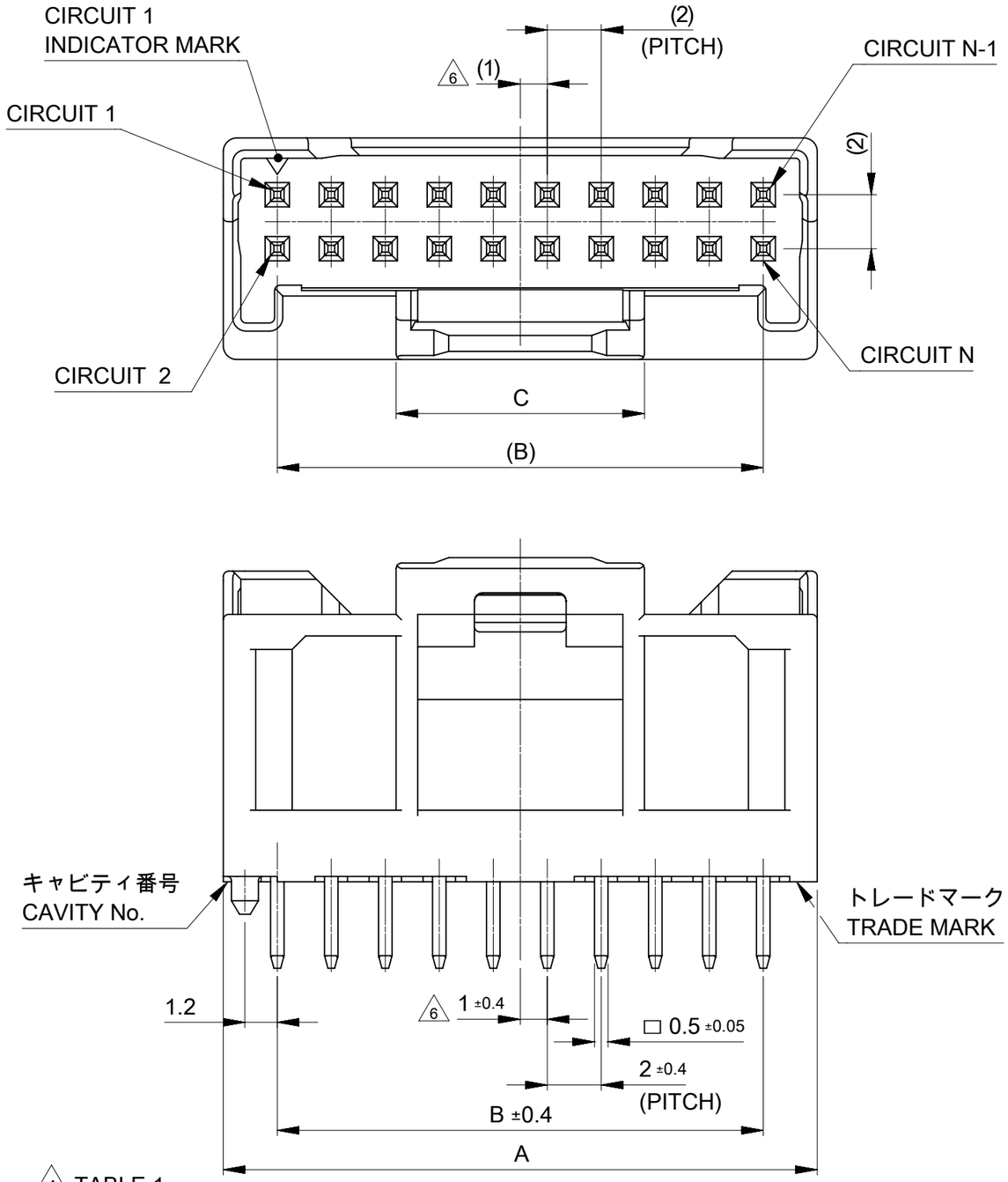

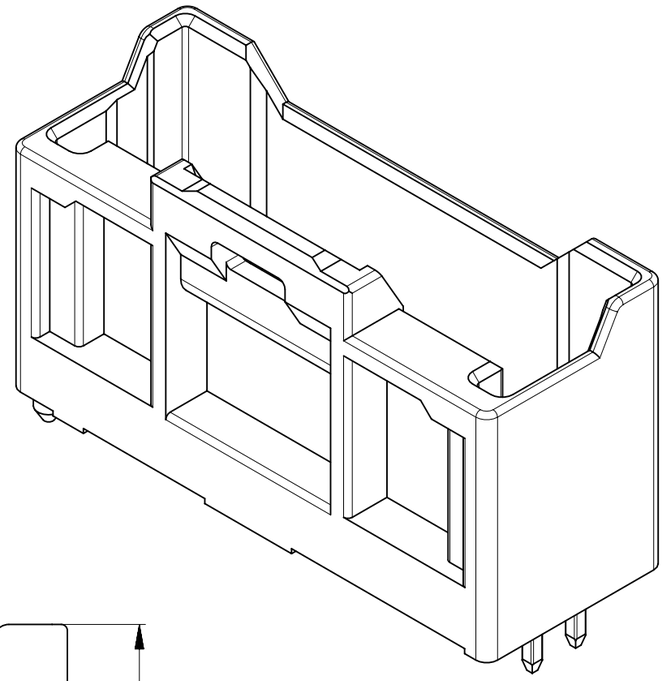

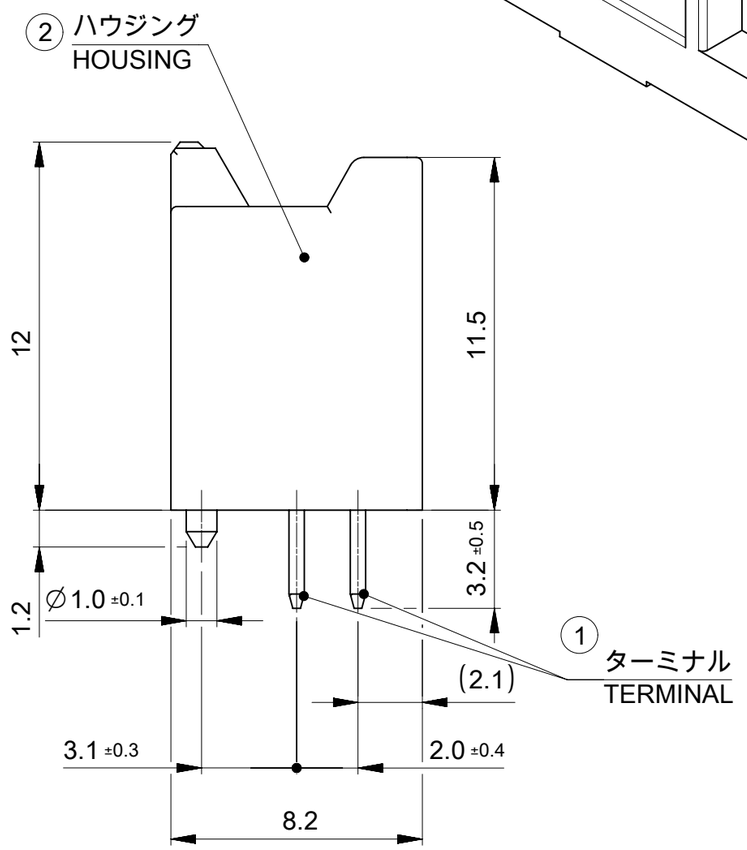

C	B	A	極数 CIRCUIT SIZE
9.2	38	42	40
9.2	36	40	38
9.2	34	38	36
9.2	32	36	34
9.2	30	34	32
9.2	28	32	30
9.2	26	30	28
9.2	24	28	26
9.2	22	26	24
9.2	20	24	22
9.2	18	22	20
9.2	16	20	18
9.2	14	18	16
9.2	12	16	14
9.2	10	14	12
7.3	8	12	10

番号 No.	部品 PART	材質 MATERIAL	
①	ターミナル TERMINAL	黄銅, BRASS	
		下地めっき UNDER PLATING	銅めっき 1.0 micro-meter MIN COPPER PLATING 1.0 micro-meter MIN
		コンタクト CONTACT	無光沢錫めっき(リフロー処理) 1.0 micro-meter MIN MATTE TIN PLATING (REFLOW TREATMENT) 1.0 micro-meter MIN
		テール SOLDER TAIL	
②	ハウジング HOUSING	ポリアミド(PA)ガラス入り, UL94V-0, 色: SEE CHART POLYAMIDE(PA) GLASS FILLED, UL94V-0, COLOR : SEE CHART	

DOCUMENT STATUS | P1 | RELEASE DATE | 2023/07/07 04:35:51

THIS DRAWING CONTAINS INFORMATION THAT IS PROPRIETARY TO MOLEX ELECTRONIC TECHNOLOGIES, LLC AND SHOULD NOT BE USED WITHOUT WRITTEN PERMISSION

DIMENSION UNITS	SCALE
mm	NTS

GENERAL TOLERANCES (UNLESS SPECIFIED)

ANGULAR TOL	±	3.0 °
4 PLACES	±	0.2
3 PLACES	±	0.2
2 PLACES	±	0.2
1 PLACE	±	0.2
0 PLACES	±	0.2

DRAFT WHERE APPLICABLE MUST REMAIN WITHIN DIMENSIONS

CURRENT REV DESC:

EC NO: 755147
DRWN: SNAKAMURA08 2023/06/27
CHK'D: MARAI 2023/07/07
APPR: AIDA 2023/07/07

INITIAL REVISION:
DRWN: SNAKAMURA08 2019/05/09
APPR: KOMURAKAMI 2019/05/24

THIRD ANGLE PROJECTION | DRAWING: A3-SIZE | SERIES: 501645

molex

IGRID 2.0 PLUG ASSEMBLY
VERTICAL TIN PLATING

PRODUCT CUSTOMER DRAWING

DOCUMENT NUMBER	DOC TYPE	DOC PART	REVISION
5016450000-SD	PSD	000	F

MATERIAL NUMBER	CUSTOMER	SHEET NUMBER
SEE SHEET 3	GENERAL	1 OF 3

FORMAT: master-ib-prod-A3
REVISION: J1
DATE: 2021/05/01

NOTES.

1. 材料及び仕上げ(めっき仕様)：TABLE 1 参照
   MATERIAL AND FINISHES : SEE TABLE 1
2. 製品仕様書：PS-501646-001
   PRODUCT SPECIFICATION:PS-501646-001
3. 嵌合相手:
   MATES WITH:

リセプタクルハウジング RECEPTACLE HOUSING	501646 SERIES	
圧着端子 RECEPTACLE CRIMP TERMINAL	AWG #22-26 錫めっき AWG #22-26 TIN PLATING	501647 SERIES
	AWG #26-28 錫めっき AWG #26-28 TIN PLATING	501648 SERIES

4. アプリケーション仕様書(コネクタ取扱い説明書)：5016460000 PS A01
   APPLICATION SPECIFICATION(CONNECTOR MANNUAL): 5016460000 PS A01
5. 本製品は錫めっき品です。
   THIS PRODUCT IS A TIN PLATING.
6. 極数/2 = 偶数に適応
   APPLY FOR CIRCUIT SIZE / 2 =EVEN
7. ターミナルに錫めっきを使用している為、外観に摺動痕が付く場合があります。
   THE WOUND OF FRICTION MIGHT ADHERE TO EXTERNALS
   BECAUSE THE TIN PLATING IS USED FOR TERMINAL.
8. 梱包仕様書: SPK-501645-001
   PACKING INFORMATION : SPK-501645-001
9. 発注番号 : SHEET 3 参照
   ORDER No. : PLEASE REFER TO SHEET 3 FOR PRODUCT LIST

501645 **2*

極数 CIRCUIT SIZE	ハウジングカラー HOUSING COLOR
	0:ナチュラル NATURAL (白 WHITE)
	1:黒 BLACK
	2:赤 RED
	4:青 BLUE
	6:緑 GREEN

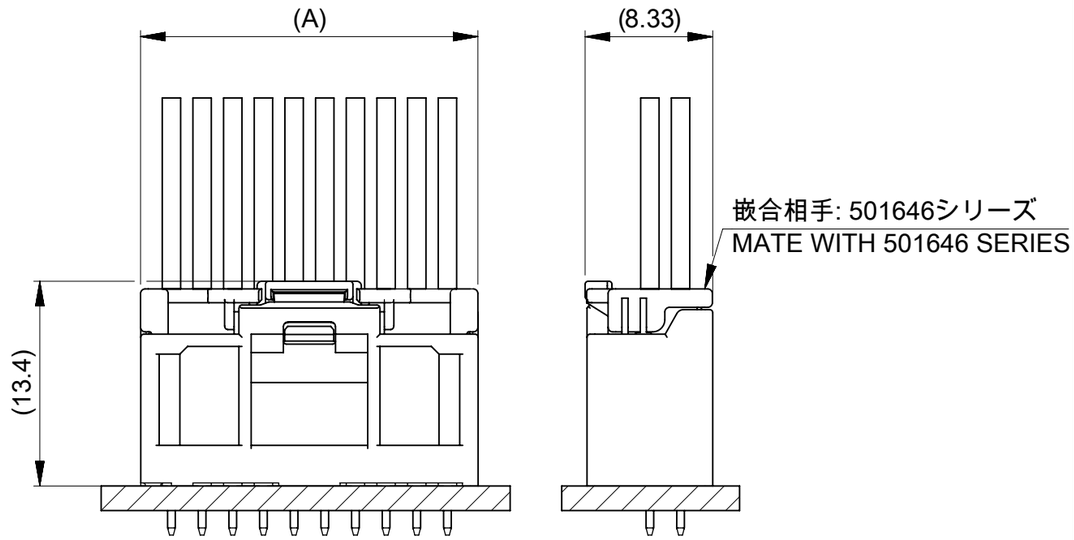

嵌合状態図
MATED CONNECTORS

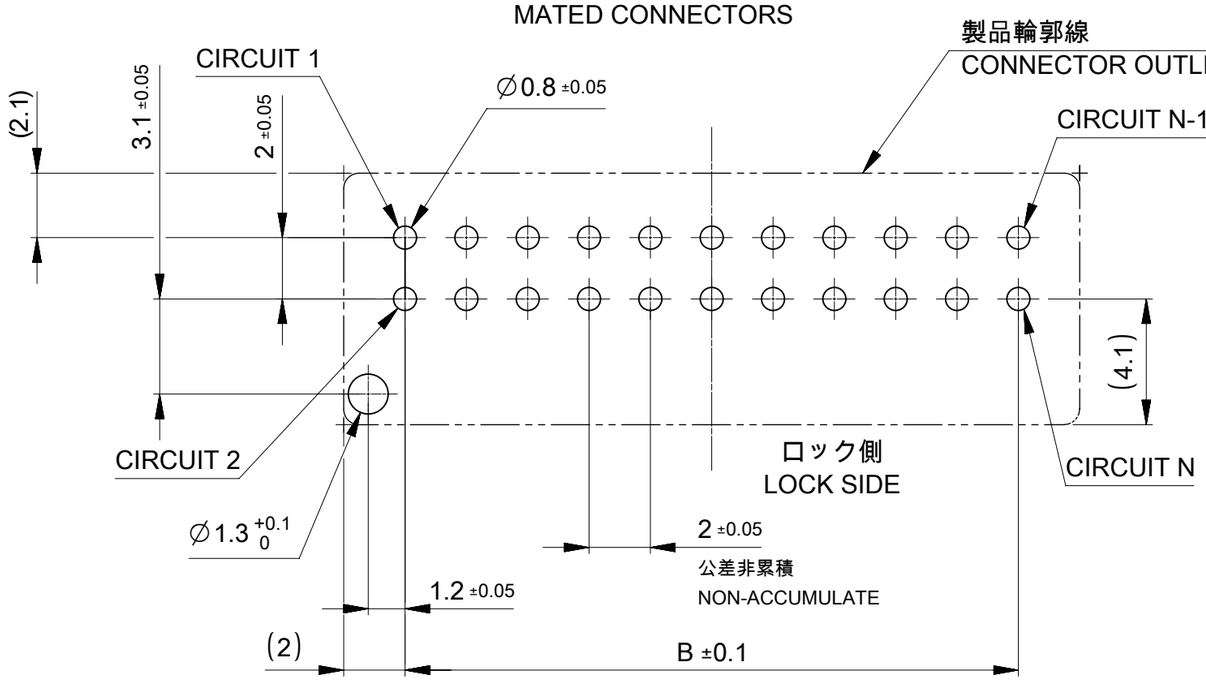

基板取付穴推奨寸法(マウント面)
POLARIZED RECOMMENDED PCB LAYOUT HOLE DIMENSION (MOUNTING SIDE)
参考基板厚 t=1.2~1.6
REFERENCE PCB THICKNESS t=1.2~1.6

THIS DRAWING CONTAINS INFORMATION THAT IS PROPRIETARY TO MOLEX ELECTRONIC TECHNOLOGIES, LLC AND SHOULD NOT BE USED WITHOUT WRITTEN PERMISSION

DIMENSION UNITS	SCALE
mm	NTS

GENERAL TOLERANCES (UNLESS SPECIFIED)

ANGULAR TOL	±	3.0 °
4 PLACES	±	0.2
3 PLACES	±	0.2
2 PLACES	±	0.2
1 PLACE	±	0.2
0 PLACES	±	0.2

DRAFT WHERE APPLICABLE MUST REMAIN WITHIN DIMENSIONS

CURRENT REV DESC:

EC NO: 755147
DRWN: SNAKAMURA08 2023/06/27
CHK'D: MARAI 2023/07/07
APPR: AIDA 2023/07/07

INITIAL REVISION:
DRWN: SNAKAMURA08 2019/05/09
APPR: KOMURAKAMI 2019/05/24

molex

IGRID 2.0 PLUG ASSEMBLY
VERTICAL TIN PLATING

PRODUCT CUSTOMER DRAWING

DOCUMENT NUMBER	DOC TYPE	DOC PART	REVISION
5016450000-SD	PSD	000	F

THIRD ANGLE PROJECTION	DRAWING	SERIES	MATERIAL NUMBER	CUSTOMER	SHEET NUMBER
	A3-SIZE	501645	SEE SHEET 3	GENERAL	2 OF 3

DOCUMENT STATUS	P1	RELEASE DATE	2023/07/07 04:35:51

FORMAT: master-lb-prod-A3
REVISION: J1
DATE: 2021/05/01

製品形状
PRODUCT SHAPE

10, 12極
10, 12CIRCUIT

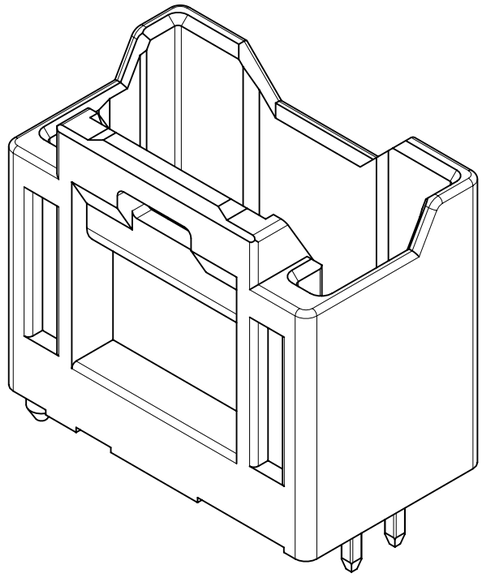

14 - 40 極
14 - 40 CIRCUIT

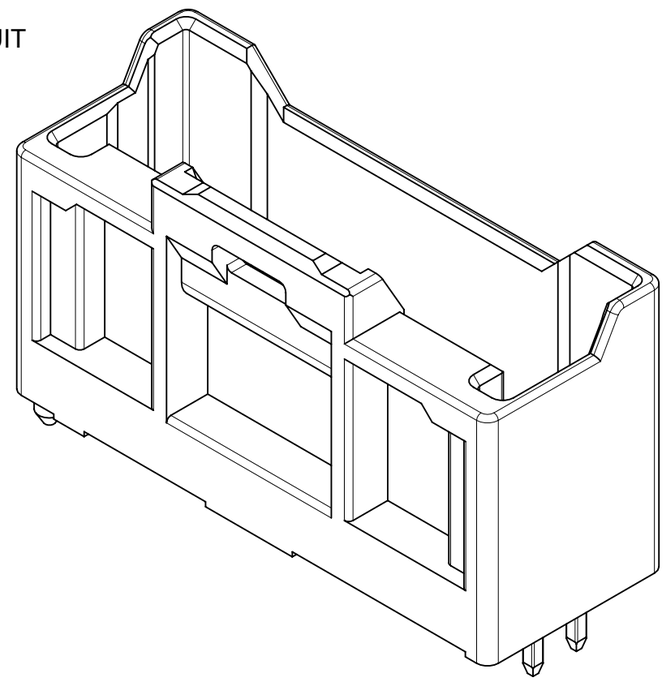

△9 製品一覧 PRODUCT LIST

緑: GREEN	青: BULE	赤: RED	黒 : BLACK	ナチュラル : NATURAL (白 : WHITE)	HOUSING COLOR
501645 4026	501645 4024	501645 4022	501645 4021	501645 4020	40
3826	3824	3822	3821	3820	38
3626	3624	3622	3621	3620	36
3426	3424	3422	3421	3420	34
3226	3224	3222	3221	3220	32
3026	3024	3022	3021	3020	30
2826	2824	2822	2821	2820	28
2626	2624	2622	2621	2620	26
2426	2424	2422	2421	2420	24
2226	2224	2222	2221	2220	22
2026	2024	2022	2021	2020	20
1826	1824	1822	1821	1820	18
1626	1624	1622	1621	1620	16
1426	1424	1422	1421	1420	14
1226	1224	1222	1221	1220	12
501645 1026	501645 1024	501645 1022	501645 1021	501645 1020	10
発注番号 ORDER No.					極数
PACKAGING STYLE : TRAY					CIRCUIT SIZE

THIS DRAWING CONTAINS INFORMATION THAT IS PROPRIETARY TO MOLEX ELECTRONIC TECHNOLOGIES, LLC AND SHOULD NOT BE USED WITHOUT WRITTEN PERMISSION

DIMENSION UNITS	SCALE
mm	NTS

GENERAL TOLERANCES (UNLESS SPECIFIED)

ANGULAR TOL	±	3.0 °
4 PLACES	±	0.2
3 PLACES	±	0.2
2 PLACES	±	0.2
1 PLACE	±	0.2
0 PLACES	±	0.2

DRAFT WHERE APPLICABLE MUST REMAIN WITHIN DIMENSIONS

CURRENT REV DESC:

EC NO: 755147
DRWN: SNAKAMURA08 2023/06/27
CHK'D: MARAI 2023/07/07
APPR: AIDA 2023/07/07

INITIAL REVISION:
DRWN: SNAKAMURA08 2019/05/09
APPR: KOMURAKAMI 2019/05/24

molex

IGRID 2.0 PLUG ASSEMBLY
VERTICAL TIN PLATING

PRODUCT CUSTOMER DRAWING

DOCUMENT NUMBER	DOC TYPE	DOC PART	REVISION
5016450000-SD	PSD	000	F

THIRD ANGLE PROJECTION	DRAWING	SERIES
	A3-SIZE	501645

MATERIAL NUMBER	CUSTOMER	SHEET NUMBER
SEE CHART	GENERAL	3 OF 3

DOCUMENT STATUS	P1	RELEASE DATE	2023/07/07 04:35:51

FORMAT: master-ib-prod-A3
REVISION: J1
DATE: 2021/05/01