| CIRCUIT SIZE | DIM. "A" | DIM. "B" | DIM. "C" |
|---|---|---|---|
| 2 | .21 (5.4) | — | .370 (9.40) |
| 4 | .38 (9.6) | .17 (4.2) | .535 (13.60) |
| 6 | .54 (13.8) | .33 (8.4) | .701 (17.80) |
| 8 | .71 (18.0) | .50 (12.6) | .866 (22.00) |
| 10 | .87 (22.2) | .66 (16.8) | 1.031 (26.20) |
| 12 | 1.04 (26.4) | .83 (21.0) | 1.197 (30.40) |
| 14 | 1.20 (30.6) | .99 (25.2) | 1.362 (34.60) |
| 16 | 1.37 (34.8) | 1.16 (29.4) | 1.528 (38.80) |
| 18 | 1.54 (39.0) | 1.32 (33.6) | 1.693 (43.00) |
| 20 | 1.70 (43.2) | 1.49 (37.8) | 1.858 (47.20) |
| 22 | 1.87 (47.4) | 1.65 (42.0) | 2.024 (51.40) |
| 24 | 2.03 (51.6) | 1.82 (46.2) | 2.189 (55.60) |

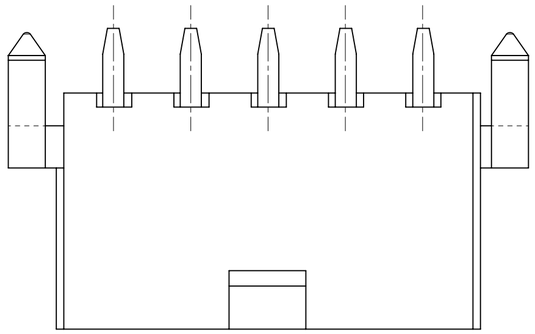

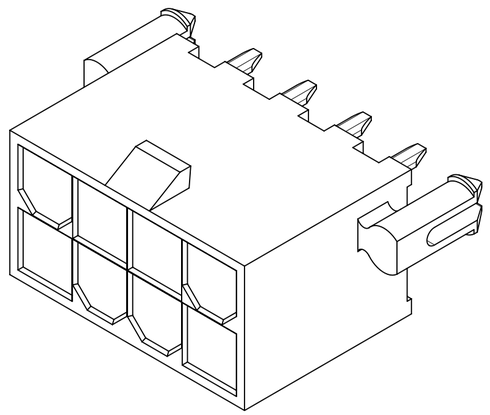

8 CKT SHOWN

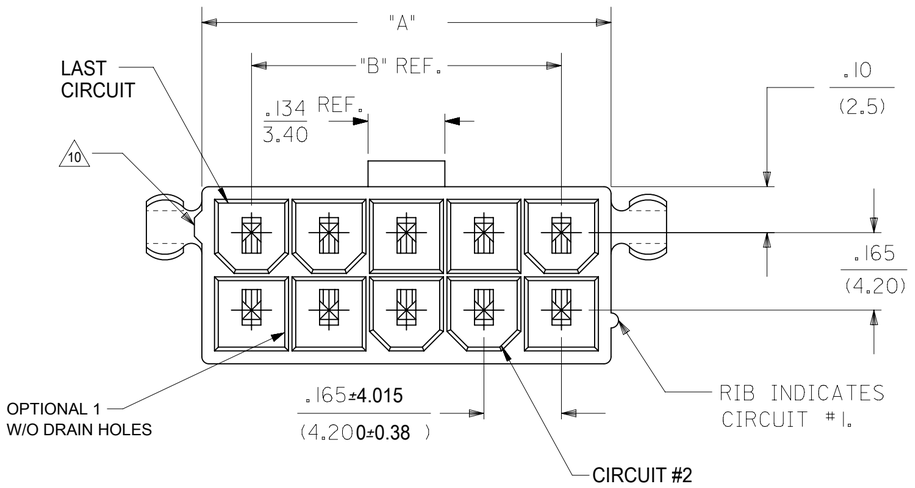


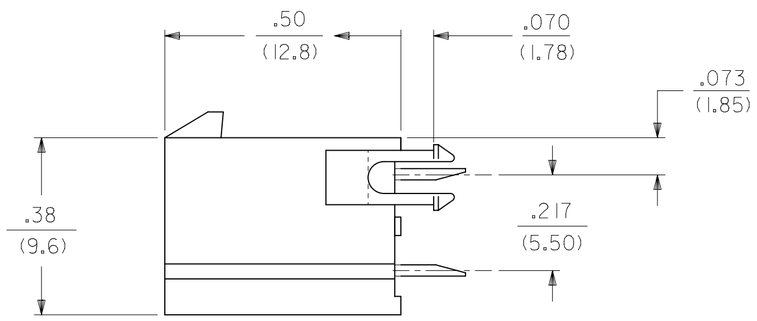


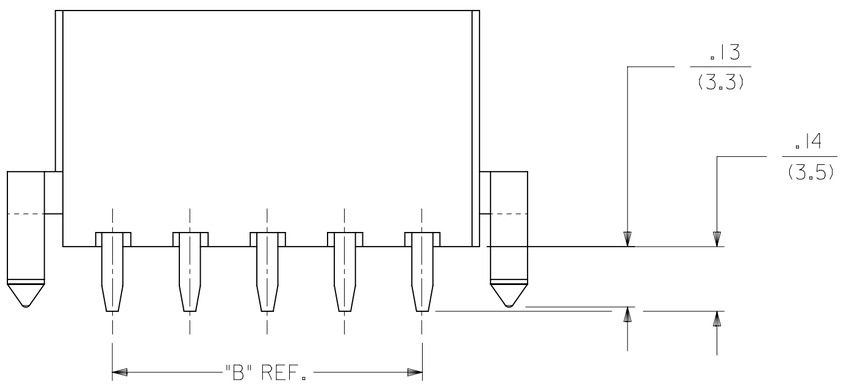


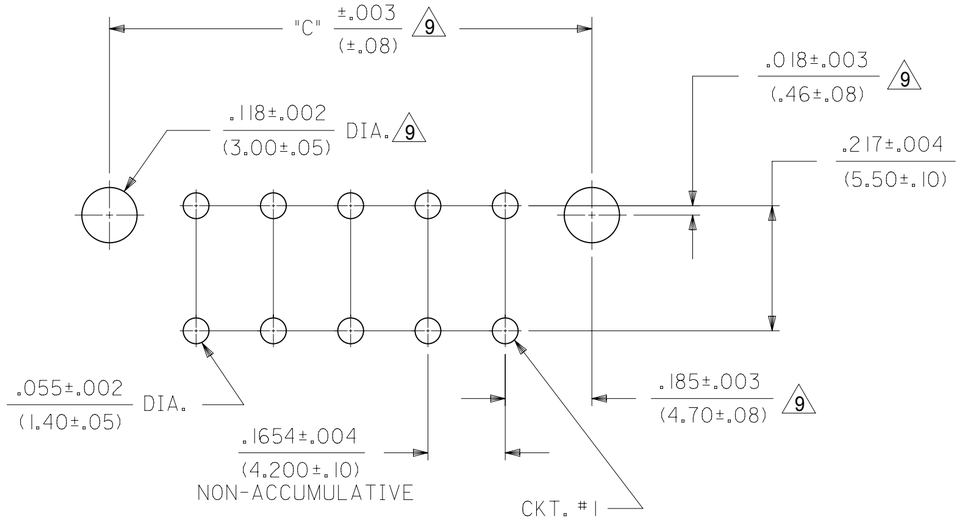


RECOMMENDED HOLE LAYOUT FOR .070/(1.78) MAX. THICK P.C. BOARD

VIEWED FROM COMPONENT SIDE

THIS DRAWING CONTAINS INFORMATION THAT IS PROPRIETARY TO MOLEX ELECTRONIC TECHNOLOGIES, LLC AND SHOULD NOT BE USED WITHOUT WRITTEN PERMISSION

| DIMENSION UNITS | SCALE |
|---|---|
| mm | NTS |

GENERAL TOLERANCES (UNLESS SPECIFIED)

| | MM | INCH |
|---|---|---|
| 4 PLACES | ± | ± |
| 3 PLACES | ± | ± 0.015 |
| 2 PLACES | ± 0.38 | ± 0.02 |
| 1 PLACE | ± 0.5 | ± |
| 0 PLACES | ± | ± |
| ANGULAR TOL | ± 0.5 ° | |

DRAFT WHERE APPLICABLE MUST REMAIN WITHIN DIMENSIONS

CURRENT REV DESC:

EC NO: 784313
DRWN: JERRYW8 2024/04/25
CHK'D: XQZHANG 2024/09/11
APPR: XQZHANG 2024/09/11

INITIAL REVISION:
DRWN: NNGUYEN 2014/04/22
APPR: FSMITH 2014/05/16

molex

MINI-FIT VERT HDR ASSY
W & W/O PEGS DUAL ROW

PRODUCT CUSTOMER DRAWING

| DOCUMENT NUMBER | DOC TYPE | DOC PART | REVISION |
|---|---|---|---|
| SD-172447-0000 | PSD | 001 | A9 |

| THIRD ANGLE PROJECTION | DRAWING | SERIES | MATERIAL NUMBER | CUSTOMER | SHEET NUMBER |
|---|---|---|---|---|---|
| | C-SIZE | 172447 | SEE CHART | GENERAL MARKET | 1 OF 3 |

| DOCUMENT STATUS | P1 | RELEASE DATE | 2024/09/11 06:39:18 |
|---|---|---|---|

FORMAT: Eng-lega-master-tb-prod-C
REVISION: E1
DATE: 2021/05/01

| TOOLED | PART NUMBER | CKT SIZE | MOUNTING OPTION | PLATING SEE NOTE 2 | COLOR |
|---|---|---|---|---|---|
| YES | 172447-0002 | 2 | WITH PEGS | TIN | BLACK |
| YES | 172447-0004 | 4 | | | |
| YES | 172447-0006 | 6 | | | |
| YES | 172447-0008 | 8 | | | |
| YES | 172447-0010 | 10 | | | |
| YES | 172447-0012 | 12 | | | |
| NO | 172447-0014 | 14 | | | |
| NO | 172447-0016 | 16 | | | |
| NO | 172447-0018 | 18 | | | |
| NO | 172447-0020 | 20 | | | |
| NO | 172447-0022 | 22 | | | |
| NO | 172447-0024 | 24 | | | |

| TOOLED | PART NUMBER | CKT SIZE | MOUNTING OPTION | PLATING SEE NOTE 2 | COLOR |
|---|---|---|---|---|---|
| YES | 172447-0202 | 2 | WITHOUT PEGS | TIN | BLACK |
| YES | 172447-0204 | 4 | | | |
| YES | 172447-0206 | 6 | | | |
| YES | 172447-0208 | 8 | | | |
| YES | 172447-0210 | 10 | | | |
| YES | 172447-0212 | 12 | | | |
| YES | 172447-0214 | 14 | | | |
| YES | 172447-0216 | 16 | | | |
| NO | 172447-0218 | 18 | | | |
| NO | 172447-0220 | 20 | | | |
| NO | 172447-0222 | 22 | | | |
| NO | 172447-0224 | 24 | | | |

| TOOLED | PART NUMBER | CKT SIZE | MOUNTING OPTION | PLATING SEE NOTE 2 | COLOR |
|---|---|---|---|---|---|
| YES | 172447-1002 | 2 | WITH PEGS | GOLD | BLACK |
| YES | 172447-1004 | 4 | | | |
| YES | 172447-1006 | 6 | | | |
| YES | 172447-1008 | 8 | | | |
| YES | 172447-1010 | 10 | | | |
| YES | 172447-1012 | 12 | | | |
| NO | 172447-1014 | 14 | | | |
| NO | 172447-1016 | 16 | | | |
| NO | 172447-1018 | 18 | | | |
| NO | 172447-1020 | 20 | | | |
| NO | 172447-1022 | 22 | | | |
| NO | 172447-1024 | 24 | | | |

| TOOLED | PART NUMBER | CKT SIZE | MOUNTING OPTION | PLATING SEE NOTE 2 | COLOR |
|---|---|---|---|---|---|
| YES | 172447-1202 | 2 | WITHOUT PEGS | GOLD | BLACK |
| YES | 172447-1204 | 4 | | | |
| YES | 172447-1206 | 6 | | | |
| YES | 172447-1208 | 8 | | | |
| YES | 172447-1210 | 10 | | | |
| YES | 172447-1212 | 12 | | | |
| YES | 172447-1214 | 14 | | | |
| YES | 172447-1216 | 16 | | | |
| NO | 172447-1218 | 18 | | | |
| NO | 172447-1220 | 20 | | | |
| NO | 172447-1222 | 22 | | | |
| NO | 172447-1224 | 24 | | | |

172447 - * * **

PLATING
SEE NOTE 2
0 = TIN PER "MS"
1 = GOLD PER "GS"

ASSEMBLY TYPE
0 = DUAL ROW W/PEGS (BLACK, V2)
1 = DUAL ROW W/PEGS (BEIGE, V2)
2 = DUAL ROW WITHOUT PEGS (BLACK, V2)
3 = DUAL ROW WITHOUT PEGS (BIEGE, V2)
4 = DUAL ROW W/PEGS (RED, V0)
5 = DUAL ROW W/PEGS (GREEN, V0)
6 = DUAL ROW W/PEGS (BLUE, V0)
7 = DUAL ROW W/PEGS (NATURAL, V0)
8 = DUAL ROW (BLACK, V0)

CIRCUIT SIZE

| TOOLED | PART NUMBER | CKT SIZE | MOUNTING OPTION | PLATING SEE NOTE 2 | COLOR |
|---|---|---|---|---|---|
| YES | 172447-0102 | 2 | WITH PEGS | TIN | BEIGE |
| YES | 172447-0104 | 4 | | | |
| YES | 172447-0106 | 6 | | | |
| YES | 172447-0108 | 8 | | | |
| YES | 172447-0110 | 10 | | | |
| YES | 172447-0112 | 12 | | | |
| NO | 172447-0114 | 14 | | | |
| NO | 172447-0116 | 16 | | | |
| NO | 172447-0118 | 18 | | | |
| NO | 172447-0120 | 20 | | | |
| NO | 172447-0122 | 22 | | | |
| NO | 172447-0124 | 24 | | | |

| TOOLED | PART NUMBER | CKT SIZE | MOUNTING OPTION | PLATING SEE NOTE 2 | COLOR |
|---|---|---|---|---|---|
| YES | 172447-0302 | 2 | WITHOUT PEGS | TIN | BIEGE |
| YES | 172447-0304 | 4 | | | |
| YES | 172447-0306 | 6 | | | |
| YES | 172447-0308 | 8 | | | |
| YES | 172447-0310 | 10 | | | |
| YES | 172447-0312 | 12 | | | |
| YES | 172447-0314 | 14 | | | |
| YES | 172447-0316 | 16 | | | |
| NO | 172447-0318 | 18 | | | |
| NO | 172447-0320 | 20 | | | |
| NO | 172447-0322 | 22 | | | |
| NO | 172447-0324 | 24 | | | |

| TOOLED | PART NUMBER | CKT SIZE | MOUNTING OPTION | PLATING SEE NOTE 2 | COLOR |
|---|---|---|---|---|---|
| YES | 172447-1302 | 2 | WITHOUT PEGS | GOLD | BIEGE |
| YES | 172447-1304 | 4 | | | |
| YES | 172447-1306 | 6 | | | |
| YES | 172447-1308 | 8 | | | |
| YES | 172447-1310 | 10 | | | |
| YES | 172447-1312 | 12 | | | |
| YES | 172447-1314 | 14 | | | |
| YES | 172447-1316 | 16 | | | |
| NO | 172447-1318 | 18 | | | |
| NO | 172447-1320 | 20 | | | |
| NO | 172447-1322 | 22 | | | |
| NO | 172447-1324 | 24 | | | |

| TOOLED | PART NUMBER | CKT SIZE | MOUNTING OPTION | PLATING SEE NOTE 2 | COLOR |
|---|---|---|---|---|---|
| YES | 172447-1102 | 2 | WITH PEGS | GOLD | BEIGE |
| YES | 172447-1104 | 4 | | | |
| YES | 172447-1106 | 6 | | | |
| YES | 172447-1108 | 8 | | | |
| YES | 172447-1110 | 10 | | | |
| YES | 172447-1112 | 12 | | | |
| NO | 172447-1114 | 14 | | | |
| NO | 172447-1116 | 16 | | | |
| NO | 172447-1118 | 18 | | | |
| NO | 172447-1120 | 20 | | | |
| NO | 172447-1122 | 22 | | | |
| NO | 172447-1124 | 24 | | | |

THIS DRAWING CONTAINS INFORMATION THAT IS PROPRIETARY TO MOLEX ELECTRONIC TECHNOLOGIES, LLC AND SHOULD NOT BE USED WITHOUT WRITTEN PERMISSION

DIMENSION UNITS: mm | SCALE: NTS

GENERAL TOLERANCES (UNLESS SPECIFIED)

| | MM | INCH |
|---|---|---|
| 4 PLACES | ± | ± |
| 3 PLACES | ± | ± 0.015 |
| 2 PLACES | ± 0.38 | ± 0.02 |
| 1 PLACE | ± 0.5 | ± |
| 0 PLACES | ± | ± |
| ANGULAR TOL | ± 0.5 ° | |

DRAFT WHERE APPLICABLE MUST REMAIN WITHIN DIMENSIONS

CURRENT REV DESC:

EC NO: 784313
DRWN: JERRYW8 2024/04/25
CHK'D: XQZHANG 2024/09/11
APPR: XQZHANG 2024/09/11

INITIAL REVISION:
DRWN: NNGUYEN 2014/04/22
APPR: FSMITH 2014/05/16

molex

MINI-FIT VERT HDR ASSY
W & W/O PEGS DUAL ROW

PRODUCT CUSTOMER DRAWING

| DOCUMENT NUMBER | DOC TYPE | DOC PART | REVISION |
|---|---|---|---|
| SD-172447-0000 | PSD | 001 | A9 |

| THIRD ANGLE PROJECTION | DRAWING | SERIES | MATERIAL NUMBER | CUSTOMER | SHEET NUMBER |
|---|---|---|---|---|---|
| | C-SIZE | 172447 | SEE CHART | GENERAL MARKET | 2 OF 3 |

| DOCUMENT STATUS | P1 | RELEASE DATE | 2024/09/11 06:39:18 |
|---|---|---|---|

FORMAT: Eng-lega-master-lib-prod-C
REVISION: E1
DATE: 2021/05/01

| | | PLATING: | TIN | PLATING: | TIN | PLATING: | TIN | PLATING: | TIN | PLATING: | TIN |
|---|---|---|---|---|---|---|---|---|---|---|---|
| | | MTG. OPTION: | WITH PEGS | MTG. OPTION: | WITH PEGS | MTG. OPTION: | WITH PEGS | MTG. OPTION: | WITH PEGS | MTG. OPTION: | WITH PEGS |
| TOOLED | CKTS | PART NO. | MATERIAL | PART NO. | MATERIAL | PART NO. | MATERIAL | PART NO. | MATERIAL | PART NO. | MATERIAL |
| YES | 2 | 1724470402 | | 1724470502 | | 1724470602 | | 1724470702 | | 1724470802 | |
| YES | 4 | 1724470404 | | 1724470504 | | 1724470604 | | 1724470704 | | 1724470804 | |
| YES | 6 | 1724470406 | 94V-0, GLOW WIRE, RED | 1724470506 | 94V-0, GLOW WIRE, GREEN | 1724470606 | 94V-0, GLOW WIRE, BLUE | 1724470706 | 94V-0, GLOW WIRE, NATURAL | 1724470806 | 94V-0, GLOW WIRE, BLACK |
| YES | 8 | 1724470408 | | 1724470508 | | 1724470608 | | 1724470708 | | 1724470808 | |
| YES | 10 | 1724470410 | | 1724470510 | | 1724470610 | | 1724470710 | | 1724470810 | |
| YES | 12 | 1724470412 | | 1724470512 | | 1724470612 | | 1724470712 | | 1724470812 | |

| | | PLATING: | TIN | PLATING: | TIN | PLATING: | TIN | PLATING: | TIN | PLATING: | TIN |
|---|---|---|---|---|---|---|---|---|---|---|---|
| | | MTG. OPTION: | WITHOUT PEGS | MTG. OPTION: | WITHOUT PEGS | MTG. OPTION: | WITHOUT PEGS | MTG. OPTION: | WITHOUT PEGS | MTG. OPTION: | WITHOUT PEGS |
| TOOLED | CKTS | PART NO. | MATERIAL | PART NO. | MATERIAL | PART NO. | MATERIAL | PART NO. | MATERIAL | PART NO. | MATERIAL |
| YES | 2 | 1724479402 | | 1724479502 | | 1724479602 | | 1724479702 | | 1724479802 | |
| YES | 4 | 1724479404 | | 1724479504 | | 1724479604 | | 1724479704 | | 1724479804 | |
| YES | 6 | 1724479406 | 94V-0, GLOW WIRE, RED | 1724479506 | 94V-0, GLOW WIRE, GREEN | 1724479606 | 94V-0, GLOW WIRE, BLUE | 1724479706 | 94V-0, GLOW WIRE, NATURAL | 1724479806 | 94V-0, GLOW WIRE, BLACK |
| YES | 8 | 1724479408 | | 1724479508 | | 1724479608 | | 1724479708 | | 1724479808 | |
| YES | 10 | 1724479410 | | 1724479510 | | 1724479610 | | 1724479710 | | 1724479810 | |
| YES | 12 | 1724479412 | | 1724479512 | | 1724479612 | | 1724479712 | | 1724479812 | |

NOTES:
1. MATERIALS:
   HOUSING:
   225S = NYLON 6, UL94V-2, GLOW WIRE, COLOR: BLACK
   225NS = NYLON 6/6, UL94V-2, GLOW WIRE, COLOR: BIEGE
   250RS = NYLON 6/6, UL94V-0, GLOW WIRE, COLOR: RED
   250GS = NYLON 6/6, UL94V-0, GLOW WIRE, COLOR: GREEN
   250BS = NYLON 6/6, UL94V-0, GLOW WIRE, COLOR: BLUE
   250WS = NYLON 6/6, UL94V-0, GLOW WIRE, COLOR: NATURAL
   SC21 = NYLON 6/6, UL94V-0, GLOW WIRE, COLOR: BLACK
   TERMINALS:
   BRASS
2. TERMINAL PLATING:
   GOLD =.000030/(0.00076) MIN. SELECT GOLD AND
   .000100/(0.00254) MIN. SELECT MATTE TIN OVER
   .000050/(0.00127) MIN. NICKEL OVERALL
   TIN =.000100/(0.00254) MIN. MATTE TIN OVER
   .000050/(0.00127) MIN. NICKEL
3. PRODUCT SPECIFICATION: PS-5556-001
4. PACKAGING: TRAY PACKED PER PK-5566-001
5. PART MATES WITH MINI-FIT JR. RECEPTACLE NO. 46992.
6. PART CONFORMS TO CLASS "B" REQUIREMENTS OF COSMETIC SPECIFICATION PS-45499-002 WITH THE EXCEPTION OF DISCOLORATION, FLASH AND SINK ON THE HOUSING MEET CLASS "C: REQUIREMENTS.
7. PART IS NOT DESIGNED FOR CURRENT SHARING.
8. PARTS ARE NOT DESIGNED TO BE MATED OR UN-MATED WHILE CIRCUITS ARE LIVE.
9 LOCATION OF .118.002/(3.000.05) DIAMETER HOLES ON P.C. BOARD IS FOR OPTIONAL PEGS.
10 ANTI-SHINGLING RIB MAY OR MAY NOT APPEAR ON HOUSINGS.
11. APPLICATION SPECIFICATION : 469920000-AS

172447 - * * **

PLATING
SEE NOTE 2
0 = TIN PER "MS"
1 = GOLD PER "GS"

ASSEMBLY TYPE
0 = DUAL ROW W/PEGS (BLACK, V2)
1 = DUAL ROW W/PEGS (BEIGE, V2)
2 = DUAL ROW WITHOUT PEGS (BLACK, V2)
3 = DUAL ROW WITHOUT PEGS (BIEGE, V2)
4 = DUAL ROW W/PEGS (RED, V0)
5 = DUAL ROW W/PEGS (GREEN, V0)
6 = DUAL ROW W/PEGS (BLUE, V0)
7 = DUAL ROW W/PEGS (NATURAL, V0)
8 = DUAL ROW (BLACK, V0)

CIRCUIT SIZE

THIS DRAWING CONTAINS INFORMATION THAT IS PROPRIETARY TO MOLEX ELECTRONIC TECHNOLOGIES, LLC AND SHOULD NOT BE USED WITHOUT WRITTEN PERMISSION

| DIMENSION UNITS | SCALE |
|---|---|
| mm | NTS |

GENERAL TOLERANCES (UNLESS SPECIFIED)

| | MM | INCH |
|---|---|---|
| 4 PLACES | ± | ± |
| 3 PLACES | ± | ± 0.015 |
| 2 PLACES | ± 0.38 | ± 0.02 |
| 1 PLACE | ± 0.5 | ± |
| 0 PLACES | ± | ± |
| ANGULAR TOL | ± 0.5 ° | |

DRAFT WHERE APPLICABLE MUST REMAIN WITHIN DIMENSIONS

CURRENT REV DESC:

EC NO: 784313
DRWN: JERRYW8 2024/04/25
CHK'D: XQZHANG 2024/09/11
APPR: XQZHANG 2024/09/11

INITIAL REVISION:
DRWN: NNGUYEN 2014/04/22
APPR: FSMITH 2014/05/16

molex

MINI-FIT VERT HDR ASSY
W & W/O PEGS DUAL ROW

PRODUCT CUSTOMER DRAWING

| DOCUMENT NUMBER | DOC TYPE | DOC PART | REVISION |
|---|---|---|---|
| SD-172447-0000 | PSD | 001 | A9 |

| THIRD ANGLE PROJECTION | DRAWING | SERIES | MATERIAL NUMBER | CUSTOMER | SHEET NUMBER |
|---|---|---|---|---|---|
| | C-SIZE | 172447 | | GENERAL MARKET | 3 OF 3 |

| DOCUMENT STATUS | P1 | RELEASE DATE | 2024/09/11 06:39:18 |
|---|---|---|---|

FORMAT: Eng-lega-master-lb-prod-C
REVISION: E1
DATE: 2021/05/01