LF21215TMR

TMR Omni-polar Switch 17 Gauss 1.5uA PushPull Sensor

RoHS



Functional Block Diagram

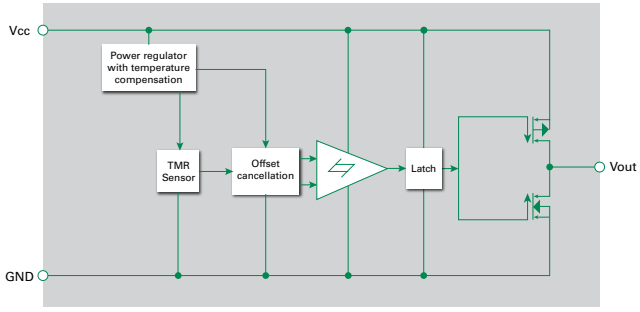

TMR Switch Typical Applications Circuit

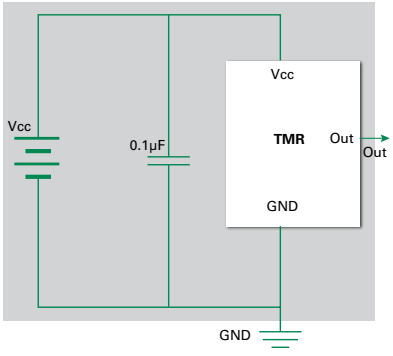

Note: It is strongly recommended that an external bypass capacitor be connected in-close-proximity to the device between the supply and ground pins to reduce noise. The recommended value for the external bypass capacitor is 0.1µF.

Description

The LF21215TMR TMR Switch is a digital omni-polar magnetic switch that integrates TMR and CMOS technology in order to provide a magnetically triggered digital switch with high sensitivity, high speed, and low power consumption.

It contains a TMR magnetic sensor and CMOS signal processing circuitry within the same package, including an on-chip TMR voltage generator for precise magnetic sensing, a TMR voltage amplifier and comparator plus a Schmitt trigger to provide switching hysteresis for noise rejection, CMOS push-pull output and X axis sensing direction.

An internal band gap regulator is used to provide a temperature compensated supply voltage for internal circuits, permitting a wide range of supply voltages.

It draws only 1.5µA (see Features below) resulting in low power operation, additionally it has fast response, accurate switching points, excellent thermal stability, and immunity to stray field interference. It is available in the SOT23-3 package. The output of the LF21215TMR switches low (turns on) when the magnetic field parallel to the sensing axis exceeds the operate point threshold, BOP. When the magnetic field is reduced below the release point BRP device output switches high (turns off). The difference between the BOP and the BRP is the hysteresis BH of the device.

Features and Benefits

- Tunneling Magnetoresistance (TMR) Technology
- Low Power Consumption at 1.5µA
- X axis sensing direction
- High Frequency up to 1kHz
- Operation with North or South Pole
- 1.8V to 5.5V Operating Range
- Low switching points for high sensitivity
- Excellent thermal stability
- High tolerance to external magnetic field interference
- Wider airgap capability
- Operates with smaller magnets for cost reduction
- RoHS compliant

Applications

- Proximity detection
- Utility meters including gas, water, electric, and heat meters
- High speed sensing
- Low power applications
- Rotary sensing

Output Behavior Versus Magnetic Pole

Parameter	Test Conditions	Output (volts)
South Pole	$B > B_{OPS}$	Low (On)
	$0 < B < B_{RPS}$	High (Off)
North Pole	$B < B_{OPN}$	Low (On)
	$0 > B > B_{RPN}$	High (Off)

Note: When power is turned on under Zero magnetic field, the output is "High".

© 2022 Littelfuse, Inc.
Specifications are subject to change without notice.
Revised: GD. 05/16/22

LF21215TMR

TMR Omni-polar Switch 17 Gauss 1.5uA PushPull Sensor

Absolute Maximum Ratings (@TA = +25°C, unless otherwise specified)

Symbol	Characteristics	Values	Unit
V_{CC}	Supply Voltage	7.0	V
V_{RCC}	Reverse Supply Voltage	0.3	V
$I_{OUTSINK}$	Output Current	9.0	mA
B	Magnetic Flux Density	4000	Gauss
V_{ESD}	ESD level(HBM)	4	kV
T_A	Operating Temperature	-40 ~ 125	°C
T_{stg}	Storage Temperature	-50 ~ 150	°C

Note: Stresses greater than the 'Absolute Maximum Ratings' specified above may cause permanent damage to the device. These are stress ratings only; functional operation of the device at these or any other conditions exceeding those indicated in this specification is not implied. Device reliability may be affected by exposure to absolute maximum rating conditions for extended periods of time.

Electrical Characteristics (@TA = +25°C, Vcc = 3.0V)

Symbol	Characteristics	Min.	Typ.	Max.	Unit	Conditions
V_{CC}	Supply Voltage	1.8	3.0	5.5	V	Operating
V_{OH}	Output High Voltage	Vcc -0.3		Vcc	V	
V_{OL}	Output Low Voltage	0		0.2	V	
Icc	Supply Current	0.5	1.5	2.0	μA	Output Open
Freq	Response Frequency		1.0		kHz	

Magnetic Characteristics (@TA = +25°C, Vcc = 3.0V)

Symbol	Characteristics	Min.	Typ.	Max.	Unit
B_{OPS}	Operation Point	10	17	25	Gauss
B_{OPN}		-25	-17	-10	Gauss
B_{RPS}	Release Point	5	10	20	Gauss
B_{RPN}		-20	-10	-5	Gauss
B_H	Hysteresis	--	7	--	Gauss

© 2022 Littelfuse, Inc.
Specifications are subject to change without notice.
Revised: GD. 05/16/22

LF21215TMR

TMR Omni-polar Switch 17 Gauss 1.5uA PushPull Sensor

Pin Configuration and Sensing Direction of Magnetic Field

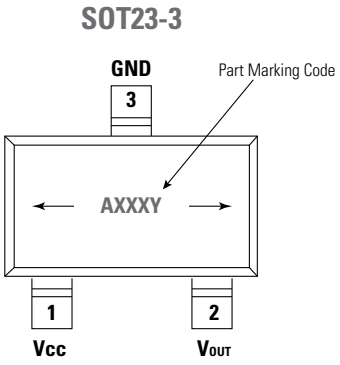

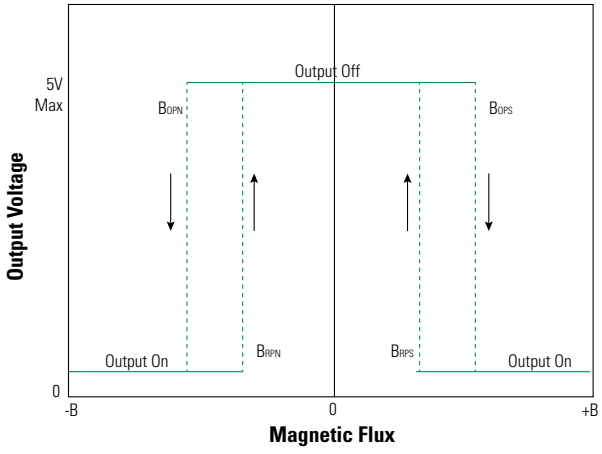

Part Marking Code:
Axxxy: A = LF21215TMR; xxx = Julian manufactured date; y = manufactured year

Pin Name	Pin No. SOT23-3	Pin Function
Vout	2	Output
GND	3	Ground
Vcc	1	Supply Voltage

Moisture Sensitivity Level: Rating is 3
Pick and Place Nozzle: Samsung CN140 or equivalent

Part Numbering System

LF - X - X - X - X - X TMR

Littelfuse Brand

Switch Type
Type 1 = Bipolar
2 = Omnipolar
3 = Unipolar

Output
1 = PushPull
2 = Open Drain

Quiescent Current
1 = 200nA
2 = 1.5uA
3 = 0.6mA

Tunneling Magnetoresistance Technology Switch

Sensitivity Gauss
1 = 5 Gauss
2 = 7 Gauss
3 = 10 Gauss
4 = 14 Gauss
5 = 17 Gauss

Sensing Axis
1 = X axis
2 = Y axis
3 = Z axis

Example: LF11115 is Bipolar, Push Pull, 200 nA, X axis, 17 Gauss.
Note: Every combination is NOT offered. Contact Littelfuse for availability.

© 2022 Littelfuse, Inc.
Specifications are subject to change without notice.
Revised: GD. 05/16/22

LF21215TMR

TMR Omni-polar Switch 17 Gauss 1.5uA PushPull Sensor

Soldering Profile for Lead-free packages

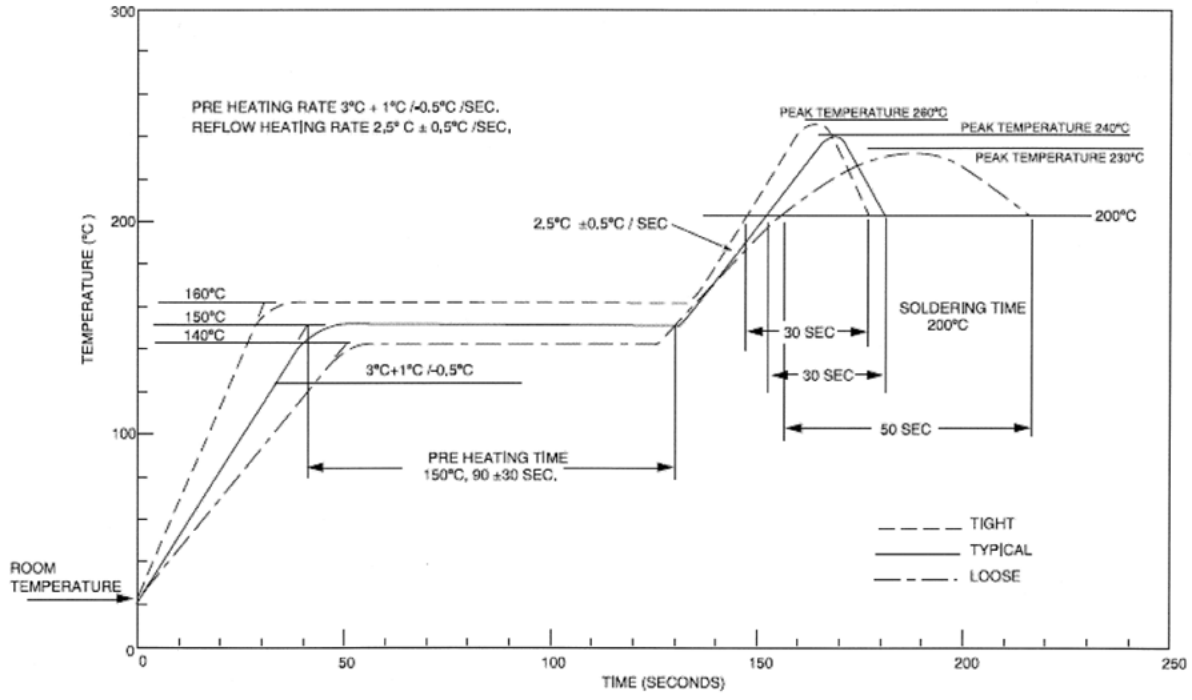

Tape and Reel

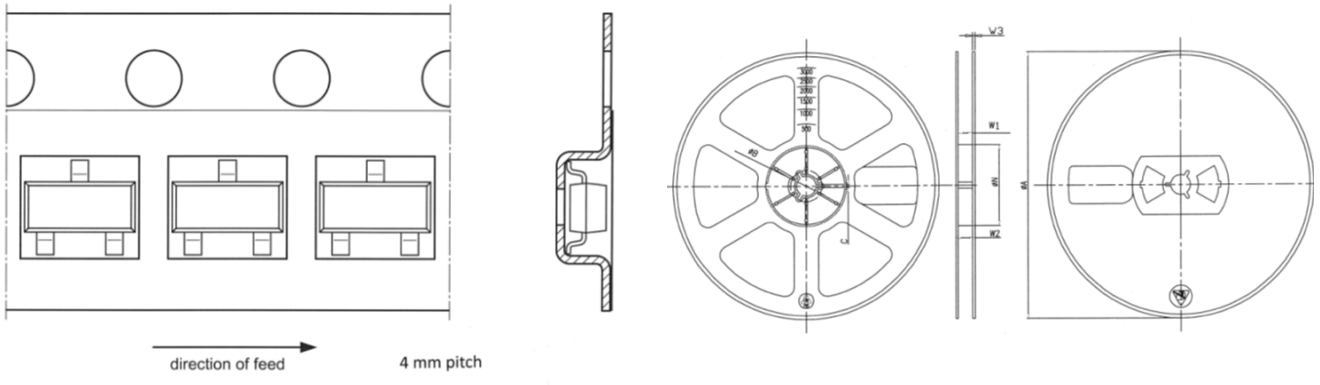

ØA	ØN	ØB	C	W1	W2	W3
178±2	54±2	13.2±0.3	2.2±0.3	8.4±1.5/0.0	12 MAX	1.4±0.4

© 2022 Littelfuse, Inc.
Specifications are subject to change without notice.
Revised: GD. 05/16/22

LF21215TMR

TMR Omni-polar Switch 17 Gauss 1.5uA PushPull Sensor

Package Information (SOT23-3 package drawing)

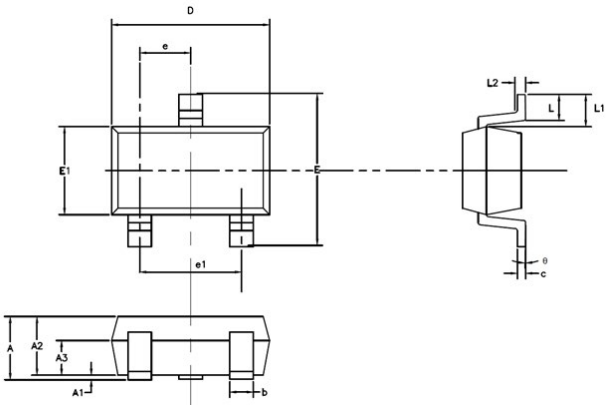

Symbol	Dimensions in Millimeters			Dimensions in Inches		
	Min	Nom	Max	Min	Nom	Max
A	-	-	1.45	-	-	0.057
A1	0.00	-	0.15	0.000	-	0.006
A2	0.90	1.10	1.30	0.035	0.043	0.051
A3	0.60	0.65	0.70	0.024	0.026	0.028
b	0.39	-	0.49	0.015	-	0.019
c	0.12	-	0.19	0.005	-	0.007
D	2.85	2.95	3.05	0.112	0.116	0.120
E	2.60	2.80	3.00	0.102	0.110	0.118
E1	1.55	1.65	1.75	0.061	0.065	0.069
e	0.85	0.95	1.05	0.033	0.037	0.041
e1	1.80	1.90	2.00	0.071	0.075	0.079
L	0.35	0.45	0.60	0.014	0.018	0.024
L1		0.59REF			0.023REF	
L2		0.25BSC			0.01BSC	
Ø	0^0	-	8^0	0^0	-	8^0

TMR Sensor Position (SOT23-3 Elements Position)

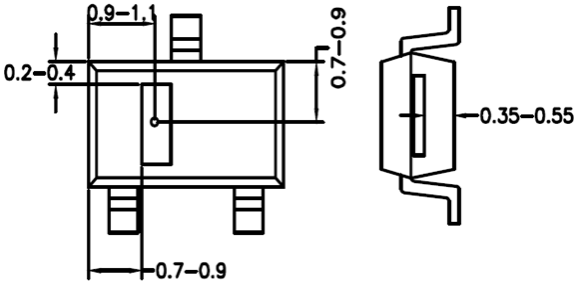

Important Notice - Littelfuse products are not designed for, and shall not be used for, any purpose (including, without limitation, automotive, military, aerospace, medical, life-saving, life-sustaining or nuclear facility applications, devices intended for surgical implant into the body, or any other application in which the failure or lack of desired operation of the product may result in personal injury, death, or property damage) other than those expressly set forth in applicable Littelfuse product documentation. Warranties granted by Littelfuse shall be deemed void for products used for any purpose not expressly set forth in applicable Littelfuse documentation. Littelfuse shall not be liable for any claims or damages arising out of products used in applications not expressly intended by Littelfuse as set forth in applicable Littelfuse documentation. The sale and use of Littelfuse products is subject to Littelfuse Terms and Conditions of Sale, unless otherwise agreed by Littelfuse.

Disclaimer Notice - Information furnished is believed to be accurate and reliable. However, users should independently evaluate the suitability of and test each product selected for their own applications. Littelfuse products are not designed for, and may not be used in, all applications. Read complete Disclaimer Notice at: www.littelfuse.com/disclaimer-electronics.

© 2022 Littelfuse, Inc.
Specifications are subject to change without notice.
Revised: GD. 05/16/22