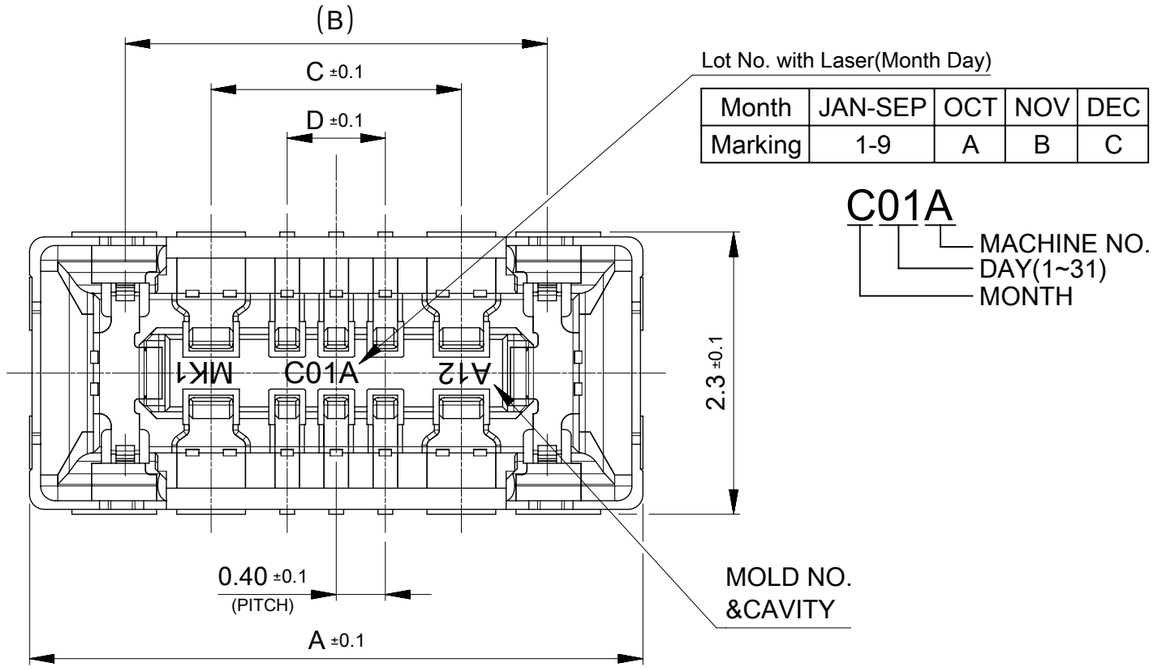

NOTES

1. MATERIAL
   HOUSING : LIQUID CRYSTAL POLIMER UL94V-0 (COLOR : BLACK)
   TERMINAL : COPPER ALLOY
   FITTING NAIL : COPPER ALLOY
2. PLATING
   TERMINAL :
   CONTACT AREA : SEPERATED GOLD PLATING(0.1㎛ MINIMUM)
   SOLDER TAIL AREA : SEPERATED GOLD PLATING(0.05㎛ MINIMUM)
   UNDER PLATING : NICKEL OVERALL(1.0㎛ MINIMUM)
   * DIVIED INTO PARTS THE GOLD PLATING OF THE CONTACT AND THE TAIL PART BY THE NICKEL PLATING.
   FITTING NAIL :
   CONTACT AREA : SEPERATED GOLD PLATING(0.1㎛ MINIMUM)
   SOLDER TAIL AREA : SEPERATED GOLD PLATING(0.05㎛ MINIMUM)
   UNDER PLATING : NICKEL OVERALL(1.0㎛ MINIMUM)
   * DIVIED INTO PARTS THE GOLD PLATING OF THE CONTACT AND THE TAIL PART BY THE NICKEL PLATING.
3. MATE WITH : 2166560**0
4. TAIL AND FITTING NAIL COPLANARITY TO BE 0.08 MAXIMUM.
5. PROHIBITED AREA OF PATTERN WIRING AND SOLDER.
   (FOR EACH AREA, THE WIRING THAT TOUCHES ON THE SOLDER CAN BE ATTACHED, THEN COVERED WITH A FILM TO KEEP SOLDER OUT)

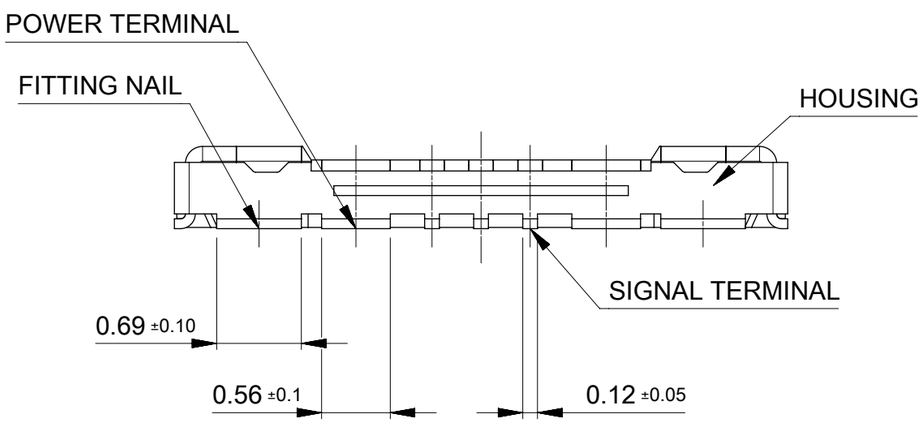

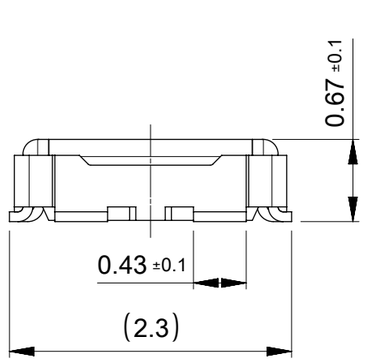

0.80	2.04	3.44	5.00	2166560109	O	---	6+4P
D	C	(B)	A	EMBOSSED TAPE PACKAGE	HIGH VOL. TOOL	LOW VOL. TOOL	Ckts
				ORDER No.	SAMPLE PREPARATION O : TOOLED □ : WORK PROCESS --- : TOOLING TO BE CONFIRMED		

CONNECTOR SERIES No. : 2166560**0

THIS DRAWING CONTAINS INFORMATION THAT IS PROPRIETARY TO MOLEX ELECTRONIC TECHNOLOGIES, LLC AND SHOULD NOT BE USED WITHOUT WRITTEN PERMISSION

FUNCTIONAL SYMBOLS
FA = 0
FC = 0
FP = 0

DIVISIONAL SYMBOLS

DIMENSION UNITS: mm
SCALE: 20:1

GENERAL TOLERANCES (UNLESS SPECIFIED)

ANGULAR TOL	± 3.0 °
4 PLACES	± 0.1
3 PLACES	± 0.1
2 PLACES	± 0.1
1 PLACE	± 0.1
0 PLACES	± 0.2

DRAFT WHERE APPLICABLE MUST REMAIN WITHIN DIMENSIONS

CURRENT REV DESC:

EC NO: 746459
DRWN: JHCHANG 2022/06/30
CHK'D: JBJIN 2023/04/19
APPR: JBJIN 2023/04/20

INITIAL REVISION:
DRWN: JHCHANG 2020/10/26
APPR: SHCHU 2021/09/03

THIRD ANGLE PROJECTION
DRAWING: A3-SIZE
SERIES: 216656

molex

0.4 BB CONN. H=0.7 NEW GCB7 REC ASSY FOR BATTERY(15A)

PRODUCT CUSTOMER DRAWING

DOCUMENT NUMBER	DOC TYPE	DOC PART	REVISION
2166560100-SD	PSD	001	A3

MATERIAL NUMBER	CUSTOMER	SHEET NUMBER
SEE CHART	GENERAL	1 OF 2

DOCUMENT STATUS	P1	RELEASE DATE	2023/04/20 00:36:36

FORMAT: B-PS-A3
REVISION: J
DATE: 2020/01/1

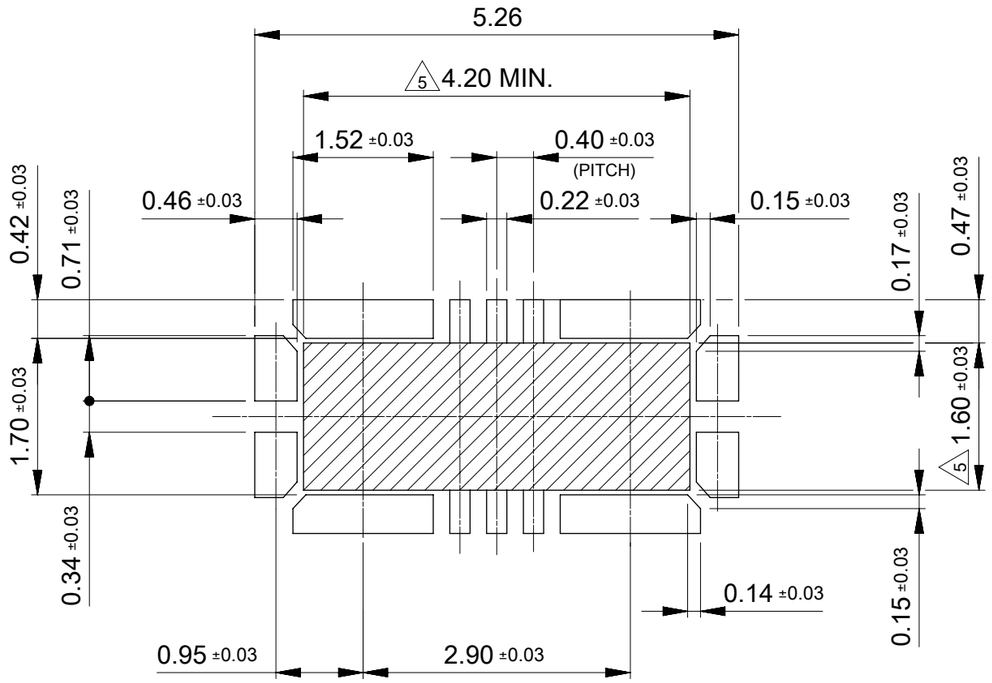

RECOMMENDED P.C.BOARD PATTERN LAYOUT
(FOR REFERENCE)

SOLDERING PROHIBITED AREA.
WHEN WIRING IS LOCATED,
THE WIRING MUST BE MASKED BY COVER LAY OR RESIST FILM.

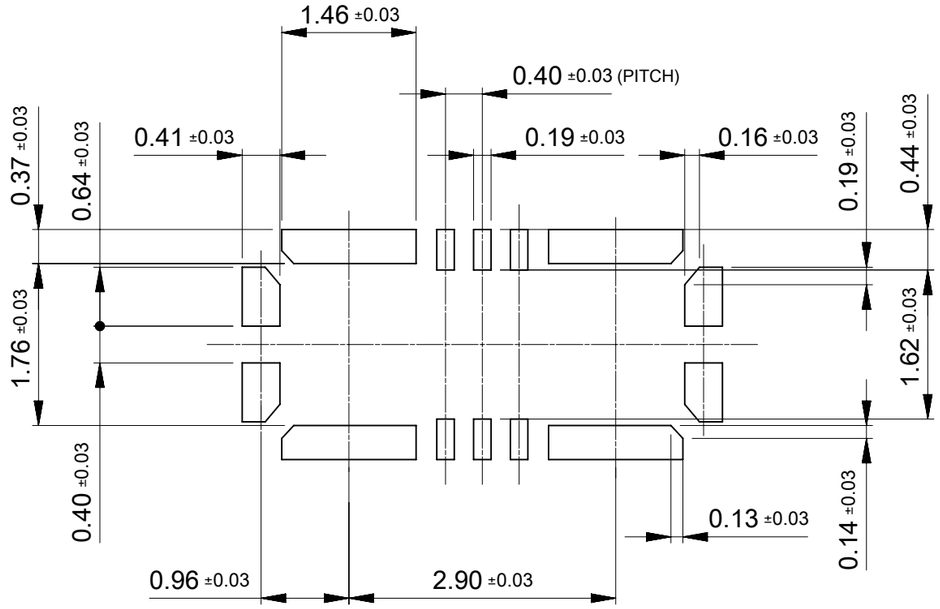

RECOMMENDED METAL MASK LAYOUT
(FOR REFERENCE)

RECOMMENDED THICKNESS : 0.08mm
RECOMMENDED APERTURE DIMENSION IS JUST SAME AS SHOWN FIGURE ABOVE.
FOR THIS DIMENSION, APERTURE RATIO ARE POWER, SIGNAL TERMINAL AND FITTING NAIL ALL 80%.

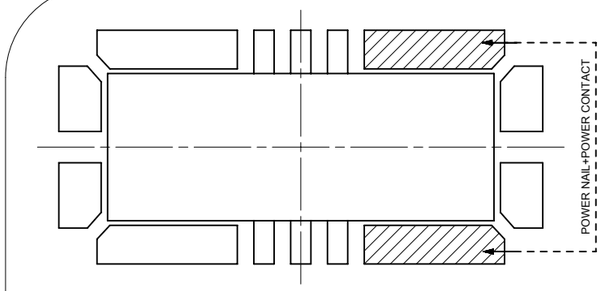

[CONDITIONS FOR USING 15A(O) AVAILABLE]
: POWER NAIL & POWER CONTACT
MUST BE SHORTED IN PATTERN.

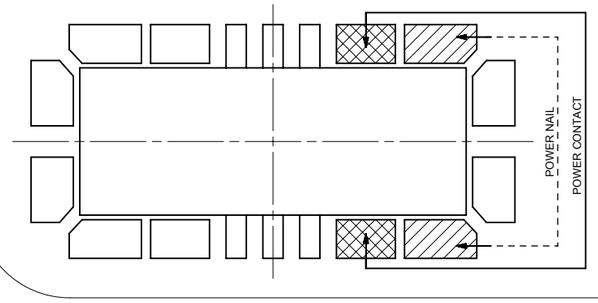

[CONDITIONS FOR USING 10Pin, 15A(X) NOT AVAILABLE]
: POWER NAIL & POWER CONTACT
MUST BE SEPARATED IN PATTERN.
※ FOR USING 10PIN
PLEASE CONTACT THE PERSON IN CHARGE OF MOLEX.

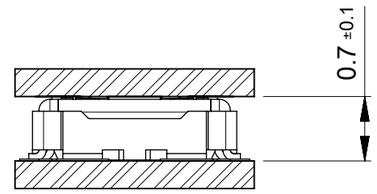

MATING CONDITION

THIS DIMENSION SHOWS A DIMENSION
BETWEEN THE TAIL TO TAIL.

THIS DRAWING CONTAINS INFORMATION THAT IS PROPRIETARY TO MOLEX ELECTRONIC TECHNOLOGIES, LLC AND SHOULD NOT BE USED WITHOUT WRITTEN PERMISSION

FUNCTIONAL SYMBOLS	FA = 0, FC = 0, FP = 0
DIVISIONAL SYMBOLS	
DIMENSION UNITS	mm
SCALE	15:1
GENERAL TOLERANCES (UNLESS SPECIFIED)	
ANGULAR TOL	± 3.0 °
4 PLACES	± 0.1
3 PLACES	± 0.1
2 PLACES	± 0.1
1 PLACE	± 0.1
0 PLACES	± 0.2
DRAFT WHERE APPLICABLE MUST REMAIN WITHIN DIMENSIONS	
CURRENT REV DESC:	
EC NO:	746459
DRWN: JHCHANG	2022/06/30
CHK'D: JBJIN	2023/04/19
APPR: JBJIN	2023/04/20
INITIAL REVISION:	
DRWN: JHCHANG	2020/10/26
APPR: SHCHU	2021/09/03
THIRD ANGLE PROJECTION	
DRAWING	A3-SIZE
SERIES	216656

molex

0.4 BB CONN. H=0.7 NEW GCB7 REC ASSY
FOR BATTERY(15A)

PRODUCT CUSTOMER DRAWING

DOCUMENT NUMBER	DOC TYPE	DOC PART	REVISION
2166560100-SD	PSD	001	A3

MATERIAL NUMBER	CUSTOMER	SHEET NUMBER
SEE CHART	GENERAL	2 OF 2

DOCUMENT STATUS	P1	RELEASE DATE	2023/04/20 00:36:36

FORMAT: master-sheet-A3
REVISION: J
DATE: 2020/01/14

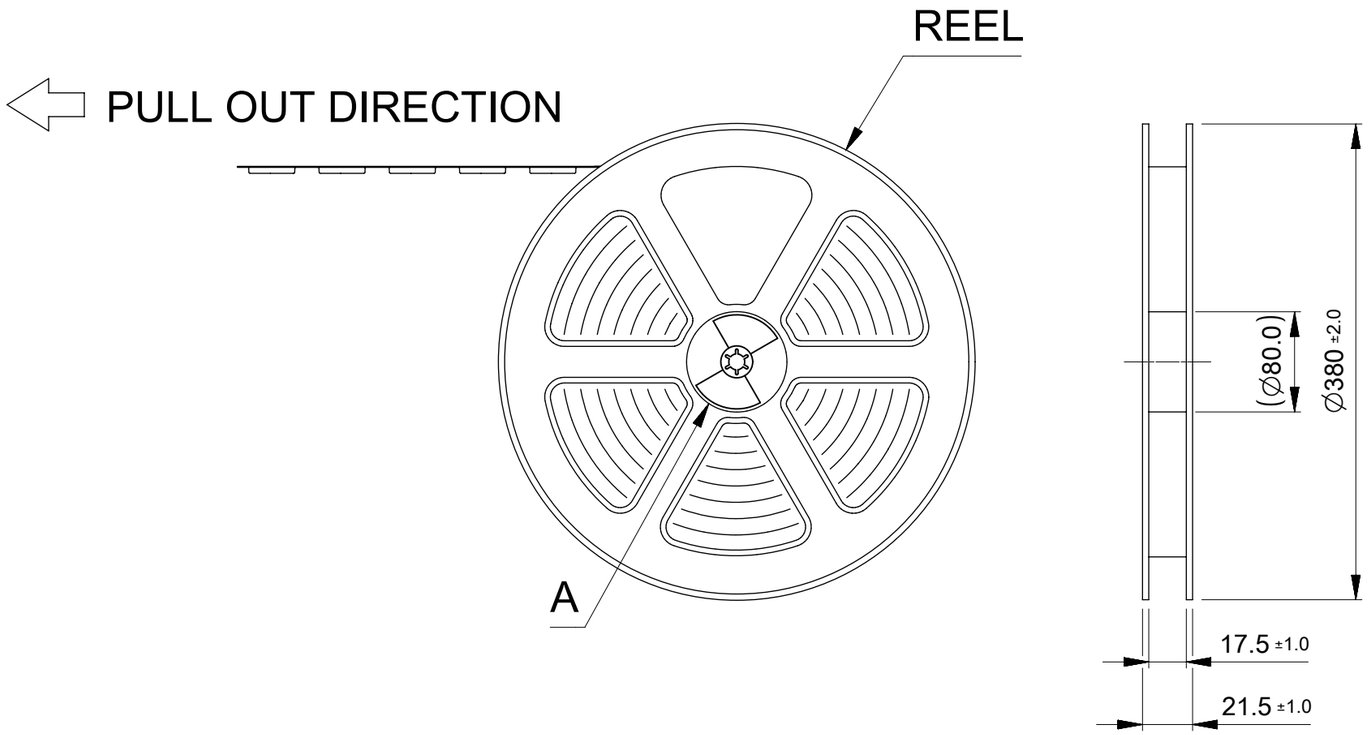

NOTES
1. RE DETAILED DIMESION, SEE PRODUCT DRAWING.
2. NUMBER OF CONNECTORS : 15,000PCS/REEL
3. LEAD TAPE LENGTH :

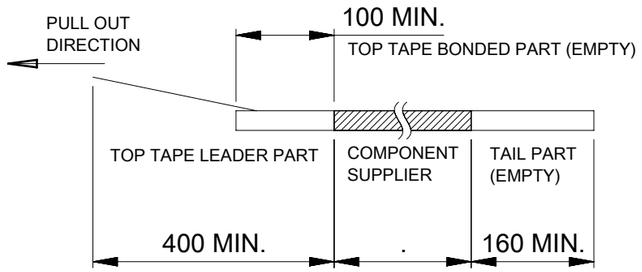

4. PEEL OFF FORCE OF THE TOP TAPE IS DEFINDED BY IEC 60286-3.
5. MATERIAL
   - CARRIER TAPE : POLYSTYRENE OR PET
   - TOP TAPE : PET, OTHER
   - REEL : POLYSTYRENE(PS) [RECYCLE MATERIAL CONTAINED]

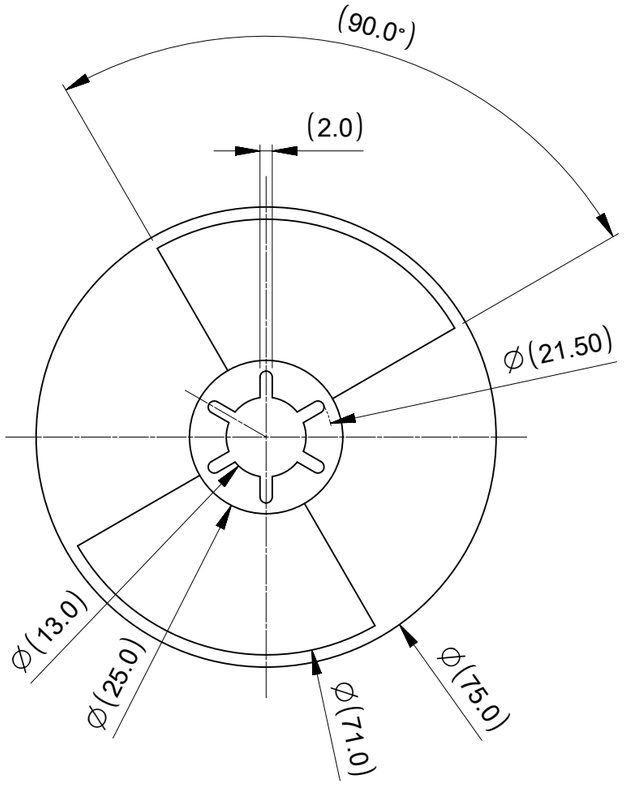

DETAIL "A"

FUNCTIONAL SYMBOLS	THIS DRAWING CONTAINS INFORMATION THAT IS PROPRIETARY TO MOLEX ELECTRONIC TECHNOLOGIES, LLC AND SHOULD NOT BE USED WITHOUT WRITTEN PERMISSION			
FA = 0	DIMENSION UNITS: mm	SCALE: 1:1	CURRENT REV DESC:	molex
FC = 0	GENERAL TOLERANCES (UNLESS SPECIFIED)			0.4 BB H=0.7 GCB7-PLUS REC ASSY PKG FOR BATTERY(15A)
FP = 0	ANGULAR TOL ± 3.0°		EC NO: 746459	
DIVISIONAL SYMBOLS	4 PLACES ± 0.1		DRWN: JHCHANG 2023/04/19	
	3 PLACES ± 0.1		CHK'D: JBJIN 2023/04/19	PRODUCT CUSTOMER DRAWING
	2 PLACES ± 0.1		APPR: JBJIN 2023/04/20	
	1 PLACE ± 0.1		INITIAL REVISION:	DOCUMENT NUMBER: 2166560101-SD; DOC TYPE: PSD; DOC PART: 000; REVISION: A
	0 PLACES ± 0.2		DRWN: JHCHANG 2023/04/17	
			APPR: JBJIN 2023/04/20	
	DRAFT WHERE APPLICABLE MUST REMAIN WITHIN DIMENSIONS	THIRD ANGLE PROJECTION	DRAWING: A3-SIZE; SERIES: 216656	MATERIAL NUMBER: SEE SHEET2; CUSTOMER: GENERAL; SHEET NUMBER: 1 OF 2

DOCUMENT STATUS	P1	RELEASE DATE	2023/04/20 00:36:37

FORMAT: tb-prod-A3
REVISION: J
DATE: 2020/01/14

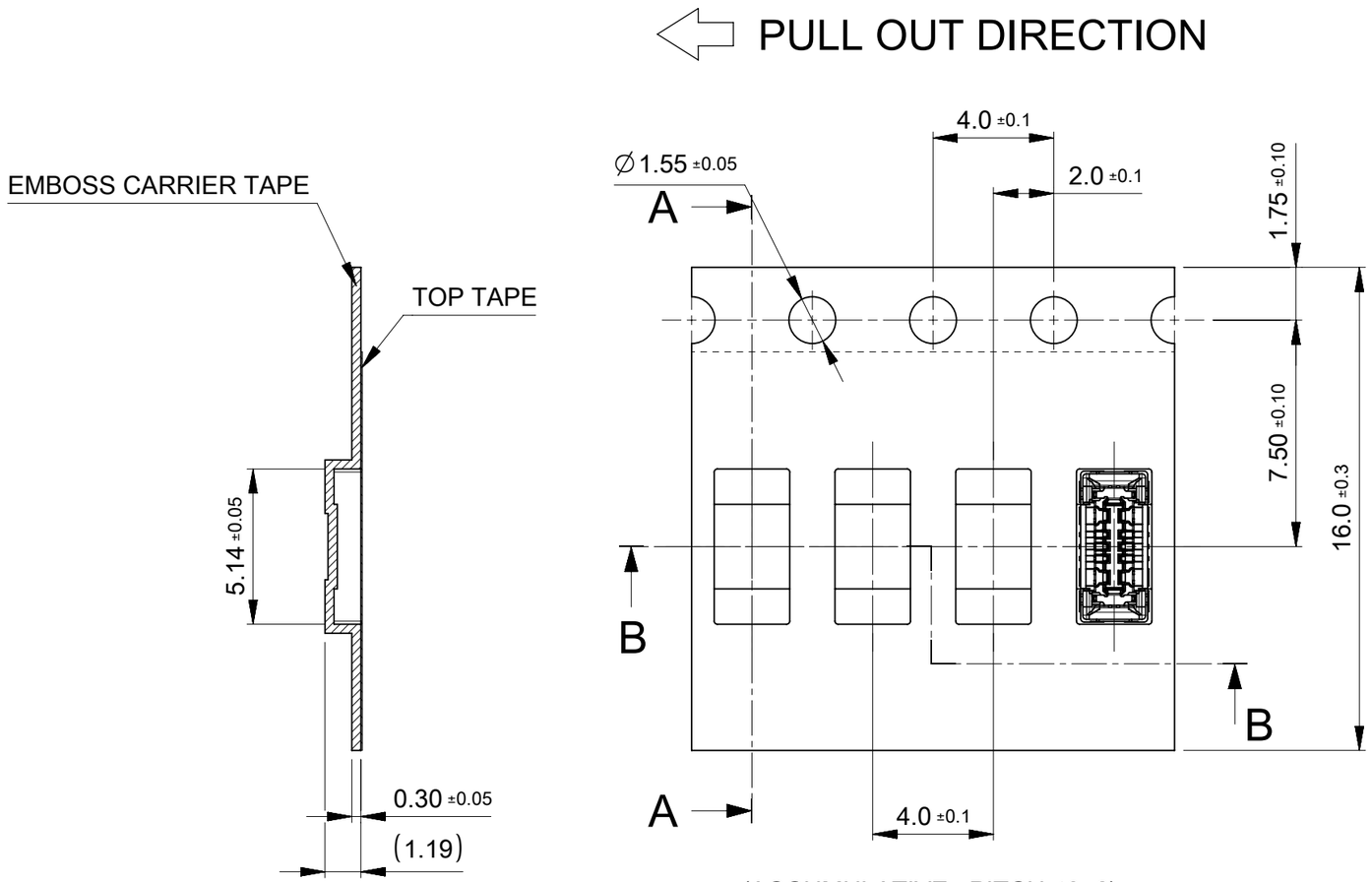

SECTION A-A

(ACCUMULATIVE : PITCH 40±2)

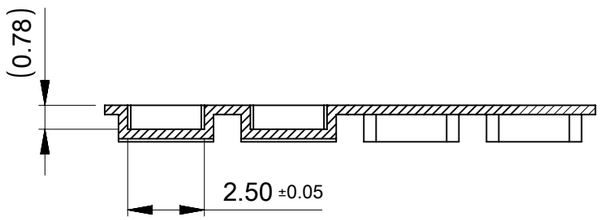

SECTION B-B

2166560109	O	---	6+4P
EMBOSSED TAPE PACKAGE	HIGH VOL. TOOL	LOW VOL. TOOL	Ckts
ORDER No.	SAMPLE PREPARATION O : TOOLED □ : WORK PROCESS --- : TOOLING TO BE CONFIRMED		

CONNECTOR SERIES No. : 2166560**0

THIS DRAWING CONTAINS INFORMATION THAT IS PROPRIETARY TO MOLEX ELECTRONIC TECHNOLOGIES, LLC AND SHOULD NOT BE USED WITHOUT WRITTEN PERMISSION

FUNCTIONAL SYMBOLS: FA = 0, FC = 0, FP = 0

DIVISIONAL SYMBOLS

DIMENSION UNITS	SCALE
mm	5:1

GENERAL TOLERANCES (UNLESS SPECIFIED)

ANGULAR TOL	±	3.0 °
4 PLACES	±	0.1
3 PLACES	±	0.1
2 PLACES	±	0.1
1 PLACE	±	0.1
0 PLACES	±	0.2

DRAFT WHERE APPLICABLE MUST REMAIN WITHIN DIMENSIONS

CURRENT REV DESC:

EC NO: 746459
DRWN: JHCHANG 2023/04/19
CHK'D: JBJIN 2023/04/19
APPR: JBJIN 2023/04/20

INITIAL REVISION:
DRWN: JHCHANG 2023/04/17
APPR: JBJIN 2023/04/20

THIRD ANGLE PROJECTION

DRAWING	SERIES
A3-SIZE	216656

molex

0.4 BB H=0.7 GCB7-PLUS REC ASSY PKG FOR BATTERY(15A)

PRODUCT CUSTOMER DRAWING

DOCUMENT NUMBER	DOC TYPE	DOC PART	REVISION
2166560101-SD	PSD	000	A

MATERIAL NUMBER	CUSTOMER	SHEET NUMBER
SEE SHEET2	GENERAL	2 OF 2

DOCUMENT STATUS	P1	RELEASE DATE	2023/04/20	00:36:37

FORMAT: master-tb-mod-A3
REVISION: J
DATE: 2020/01/14