TQP9111

1.8 – 2.7 GHz 2 Watt Power Amplifier

Applications

- Wireless Infrastructure
- Repeaters, Boosters, DAS
- High Power Amplifiers
- Pico and Macro Base Stations
- FDD or TDD

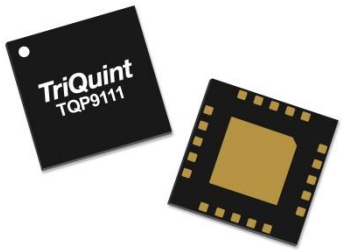

4x4 mm Leadless SMT Package

Product Features

- 1.8 – 2.7 GHz Frequency Range
- 29.8 dB Gain Typ.
- +46 dBm Output IP3 at +14 dBm/tone
- +32.5 dBm P1dB
- Integrated interstage matching
- Bias Adjustable
- Internal RF overdrive protection
- Internal DC overvoltage protection
- Shut-down capability

Functional Block Diagram

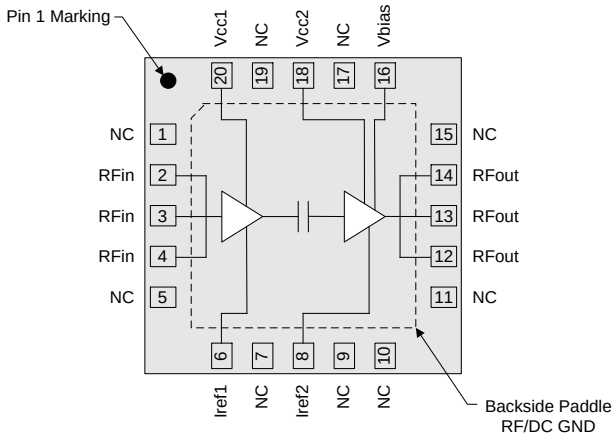

Top View

General Description

The TQP9111 is a high efficiency two-stage driver amplifier in a low-cost surface-mount package. The amplifier is able to achieve high performance with +46 dBm OIP3 and +32.5 dBm P1dB. This linear amplifier integrates two high performance amplifier stages onto a module to allow for a compact system design. The integrated inter-stage match minimizes performance variation that would otherwise be attributed to external matching component value and placement tolerances.

Both the input and output stage amplifiers are bias adjustable allowing the amplifier's power consumption to be reduced for occasions when high power performance is not required. Both stages can also be turned off when not being used for power savings or for TDD systems. The output match is externally tunable to allow the amplifier to be optimized for high power or high linearity applications. The TQP9111 is available in a RoHS-compliant 20-pin 4 x 4 mm surface mount package.

Pin Configuration

Pin No.	Label
1, 5, 7, 9, 10, 11, 15, 17, 19	NC
2, 3, 4	RF in
6	I_{REF1}
8	I_{REF2}
12, 13, 14	RF out
16	V_{BIAS}
18	V_{CC2}
20	V_{CC1}
Backside Pad	GND

Ordering Information

Part No.	Description
TQP9111	1.8–2.7 GHz Power Amplifier
TQP9111-PCB2140	1.8-2.2 GHz Evaluation board
TQP9111-PCB2600	2.3-2.7 GHz Evaluation board
Standard T/R size = 2500 pieces on a 13" reel	

© 2015 TriQuint Semiconductor, Inc
Disclaimer: Subject to change without notice
www.Qorvo.com / www.qorvo.com

Absolute Maximum Ratings

Parameter	Rating
Storage Temperature	−55 to 150 °C
Supply Voltage (V_{CC})	+6.5 V
RF Input Power, CW, 50 Ω, T=25 °C	+23 dBm

Operation of this device outside the parameter ranges given above may cause permanent damage.

Recommended Operating Conditions

Parameter	Min	Typ	Max	Units
Supply Voltage (V_{CC})		+5.0	+5.25	V
T_{CASE}	−40		+105	°C
Tj for >10^6 hours MTTF			+170	°C

Electrical specifications are measured at specified test conditions. Specifications are not guaranteed over all recommended operating conditions.

Electrical Specifications

Test conditions unless otherwise noted: V_{CC} = +5.0 V, I_{CC} = 521 mA, I_{REF1} = 4.5 mA, I_{REF2} = 19.5 mA, Temp.= +25 °C, 50 Ω

Parameter	Conditions	Min	Typ	Max	Units
Operational Frequency Range		1800		2700	MHz
Test Frequency			2140		MHz
Gain			29.8		dB
Input Return Loss			13		dB
Output Return Loss			20		dB
Noise Figure			6.2		dB
Output P1dB			+32.5		dBm
Output IP3	Pout = +11 dBm / tone, Δf = 1 MHz		+46		dBm
Current, I_{CC}			521		mA
Current, I_{REF1}			4.5		mA
Current, I_{REF2}			19.5		mA
Total Current			545		mA
Thermal Resistance, θ_{jc}	Junction to case			22.6	°C/W

© 2015 TriQuint Semiconductor, Inc

TQP9111−PCB2140 Evaluation Board (1.8 – 2.2 GHz)

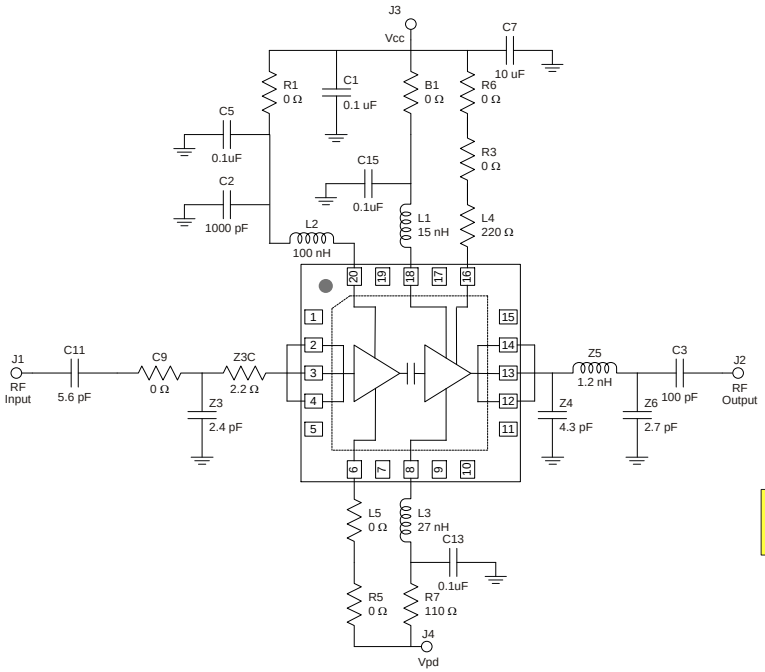

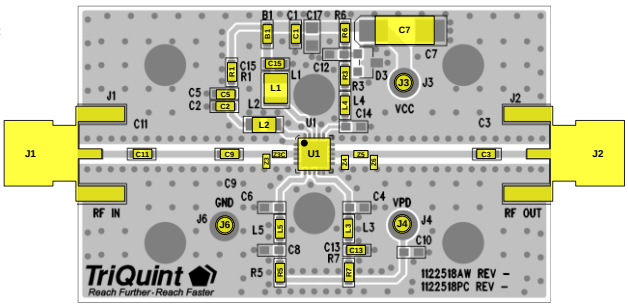

Bill of Material TQP9111-PCB2140

Ref Des	Value	Description	Manuf.	Part Number
U1		TQP9111	TriQuint	TQP9111
C1, C5, C13, C15	0.1 uF	CAP, 0603,10%, 50V, X7R	various	
C2	1000 pF	CAP, 0603, 5%, 50V, NPO	various	
C3	100 pF	CAP, 0603, 5%, 50V, NPO	various	
Z4	4.3 pF	CAP, 0402, +/-0.25PF. 50V. NPO/COG	various	
Z3C	2.2 Ω	RES, 0402, 5PCT. 1/16W. CHIP.	various	
Z3	2.4 pF	CAP, 0402, +/- 0.1PF. 50V. NPO	various	
Z5	1.2 nH	IND, 0402, chip, +/-0.3 nH	various	
C7	10 uF	CAP, 6032, 20%, 50V, Tantalum	various	
Z6	2.7 pF	CAP, 0402, +/- 0.1PF. 50V. NPO/COG	various	
C11	5.6 pF	CAP, 0603, +/-0.1PF. 200V. NPO/COG	various	
R7	110 Ω	RES, 0603, 1PCT., 1/10W	various	
L4	220 Ω	RES, 0603, 1PCT., 1/16W	various	
B1, L5, R1, R5, C9, R3, R6	0 Ω	RES, 0603, 5%, 1/16W, Chip	various	
L1	15 nH	IND, 1008, 5%, Ceramic	various	
L2	100 nH	IND, 0805, 5%, Ceramic	various	
L3	27 nH	IND, 0603, 5%, Ceramic	various	

Disclaimer: Subject to change without notice
© 2015 TriQuint Semiconductor, Inc
www.Qorvo.com / www.qorvo.com

Typical Performance TQP9111−PCB2140

Test conditions unless otherwise noted: V_{CC} = +5 V, I_{CQ} = 545 mA (typ.), V_{PD}= +5 V, Temp. = +25 °C

Parameter	Conditions	Typical Value			Units
Frequency		1800	1960	2140	MHz
Gain		30.4	30.0	29.8	dB
Input Return Loss		15	14	13	dB
Output Return Loss		9	15	20	dB
Output P1dB		+33.4	+32.5	+32.5	dBm
OIP3	Pout= +14 dBm/tone, Δf=1 MHz	+46	+46	+46	dBm
Noise Figure		6.0	6.1	6.2	dB

Performance Plots TQP9111-PCB2140

Test conditions unless otherwise noted: V_{CC} = +5 V, I_{CQ} = 545 mA (typ.), V_{PD} = +5 V, Temp. = +25 °C

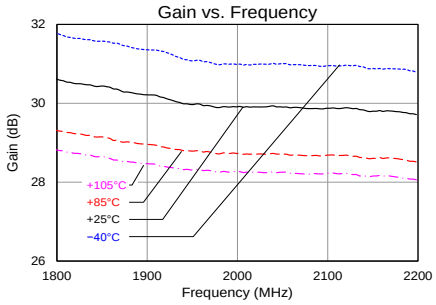

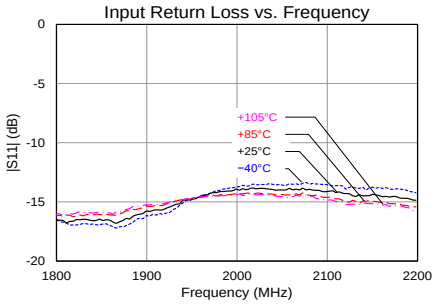

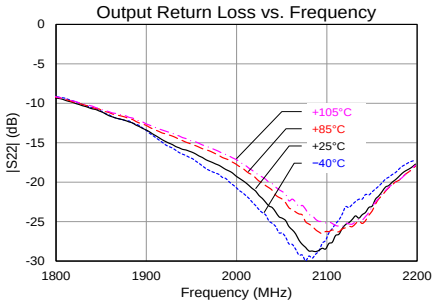

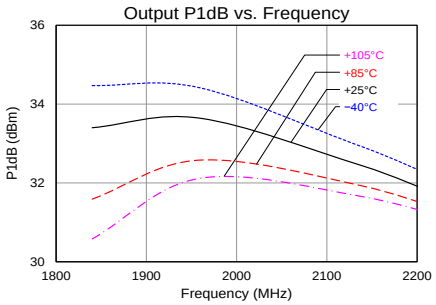

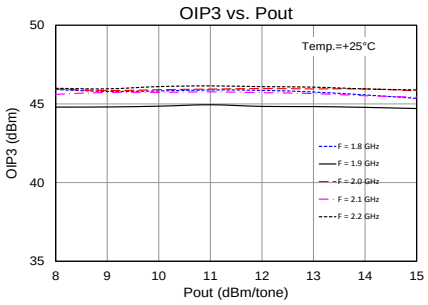

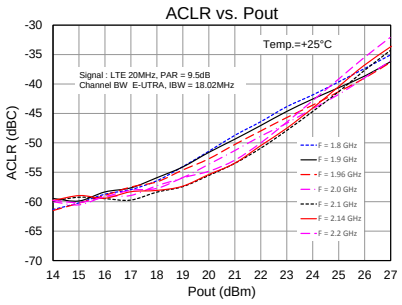

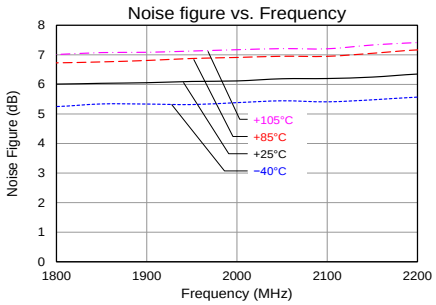

© 2015 TriQuint Semiconductor, Inc

TQP9111−PCB2600 Evaluation Board (2.3 – 2.7 GHz)

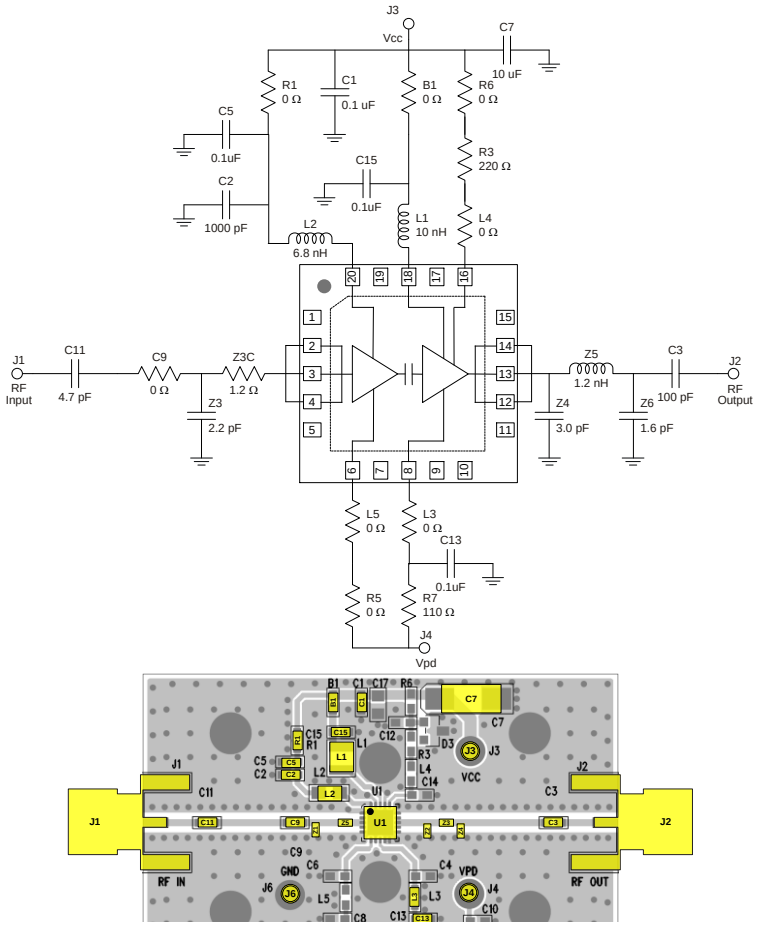

Bill of Material TQP9111-PCB2600

Ref Des	Value	Description	Manuf.	Part Number
U1		TQP9111	TriQuint	TQP9111
C1, C5, C13, C15	0.1 uF	CAP, 0603,10%, 50V, X7R	various	
C2	1000 pF	CAP, 0603, 5%, 50V, NPO	various	
C3	100 pF	CAP, 0603, 5%, 50V, NPO	various	
Z4	3.0 pF	CAP, 0402, +/-0.25PF. 50V. NPO/COG	various	
Z3C	1.2 Ω	RES, 0402, 5PCT. 1/16W. CHIP.	various	
Z3	2.2 pF	CAP, 0402, +/- 0.1PF. 50V. NPO	various	
Z5	1.2 nH	IND, 0402, chip, +/-0.3 nH	various	
C7	10 uF	CAP, 6032, 20%, 50V, Tantalum	various	
Z6	1.6 pF	CAP, 0402, +/- 0.1PF. 50V. NPO/COG	various	
C11	4.7 pF	CAP, 0603, +/-0.1PF. 200V. NPO/COG	various	
R7	110 Ω	RES, 0603, 1PCT., 1/10W	various	
R3	220 Ω	RES, 0603, 1PCT., 1/16W	various	
B1, L3, L4, L5, R1, R5, C9, R6	0 Ω	RES, 0603, 5%, 1/16W, Chip	various	
L1	10 nH	IND, 1008, 5%, Ceramic	various	
L2	6.8 nH	IND, 0805, 5%, Ceramic	various	

© 2015 TriQuint Semiconductor, Inc
Disclaimer: Subject to change without notice
www.Qorvo.com / www.qorvo.com

Typical Performance TQP9111−PCB2600

Test conditions unless otherwise noted: V_{CC} = +5 V, I_{CQ} = 545 mA (typ.), Vpd = +5 V, Temp. = +25 °C

Parameter	Conditions	Typical Value			Units
Frequency		2300	2500	2700	MHz
Gain		28.8	29.2	28.8	dB
Input Return Loss		8	13	16	dB
Output Return Loss		9	10	9	dB
Output P1dB		+33.0	+32.8	+32.0	dBm
OIP3	Pout= +14 dBm/tone, Δf=1 MHz	+45	+44.5	+44	dBm
Noise Figure		6.0	6.3	6.9	dB

Performance Plots TQP9111-PCB2600

Test conditions unless otherwise noted: V_{CC} = +5 V, I_{CQ} = 545 mA (typ.), Vpd = +5 V, Temp. = +25 °C

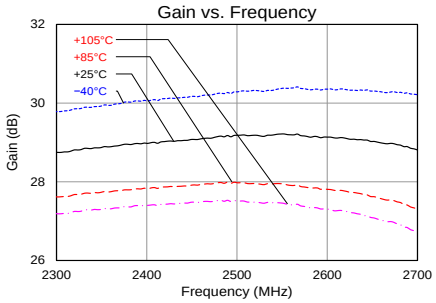

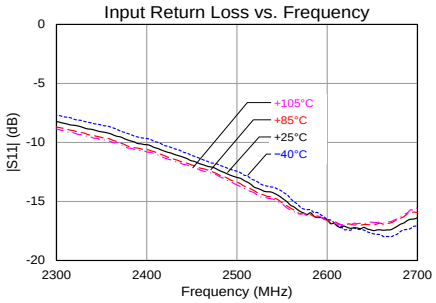

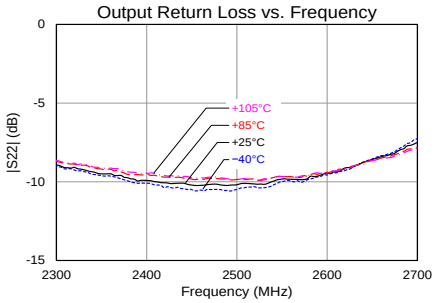

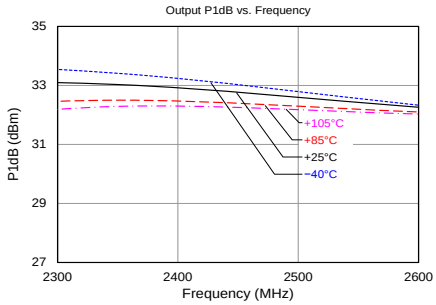

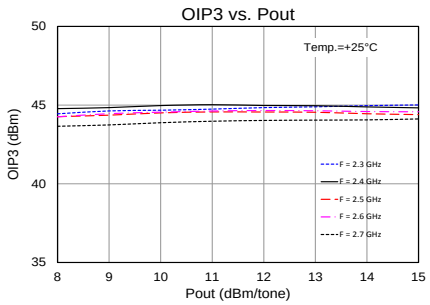

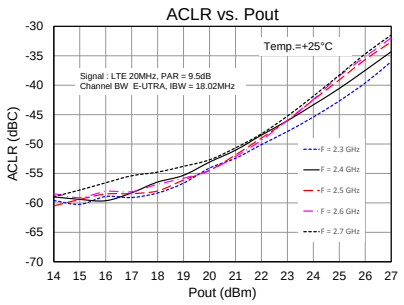

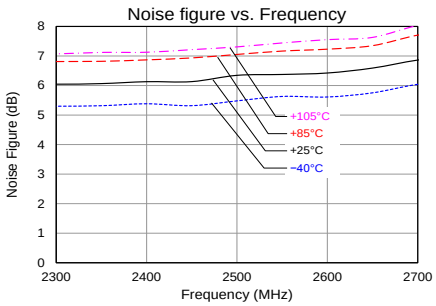

© 2015 TriQuint Semiconductor, Inc

Application Note − Reduced Bias Configurations TQP9111-PCB2140

The TQP9111 can be configured to be operated with lower bias current by varying the bias-adjust resistor – R7. The recommended circuit configurations shown previously in this datasheet have the device operating in Class A/B operation. Lowering the current has small effect on the S-parameters and P1dB performance of the device, but will start to lower the OIP3 and ACLR/ACPR performance of the device as shown below. An example of the measured data below represents the TQP9111 measured and configured for 1.8 to 2.2 GHz applications. It is expected that variation of the bias current for other frequency applications will produce similar performance results.

R7 (Ohms)	Icq (mA)	Pdiss (W)	P1dB (dBm)	OIP3 (dBm)
110	500	2.5	+32.3	+47.6
125	450	2.25	+32.3	+45.4
144	400	2.0	+32.3	+44.6
163	350	1.75	+32.3	+42.1
200	300	1.5	+32.3	+40.3

.

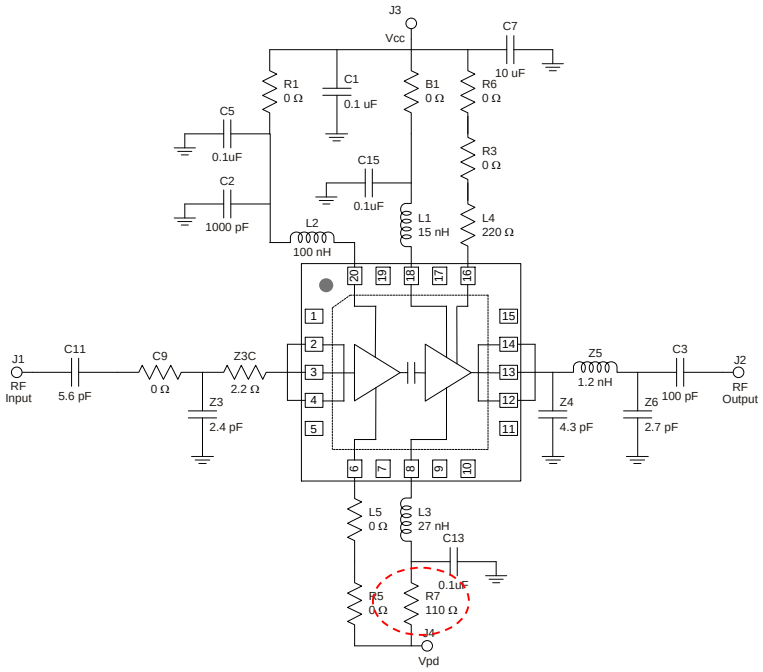

Disclaimer: Subject to change without notice
© 2015 TriQuint Semiconductor, Inc
www.Qorvo.com / www.qorvo.com

Performance Plots TQP9111-PCB2140

Test conditions unless otherwise noted: V_{CC} = +5 V, Vpd = +5 V, Temp. = +25 °C

Gain vs. Frequency

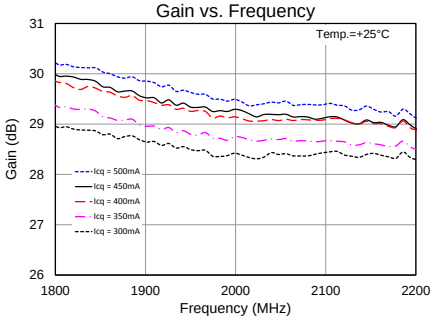

Input Return Loss vs. Frequency

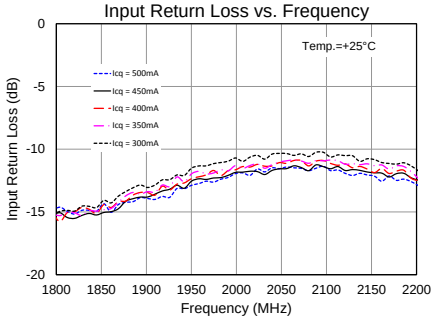

Output Return Loss vs. Frequency

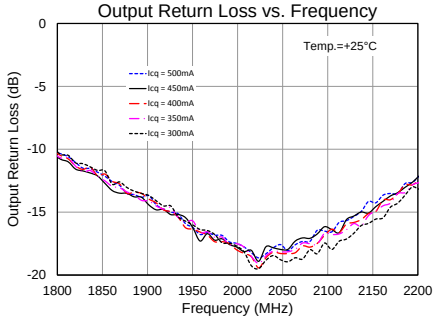

OIP3 vs. Pout/tone

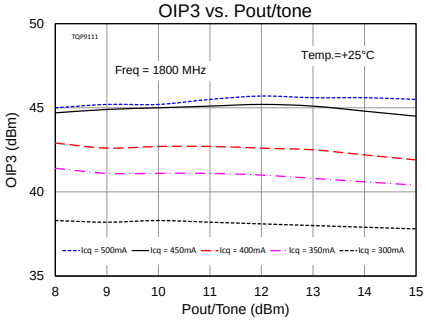

OIP3 vs. Pout/tone

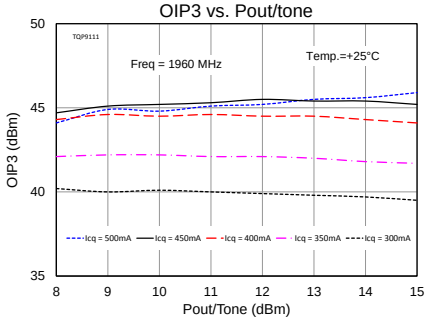

OIP3 vs. Pout/tone

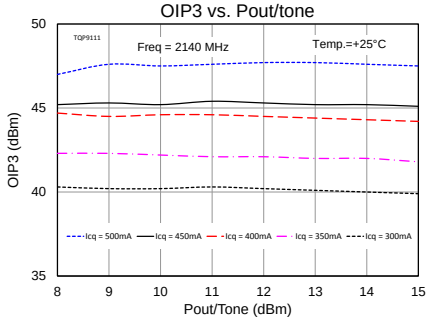

ACLR vs. Pout

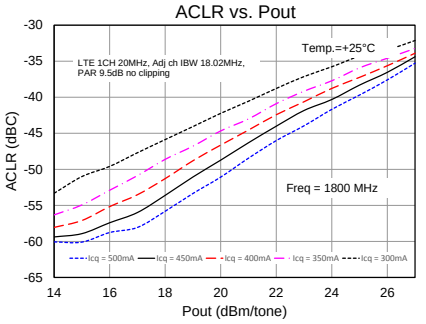

ACLR vs. Pout

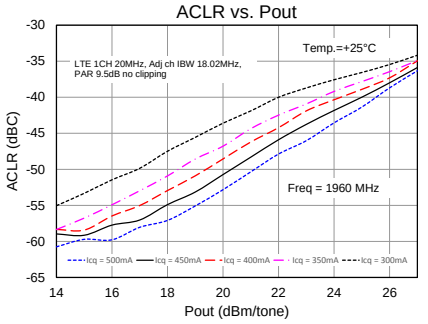

ACLR vs. Pout

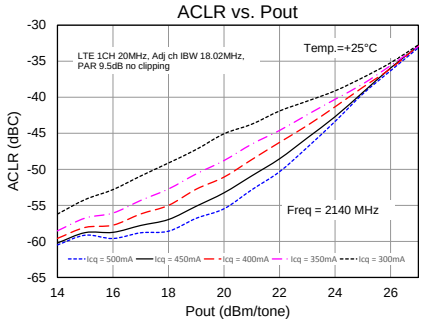

© 2015 TriQuint Semiconductor, Inc
Disclaimer: Subject to change without notice
www.Qorvo.com / www.qorvo.com

Switching Speed

Switching Speed Measurement based on TQS PCB2140 Application Board

Using Shutdown Circuit: V_{PD}=5V, V_{DD}=5V, C13=56pF

Parameter	
Turn-off Transition (50% CNTR – 10% RF)	40nS
Turn-on Transition (50% CNTR – 90% RF)	85nS

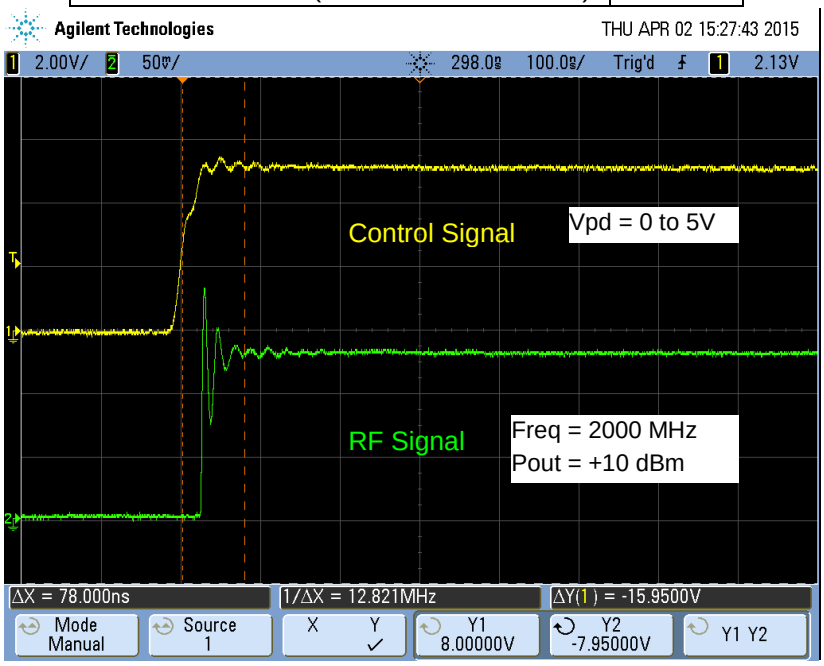

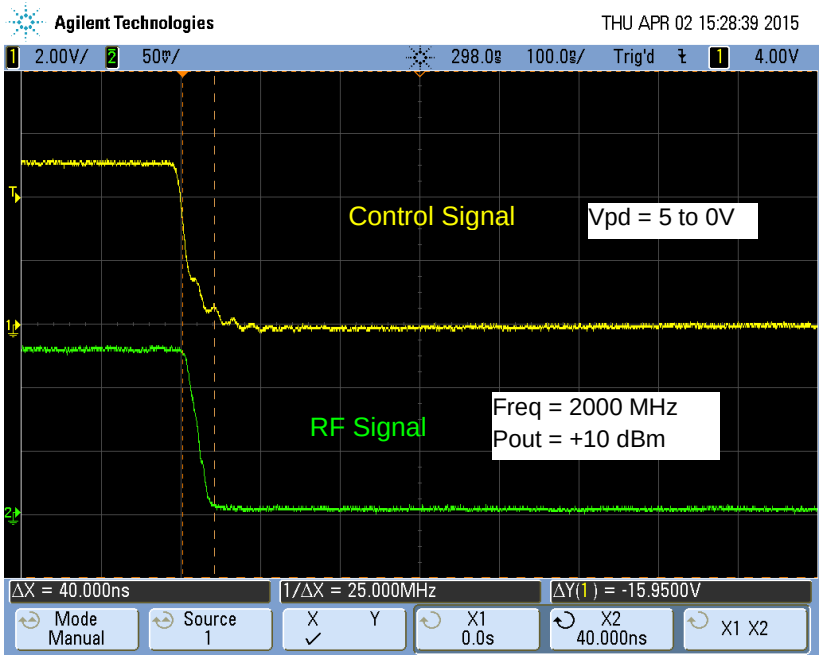

© 2015 TriQuint Semiconductor, Inc
Disclaimer: Subject to change without notice
www.Qorvo.com / www.qorvo.com

Pin Configuration and Description

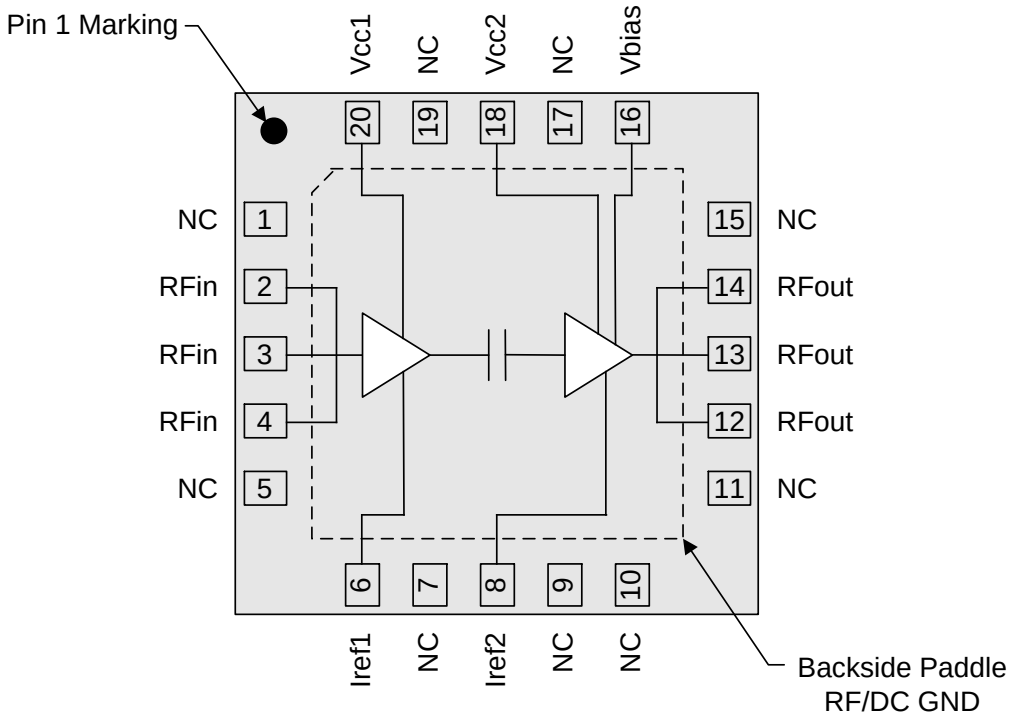

Top View

Pin No.	Label	Description
1, 5, 7, 9, 10, 11, 15, 17, 19	NC	No internal connection. Provide grounded land pads for PCB mounting integrity.
2, 3, 4	RF in	RF input pins. Require DC blocking and RF match for optimal performance.
6	I_{REF1}	Sets the bias current for Amp1. Also can be used to power down.
8	I_{REF2}	Sets the bias current for Amp2. Also can be used to power down.
12, 13, 14	RF out	RF output pins. Require DC blocking and RF match for optimal performance.
16	V_{BIAS}	Voltage supply for active bias for the second stage amp.
18	V_{CC2}	2nd Stage DC voltage supply connection.
20	V_{CC1}	1st Stage DC voltage supply connection.
Backside Pad	GND	RF/DC ground. Use recommended via pattern to minimize inductance and thermal resistance; see PCB Mounting Pattern for suggested footprint.

© 2015 TriQuint Semiconductor, Inc

Package Marking and Dimensions

Marking: Part number – TQP9111
Date - YYWW
Lot code – AaXXXX

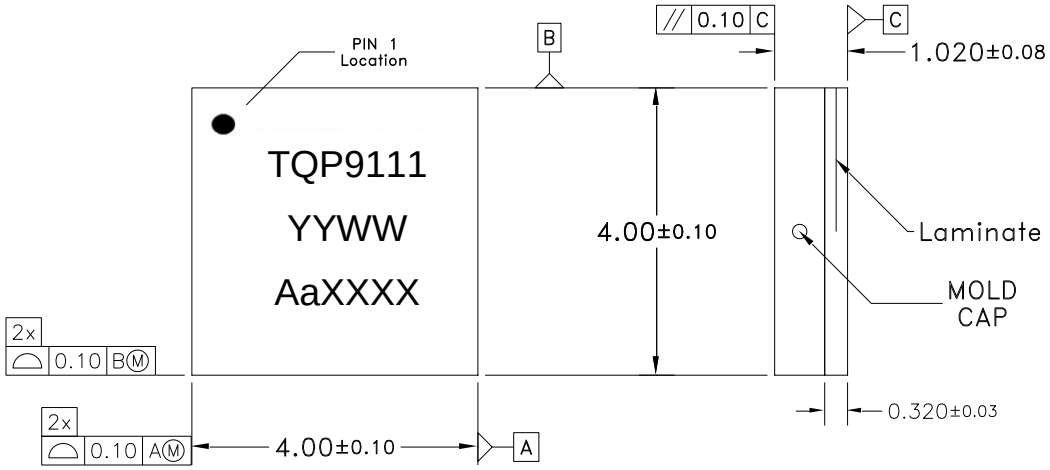

TOP VIEW

SIDE VIEW

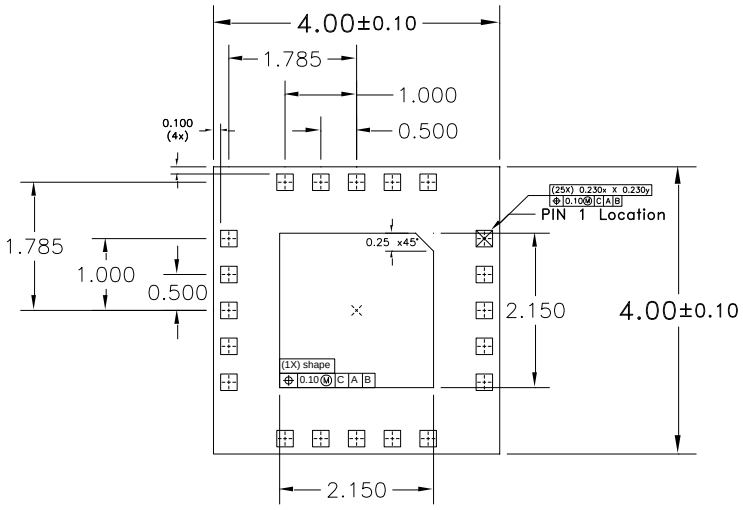

BOTTOM VIEW

Notes:
1. All dimensions are in millimeters. Angles are in degrees.
2. Dimension and tolerance formats conform to ASME Y14.4M-1994.
3. The terminal #1 identifier and terminal numbering conform to JESD 95-1 SPP-012.

© 2015 TriQuint Semiconductor, Inc

Product Compliance Information

ESD Sensitivity Ratings



Caution! ESD-Sensitive Device

ESD Class: Class 1C
Volt. Range: ≥ 1000 V to < 2000 V
Test: Human Body Model (HBM)
Standard: ESDA/JEDEC Standard JS-001-2012

ESD Class: Class C3
Volt. Range: > 1000 V
Test: Charged Device Model (CDM)
Standard: JEDEC Standard JESD22-C101

MSL Rating

MSL Rating: Level 3
Test: 260°C convection reflow
Standard: JEDEC Standard IPC/JEDEC J-STD-020

Solderability

Compatible with both lead-free (260 °C max. reflow temperature) and tin/lead (245 °C max. reflow temperature) soldering processes.

Package lead plating: Electrolytic plated Au over Ni

RoHs Compliance

This part is compliant with EU 2002/95/EC RoHS directive (Restrictions on the Use of Certain Hazardous Substances in Electrical and Electronic Equipment).

This product also has the following attributes:

- Halogen Free (Chlorine, Bromine)
- Antimony Free
- TBBP-A ($C_{15}H_{12}Br_4O_2$) Free
- PFOS Free
- SVHC Free

Contact Information

For the latest specifications, additional product information, worldwide sales and distribution locations:

Web: www.triquint.com **Tel: 877-800-8584**
Email: customer.support@qorvo.com

For information about the merger of RFMD and TriQuint as Qorvo:

Web: www.qorvo.com

For technical questions and application information:

Email: sjcapplications.engineering@qorvo.com

Important Notice

The information contained herein is believed to be reliable. TriQuint makes no warranties regarding the information contained herein. TriQuint assumes no responsibility or liability whatsoever for any of the information contained herein. TriQuint assumes no responsibility or liability whatsoever for the use of the information contained herein. The information contained herein is provided "AS IS, WHERE IS" and with all faults, and the entire risk associated with such information is entirely with the user. All information contained herein is subject to change without notice. Customers should obtain and verify the latest relevant information before placing orders for TriQuint products. The information contained herein or any use of such information does not grant, explicitly or implicitly, to any party any patent rights, licenses, or any other intellectual property rights, whether with regard to such information itself or anything described by such information.

TriQuint products are not warranted or authorized for use as critical components in medical, life-saving, or life-sustaining applications, or other applications where a failure would reasonably be expected to cause severe personal injury or death.

© 2015 TriQuint Semiconductor, Inc