# MX25L1633E

# DATASHEET

# Contents

**FEATURES** ..... **5**
General ..... 5
Performance ..... 5
Software Features ..... 5
Hardware Features ..... 6
**GENERAL DESCRIPTION** ..... **7**
Table 1. Additional Feature Comparison ..... 7
**PIN CONFIGURATIONS** ..... **8**
**PIN DESCRIPTION** ..... **8**
**BLOCK DIAGRAM** ..... **9**
**DATA PROTECTION** ..... **10**
Table 2. Protected Area Sizes ..... 11
Table 3. 512-bit Secured OTP Definition ..... 11
**Memory Organization** ..... **12**
Table 4. Memory Organization ..... 12
**DEVICE OPERATION** ..... **13**
Figure 1. Serial Modes Supported ..... 13
**COMMAND DESCRIPTION** ..... **14**
Table 5. Command Set ..... 14
(1) Write Enable (WREN) ..... 15
(2) Write Disable (WRDI) ..... 15
(3) Read Identification (RDID) ..... 15
(4) Read Status Register (RDSR) ..... 16
Status Register ..... 16
(5) Write Status Register (WRSR) ..... 17
Table 6. Protection Modes ..... 17
(6) Read Data Bytes (READ) ..... 18
(7) Read Data Bytes at Higher Speed (FAST_READ) ..... 18
(8) 2 x I/O Read Mode (2READ) ..... 18
(9) 4 x I/O Read Mode (4READ) ..... 19
(10) Sector Erase (SE) ..... 19
(11) Block Erase (BE) ..... 20
(12) Chip Erase (CE) ..... 20
(13) Page Program (PP) ..... 20
(14) 4 x I/O Page Program (4PP) ..... 21

(15) Deep Power-down (DP) ..... 21
(16) Release from Deep Power-down (RDP), Read Electronic Signature (RES) ..... 21
(17) Read Electronic Manufacturer ID & Device ID (REMS), (REMS2), (REMS4) ..... 22
Table 7. ID Definitions ..... 22
(18) Enter Secured OTP (ENSO) ..... 22
(19) Exit Secured OTP (EXSO) ..... 23
(20) Read Security Register (RDSCUR) ..... 23
Table 8. Security Register Definition ..... 23
(21) Write Security Register (WRSCUR) ..... 23

**POWER-ON STATE ..... 24**

**ELECTRICAL SPECIFICATIONS ..... 25**
Absolute Maximum Ratings ..... 25
Figure 2. Maximum Negative Overshoot Waveform ..... 25
Capacitance ..... 25
Figure 3. Maximum Positive Overshoot Waveform ..... 25
Figure 4. Input Test Waveforms and Measurement Level ..... 26
Figure 5. Output Loading ..... 26
Table 9. DC Characteristics ..... 27
Table 10. AC Characteristics ..... 28

**Timing Analysis ..... 29**
Figure 6. Serial Input Timing ..... 29
Figure 7. Output Timing ..... 29
Figure 8. WP# Setup Timing and Hold Timing during WRSR when SRWD=1 ..... 30
Figure 9. Write Enable (WREN) Sequence (Command 06) ..... 30
Figure 10. Write Disable (WRDI) Sequence (Command 04) ..... 30
Figure 11. Read Identification (RDID) Sequence (Command 9F) ..... 31
Figure 12. Read Status Register (RDSR) Sequence (Command 05) ..... 31
Figure 13. Write Status Register (WRSR) Sequence (Command 01) ..... 31
Figure 14. Read Data Bytes (READ) Sequence (Command 03) ..... 32
Figure 15. Read at Higher Speed (FAST_READ) Sequence (Command 0B) ..... 32
Figure 16. 2 x I/O Read Mode Sequence (Command BB) ..... 33
Figure 17. 4 x I/O Read Mode Sequence (Command EB) ..... 33
Figure 18. 4 x I/O Read enhance performance Mode Sequence (Command EB) ..... 34
Figure 19. Page Program (PP) Sequence (Command 02) ..... 35
Figure 20. 4 x I/O Page Program (4PP) Sequence (Command 38) ..... 35
Figure 21. Sector Erase (SE) Sequence (Command 20) ..... 36
Figure 22. Block Erase (BE) Sequence (Command D8) ..... 36
Figure 23. Chip Erase (CE) Sequence (Command 60 or C7) ..... 36
Figure 24. Deep Power-down (DP) Sequence (Command B9) ..... 37

Figure 25. RDP and Read Electronic Signature (RES) Sequence (Command AB) .....37
Figure 26. Release from Deep Power-down (RDP) Sequence (Command AB) .....38
Figure 27. Read Electronic Manufacturer & Device ID (REMS) Sequence (Command 90 or EF or DF).....38
Figure 28. Power-up Timing .....39
Table 11. Power-Up Timing .....39
Initial Delivery State.....39

**OPERATING CONDITIONS.....40**
Figure 29. AC Timing at Device Power-Up.....40
Figure 30. Power-Down Sequence .....41

**ERASE AND PROGRAMMING PERFORMANCE .....42**

**DATA RETENTION .....42**

**LATCH-UP CHARACTERISTICS .....42**

**ORDERING INFORMATION .....43**

**PART NAME DESCRIPTION.....44**

**PACKAGE INFORMATION.....45**

**REVISION HISTORY .....48**

# 16M-BIT [x 1/x 2/x 4] CMOS MXSMIO® (SERIAL MULTI I/O) FLASH MEMORY

## FEATURES

### General

- Serial Peripheral Interface compatible -- Mode 0 and Mode 3
- 16,777,216 x 1 bit structure or 8,388,608 x 2 bits (two I/O read mode) structure or 4,194,304 x 4 bits (four I/O read mode) structure
- 512 Equal Sectors with 4K byte each
  - Any Sector can be erased individually
- 32 Equal Blocks with 64K byte each
  - Any Block can be erased individually
- Single Power Supply Operation
  - 2.7 to 3.6 volt for read, erase, and program operations
- Latch-up protected to 100mA from -1V to Vcc +1V

### Performance

- High Performance
  - Fast read
    - 1 I/O: 104MHz with 8 dummy cycles
    - 2 I/O: 85MHz with 4 dummy cycles
    - 4 I/O: 85MHz with 6 dummy cycles
  - Fast access time: 104MHz serial clock
  - Serial clock of four I/O read mode : 85MHz, which is equivalent to 340MHz
  - Fast program time: 0.6ms(typ.) and 3ms(max.)/page (256-byte per page)
  - Byte program time: 9us (typical)
  - Fast erase time: 40ms (typ.)/sector (4K-byte per sector) ; 0.4s(typ.) /block (64K-byte per block); 5s(typ.) /chip
- Low Power Consumption
  - Low active read current: 25mA(max.) at 104MHz and 10mA(max.) at 33MHz
  - Low active programming current: 15mA (typ.)
  - Low active sector erase current: 9mA (typ.)
  - Low standby current: 15uA (typ.)
- Typical 100,000 erase/program cycles
- 20 years data retention

### Software Features

- Input Data Format
  - 1-byte Command code
- Advanced Security Features
  - Block lock protection

    The BP0-BP3 status bit defines the size of the area to be software protection against program and erase instructions
  - Additional 512-bit secured OTP for unique identifier
- Auto Erase and Auto Program Algorithm
  - Automatically erases and verifies data at selected sector
  - Automatically programs and verifies data at selected page by an internal algorithm that automatically times the program pulse widths (Any page to be programed should have page in the erased state first)
- Status Register Feature
- Electronic Identification
  - JEDEC 1-byte manufacturer ID and 2-byte device ID
  - RES command for 1-byte Device ID
  - Both REMS,REMS2 and REMS4 commands for 1-byte manufacturer ID and 1-byte device ID

**Hardware Features**

- SCLK Input
  - Serial clock input
- SI/SIO0
  - Serial Data Input or Serial Data Input/Output for 2 x I/O read mode and 4 x I/O read mode
- SO/SIO1
  - Serial Data Output or Serial Data Input/Output for 2 x I/O read mode and 4 x I/O read mode
- WP#/SIO2
  - Hardware write protection or serial data Input/Output for 4 x I/O read mode
- NC/SIO3
  - NC pin or serial data Input/Output for 4 x I/O read mode
- PACKAGE
  - 8-land WSON (6x5mm)
  - 8-land USON (4x4mm)
  - 8-pin SOP (200mil)
  - **All devices are RoHS Compliant & Halogen-free.**

## GENERAL DESCRIPTION

The MX25L1633E are 16,777,216 bit serial Flash memory, which is configured as 2,097,152 x 8 internally. When it is in two or four I/O read mode, the structure becomes 8,388,608 bits x 2 or 4,194,304 bits x 4. The MX25L1633E feature a serial peripheral interface and software protocol allowing operation on a simple 3-wire bus. The three bus signals are a clock input (SCLK), a serial data input (SI), and a serial data output (SO). Serial access to the device is enabled by CS# input.

When it is in two I/O read mode, the SI pin and SO pin become SIO0 pin and SIO1 pin for address/dummy bits input and data output. When it is in four I/O read mode, the SI pin, SO pin, WP# pin and NC pin become SIO0 pin, SIO1 pin, SIO2 pin and SIO3 pin for address/dummy bits input and data output.

The MX25L1633E provides sequential read operation on whole chip.

After program/erase command is issued, auto program/erase algorithms which program/erase and verify the specified page or sector/block locations will be executed. Program command is executed on byte basis, or page (256 bytes) basis, and erase command is executes on sector (4K-byte), or block (64K-byte), or whole chip basis.

To provide user with ease of interface, a status register is included to indicate the status of the chip. The status read command can be issued to detect completion status of a program or erase operation via WIP bit.

Advanced security features enhance the protection and security functions, please see security features section for more details.

When the device is not in operation and CS# is high, it is put in standby mode.

The MX25L1633E utilizes Macronix proprietary memory cell, which reliably stores memory contents even after 100,000 program and erase cycles.

**Table 1. Additional Feature Comparison**

| Additional Features / Part Name | Protection and Security | | Read Performance | | Identifier | | | | |
|---|---|---|---|---|---|---|---|---|---|
| | Flexible Block Protection (BP0-BP3) | 512-bit secured OTP | 2 I/O Read | 4 I/O Read | RES (command: AB hex) | REMS (command: 90 hex) | REMS2 (command: EF hex) | REMS4 (command: DF hex) | RDID (command: 9F hex) |
| MX25L1633E | V | V | V | V | 24 (hex) | C2 24 (hex) (if ADD=0) | C2 24 (hex) (if ADD=0) | C2 24 (hex) (if ADD=0) | C2 24 15 (hex) |
| MX25L1635D | V | V | V | V | 24 (hex) | C2 24 (hex) (if ADD=0) | C2 24 (hex) (if ADD=0) | C2 24 (hex) (if ADD=0) | C2 24 15 (hex) |

## PIN CONFIGURATIONS

### 8-PIN SOP (200mil)

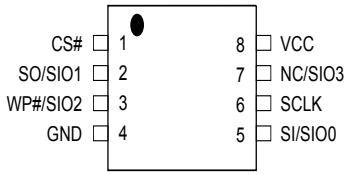


### 8-LAND WSON (6x5mm), USON (4x4mm)

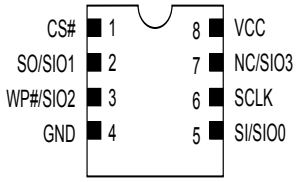


## PIN DESCRIPTION

| SYMBOL | DESCRIPTION |
|---|---|
| CS# | Chip Select |
| SI/SIO0 | Serial Data Input (for 1 x I/O)/ Serial Data Input & Output (for 2xI/O or 4xI/O read mode) |
| SO/SIO1 | Serial Data Output (for 1 x I/O)/ Serial Data Input & Output (for 2xI/O or 4xI/O read mode) |
| SCLK | Clock Input |
| WP#/SIO2 | Write protection: connect to GND or Serial Data Input & Output (for 4xI/O read mode) |
| NC/SIO3 | NC pin (Not connect) or Serial Data Input & Output (for 4xI/O read mode) |
| VCC | + 3.3V Power Supply |
| GND | Ground |

## BLOCK DIAGRAM

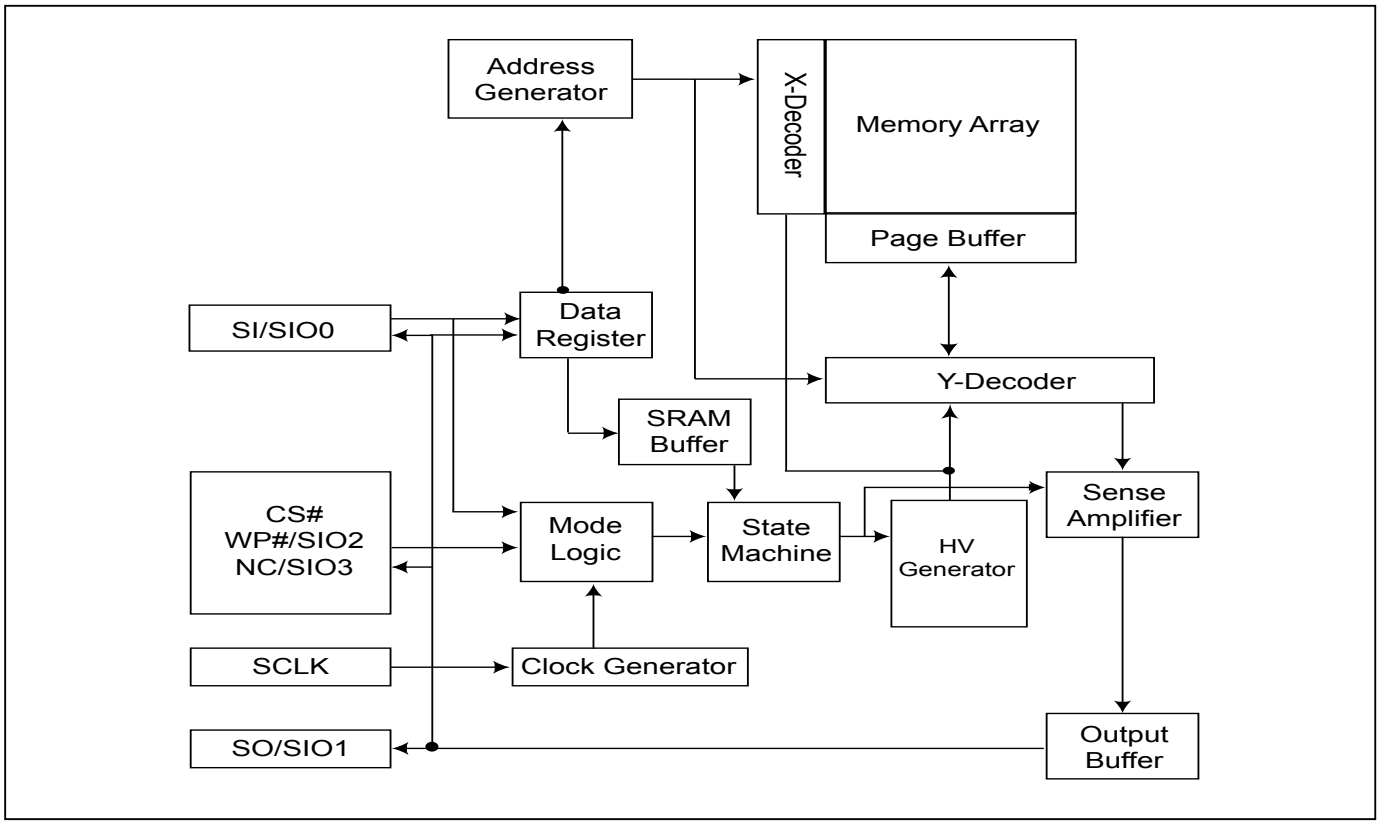

## DATA PROTECTION

During power transition, there may be some false system level signals which result in inadvertent erasure or programming. The device is designed to protect itself from these accidental write cycles.

The state machine will be reset as standby mode automatically during power up. In addition, the control register architecture of the device constrains that the memory contents can only be changed after specific command sequences have completed successfully.

In the following, there are several features to protect the system from the accidental write cycles during VCC power-up and power-down or from system noise.

- Valid command length checking: The command length will be checked whether it is at byte base and completed on byte boundary.

- Write Enable (WREN) command: WREN command is required to set the Write Enable Latch bit (WEL) before other command to change data. The WEL bit will return to reset stage under following situation:
  - Power-up
  - Write Disable (WRDI) command completion
  - Write Status Register (WRSR) command completion
  - Page Program (PP, 4PP) command completion
  - Sector Erase (SE) command completion
  - Block Erase (BE) command completion
  - Chip Erase (CE) command completion

- Deep Power Down Mode: By entering deep power down mode, the flash device also is under protected from writing all commands except Release from deep power down mode command (RDP) and Read Electronic Signature command (RES).

- Advanced Security Features: there are some protection and securuity features which protect content from inadvertent write and hostile access.

  **I. Block lock protection**

  - The Software Protected Mode (SPM) use (BP3, BP2, BP1, BP0) bits to allow part of memory to be protected as read only. The proected area definition is shown as table of "Protected Area Sizes", the protected areas are more flexible which may protect various area by setting value of BP0-BP3 bits.
  Please refer to table of "protected area sizes".

  - The Hardware Proteced Mode (HPM) use WP#/SIO2 to protect the (BP3, BP2, BP1, BP0) bits and SRWD bit.
  If the system goes into four I/O read mode, the feature of HPM will be disabled.

**Table 2. Protected Area Sizes**

| Status bit | | | | Protect Level |
|---|---|---|---|---|
| BP3 | BP2 | BP1 | BP0 | 16Mb |
| 0 | 0 | 0 | 0 | 0 (none) |
| 0 | 0 | 0 | 1 | 1 (1block, protected block 31th) |
| 0 | 0 | 1 | 0 | 2 (2blocks, protected block 30th-31th) |
| 0 | 0 | 1 | 1 | 3 (4blocks, protected block 28th-31th) |
| 0 | 1 | 0 | 0 | 4 (8blocks, protected block 24th-31th) |
| 0 | 1 | 0 | 1 | 5 (16blocks, protected block 16th-31th) |
| 0 | 1 | 1 | 0 | 6 (32blocks, protected all) |
| 0 | 1 | 1 | 1 | 7 (32blocks, protected all) |
| 1 | 0 | 0 | 0 | 8 (32blocks, protected all) |
| 1 | 0 | 0 | 1 | 9 (32blocks, protected all) |
| 1 | 0 | 1 | 0 | 10 (16blocks, protected block 0th-15th) |
| 1 | 0 | 1 | 1 | 11 (24blocks, protected block 0th-23th) |
| 1 | 1 | 0 | 0 | 12 (28blocks, protected block 0th-27th) |
| 1 | 1 | 0 | 1 | 13 (30blocks, protected block 0th-29th) |
| 1 | 1 | 1 | 0 | 14 (31blocks, protected block 0th-30th) |
| 1 | 1 | 1 | 1 | 15 (32blocks, protected all) |

**II. Additional 512-bit secured OTP** for unique identifier: to provide 512-bit one-time program area for setting device unique serial number - Which may be set by factory or system customer. Please refer to *table 3. 512-bit secured OTP definition*.

- Security register bit 0 indicates whether the chip is locked by factory or not.

- To program the 512-bit secured OTP by entering 512-bit secured OTP mode (with ENSO command), and going through normal program procedure, and then exiting 512-bit secured OTP mode by writing EXSO command.

- Customer may lock-down the customer lockable secured OTP by writing WRSCUR(write security register) command to set customer lock-down bit1 as "1". Please refer to table of "security register definition" for security register bit definition and table of "512-bit secured OTP definition" for address range definition.

- ***Note:*** Once lock-down whatever by factory or customer, it cannot be changed any more. While in 512-bit secured OTP mode, array access is not allowed.

**Table 3. 512-bit Secured OTP Definition**

| Address range | Size | Standard Factory Lock | Customer Lock |
|---|---|---|---|
| xxxx00~xxxx0F | 128-bit | ESN (electrical serial number) | Determined by customer |
| xxxx10~xxxx3F | 384-bit | N/A | |

## Memory Organization

### Table 4. Memory Organization

| Block | Sector | Address Range | |
|---|---|---|---|
| 31 | 511 | 1FF000h | 1FFFFFh |
| | : | : | : |
| | 496 | 1F0000h | 1F0FFFh |
| 30 | 495 | 1EF000h | 1EFFFFh |
| | : | : | : |
| | 480 | 1E0000h | 1E0FFFh |
| 29 | 479 | 1DF000h | 1DFFFFh |
| | : | : | : |
| | 464 | 1D0000h | 1D0FFFh |
| 28 | 463 | 1CF000h | 1CFFFFh |
| | : | : | : |
| | 448 | 1C0000h | 1C0FFFh |
| 27 | 447 | 1BF000h | 1BFFFFh |
| | : | : | : |
| | 432 | 1B0000h | 1B0FFFh |
| 26 | 431 | 1AF000h | 1AFFFFh |
| | : | : | : |
| | 416 | 1A0000h | 1A0FFFh |
| 25 | 415 | 19F000h | 19FFFFh |
| | : | : | : |
| | 400 | 190000h | 190FFFh |
| 24 | 399 | 18F000h | 18FFFFh |
| | : | : | : |
| | 384 | 180000h | 180FFFh |
| 23 | 383 | 17F000h | 17FFFFh |
| | : | : | : |
| | 368 | 170000h | 170FFFh |
| 22 | 367 | 16F000h | 16FFFFh |
| | : | : | : |
| | 352 | 160000h | 160FFFh |
| 21 | 351 | 15F000h | 15FFFFh |
| | : | : | : |
| | 336 | 150000h | 150FFFh |
| 20 | 335 | 14F000h | 14FFFFh |
| | : | : | : |
| | 320 | 140000h | 140FFFh |
| 19 | 319 | 13F000h | 13FFFFh |
| | : | : | : |
| | 304 | 130000h | 130FFFh |
| 18 | 303 | 12F000h | 12FFFFh |
| | : | : | : |
| | 288 | 120000h | 120FFFh |
| 17 | 287 | 11F000h | 11FFFFh |
| | : | : | : |
| | 272 | 110000h | 110FFFh |
| 16 | 271 | 10F000h | 10FFFFh |
| | : | : | : |
| | 256 | 100000h | 100FFFh |
| 15 | 255 | 0FF000h | 0FFFFFh |
| | : | : | : |
| | 240 | 0F0000h | 0F0FFFh |
| 14 | 239 | 0EF000h | 0EFFFFh |
| | : | : | : |
| | 224 | 0E0000h | 0E0FFFh |
| 13 | 223 | 0DF000h | 0DFFFFh |
| | : | : | : |
| | 208 | 0D0000h | 0D0FFFh |
| 12 | 207 | 0CF000h | 0CFFFFh |
| | : | : | : |
| | 192 | 0C0000h | 0C0FFFh |
| 11 | 191 | 0BF000h | 0BFFFFh |
| | : | : | : |
| | 176 | 0B0000h | 0B0FFFh |
| 10 | 175 | 0AF000h | 0AFFFFh |
| | : | : | : |
| | 160 | 0A0000h | 0A0FFFh |
| 9 | 159 | 09F000h | 09FFFFh |
| | : | : | : |
| | 144 | 090000h | 090FFFh |
| 8 | 143 | 08F000h | 08FFFFh |
| | : | : | : |
| | 128 | 080000h | 080FFFh |
| 7 | 127 | 07F000h | 07FFFFh |
| | : | : | : |
| | 112 | 070000h | 070FFFh |
| 6 | 111 | 06F000h | 06FFFFh |
| | : | : | : |
| | 96 | 060000h | 060FFFh |
| 5 | 95 | 05F000h | 05FFFFh |
| | : | : | : |
| | 80 | 050000h | 050FFFh |
| 4 | 79 | 04F000h | 04FFFFh |
| | : | : | : |
| | 64 | 040000h | 040FFFh |
| 3 | 63 | 03F000h | 03FFFFh |
| | : | : | : |
| | 48 | 030000h | 030FFFh |
| 2 | 47 | 02F000h | 02FFFFh |
| | : | : | : |
| | 32 | 020000h | 020FFFh |
| 1 | 31 | 01F000h | 01FFFFh |
| | : | : | : |
| | 16 | 010000h | 010FFFh |
| 0 | 15 | 00F000h | 00FFFFh |
| | : | : | : |
| | 2 | 002000h | 002FFFh |
| | 1 | 001000h | 001FFFh |
| | 0 | 000000h | 000FFFh |

## DEVICE OPERATION

1. Before a command is issued, status register should be checked to ensure device is ready for the intended operation.

2. When incorrect command is inputted to this LSI, this LSI becomes standby mode and keeps the standby mode until next CS# falling edge. In standby mode, all SO pins of this LSI should be High-Z.

3. When correct command is inputted to this LSI, this LSI becomes active mode and keeps the active mode until next CS# rising edge.

4. Input data is latched on the rising edge of Serial Clock(SCLK) and data shifts out on the falling edge of SCLK. The difference of Serial mode 0 and mode 3 is shown as *Figure 1*.

5. For the following instructions: RDID, RDSR, RDSCUR, READ, FAST_READ, 2READ, 4READ, RES, REMS, REMS2, and REMS4 the shifted-in instruction sequence is followed by a data-out sequence. After any bit of data being shifted out, the CS# can be high. For the following instructions: WREN, WRDI, WRSR, SE, BE, CE, PP, 4PP, RDP, DP, ENSO, EXSO,and WRSCUR, the CS# must go high exactly at the byte boundary; otherwise, the instruction will be rejected and not executed.

6. During the progress of Write Status Register, Program, Erase operation, to access the memory array is neglected and not affect the current operation of Write Status Register, Program, Erase.

**Figure 1. Serial Modes Supported**

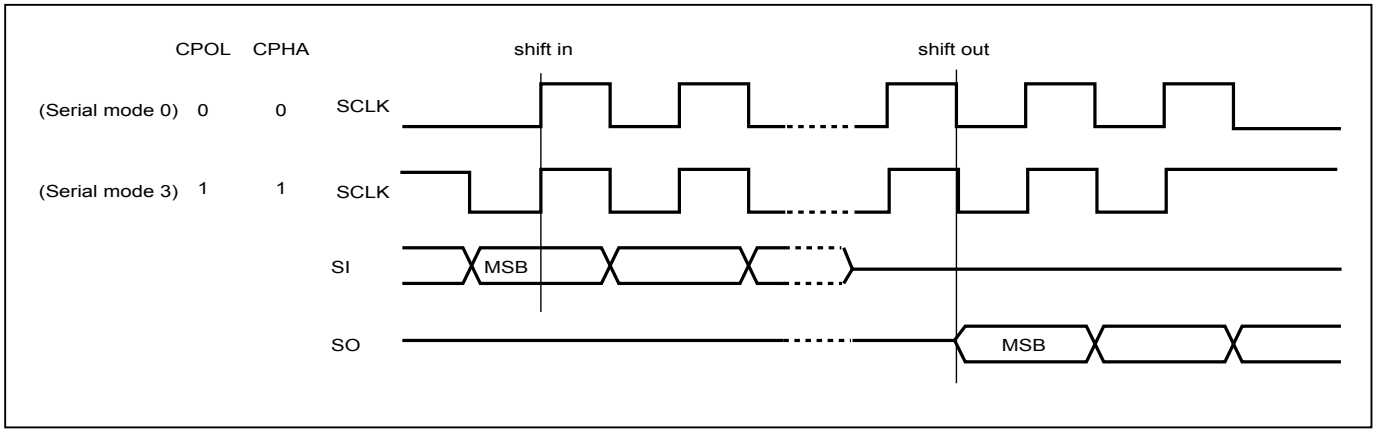


***Note:***
CPOL indicates clock polarity of Serial master,
-CPOL=1 for SCLK high while idle,
-CPOL=0 for SCLK low while not transmitting.
CPHA indicates clock phase.
The combination of CPOL bit and CPHA bit decides which Serial mode is supported.

## COMMAND DESCRIPTION

**Table 5. Command Set**

| Command (byte) | WREN (write enable) | WRDI (write disable) | RDID (read identific-ation) | RDSR (read status register) | WRSR (write status register) | READ (read data) | FAST READ (fast read data) | 2READ (2 x I/O read command) *Note1* | 4READ (4 x I/O read command) *Note2* |
|---|---|---|---|---|---|---|---|---|---|
| 1st byte | 06 (hex) | 04 (hex) | 9F (hex) | 05 (hex) | 01 (hex) | 03 (hex) | 0B (hex) | BB (hex) | EB (hex) |
| 2nd byte | | | | | Values | AD1 (A23-A16) | AD1 | ADD(2) | ADD(4) & Dummy(4) |
| 3rd byte | | | | | | AD2 (A15-A8) | AD2 | ADD(2) & Dummy(2) | Dummy(4) |
| 4th byte | | | | | | AD3 (A7-A0) | AD3 | | |
| 5th byte | | | | | | | Dummy | | |
| Action | sets the (WEL) write enable latch bit | resets the (WEL) write enable latch bit | outputs JEDEC ID: 1-byte Manufact-urer ID & 2-byte Device ID | to read out the values of the status register | to write new values of the status register | n bytes read out until CS# goes high | n bytes read out until CS# goes high | n bytes read out by 2 x I/O until CS# goes high | n bytes read out by 4 x I/O until CS# goes high |

| Command (byte) | 4PP (quad page program) | SE (sector erase) | BE (block erase) | CE (chip erase) | PP (page program) | DP (Deep power down) | RDP (Release from deep power down) | RES (read electronic ID) |
|---|---|---|---|---|---|---|---|---|
| 1st byte | 38 (hex) | 20 (hex) | D8 (hex) | 60 or C7 (hex) | 02 (hex) | B9 (hex) | AB (hex) | AB (hex) |
| 2nd byte | AD1 | AD1 | AD1 | | AD1 | | | x |
| 3rd byte | | AD2 | AD2 | | AD2 | | | x |
| 4th byte | | AD3 | AD3 | | AD3 | | | x |
| Action | quad input to program the selected page | to erase the selected sector | to erase the selected block | to erase whole chip | to program the selected page | enters deep power down mode | release from deep power down mode | to read out 1-byte Device ID |

| Command (byte) | Release Read Enhanced | REMS (read electronic manufacturer & device ID) | REMS2 (read ID for 2x I/O mode) | REMS4 (read ID for 4x I/O mode) | ENSO (enter secured OTP) | EXSO (exit secured OTP) | RDSCUR (read security register) | WRSCUR (write security register) |
|---|---|---|---|---|---|---|---|---|
| 1st byte | FFh (hex) | 90 (hex) | EF (hex) | DF (hex) | B1 (hex) | C1 (hex) | 2B (hex) | 2F (hex) |
| 2nd byte | x | x | X | x | | | | |
| 3rd byte | x | x | X | x | | | | |
| 4th byte | x | ADD *(Note 3)* | ADD *(Note 3)* | ADD *(Note 3)* | | | | |
| Action | All these commands FFh, 00h, AAh or 55h will escape the performance enhance mode | output the Manufacturer ID & Device ID | output the Manufacturer ID & Device ID | output the Manufacturer ID & Device ID | to enter the 512-bit secured OTP mode | to exit the 512-bit secured OTP mode | to read value of security register | to set the lock-down bit as "1" (once lock-down, cannot be update) |

***Note 1:*** The count base is 4-bit for ADD(2) and Dummy(2) because of 2 x I/O.
***Note 2:*** The count base is 4-bit for ADD(4) and Dummy(4) because of 4 x I/O.
***Note 3:*** ADD=00H will output the manufacturer ID first and ADD=01H will output device ID first.
***Note 4:*** It is not recommended to adopt any other code not in the command definition table, which will potentially enter the hidden mode.

**(1) Write Enable (WREN)**

The Write Enable (WREN) instruction is for setting Write Enable Latch (WEL) bit. For those instructions like PP, 4PP, SE, BE, CE, and WRSR, which are intended to change the device content, should be set every time after the WREN instruction setting the WEL bit.

The sequence of issuing WREN instruction is: CS# goes low→ sending WREN instruction code→CS# goes high. (see *Figure 9*)

**(2) Write Disable (WRDI)**

The Write Disable (WRDI) instruction is for resetting Write Enable Latch (WEL) bit.

The sequence of issuing WRDI instruction is: CS# goes low→sending WRDI instruction code→CS# goes high. (see *Figure 10*)

The WEL bit is reset by following situations:

- Power-up
- Write Disable (WRDI) instruction completion
- Write Status Register (WRSR) instruction completion
- Page Program (PP) instruction completion
- Quad Page Program (4PP) instruction completion
- Sector Erase (SE) instruction completion
- Block Erase (BE) instruction completion
- Chip Erase (CE) instruction completion

**(3) Read Identification (RDID)**

The RDID instruction is for reading the manufacturer ID of 1-byte and followed by Device ID of 2-byte. The Macronix Manufacturer ID is C2(hex), the memory type ID is 24(hex) as the first-byte device ID, and the individual device ID of second-byte ID are listed as table of "ID Definitions". (see *table 7*)

The sequence of issuing RDID instruction is: CS# goes low→sending RDID instruction code→24-bits ID data out on SO→ to end RDID operation can use CS# to high at any time during data out. (see *Figure 11*.)

While Program/Erase operation is in progress, it will not decode the RDID instruction, so there's no effect on the cycle of program/erase operation which is currently in progress. When CS# goes high, the device is at standby stage.

### (4) Read Status Register (RDSR)

The RDSR instruction is for reading Status Register Bits. The Read Status Register can be read at any time (even in program/erase/write status register condition) and continuously. It is recommended to check the Write in Progress (WIP) bit before sending a new instruction when a program, erase, or write status register operation is in progress.

The sequence of issuing RDSR instruction is: CS# goes low→sending RDSR instruction code→Status Register data out on SO (see *Figure 12*)

The definition of the status register bits is as below:

**WIP bit.** The Write in Progress (WIP) bit, a volatile bit, indicates whether the device is busy in program/erase/write status register progress. When WIP bit sets to 1, which means the device is busy in program/erase/write status register progress. When WIP bit sets to 0, which means the device is not in progress of program/erase/write status register cycle.

**WEL bit.** The Write Enable Latch (WEL) bit, a volatile bit, indicates whether the device is set to internal write enable latch. When WEL bit sets to 1, which means the internal write enable latch is set, the device can accept program/erase/write status register instruction. When WEL bit sets to 0, which means no internal write enable latch; the device will not accept program/erase/write status register instruction. The program/erase command will be ignored if it is applied to a protected memory area.

**BP3, BP2, BP1, BP0 bits.** The Block Protect (BP3, BP2, BP1, BP0) bits, non-volatile bits, indicate the protected area(as defined in *table 2*) of the device to against the program/erase instruction without hardware protection mode being set. To write the Block Protect (BP3, BP2, BP1, BP0) bits requires the Write Status Register (WRSR) instruction to be executed. Those bits define the protected area of the memory to against Page Program (PP), Sector Erase (SE), Block Erase (BE) and Chip Erase(CE) instructions (only if all Block Protect bits set to 0, the CE instruction can be executed).

**QE bit.** The Quad Enable (QE) bit, non-volatile bit, performs Quad when it is reset to "0" (factory default) to enable WP# or is set to "1" to enable Quad SIO2 and SIO3.

**SRWD bit.** The Status Register Write Disable (SRWD) bit, non-volatile bit, which is set to "0" (factory default). The SRWD bit is operated together with Write Protection (WP#/SIO2) pin for providing hardware protection mode. The hardware protection mode requires SRWD sets to 1 and WP#/SIO2 pin signal is low stage. In the hardware protection mode, the Write Status Register (WRSR) instruction is no longer accepted for execution and the SRWD bit and Block Protect bits (BP3, BP2, BP1, BP0) are read only.

**Status Register**

| bit7 | bit6 | bit5 | bit4 | bit3 | bit2 | bit1 | bit0 |
|---|---|---|---|---|---|---|---|
| SRWD (status register write protect) | QE (Quad Enable) | BP3 (level of protected block) | BP2 (level of protected block) | BP1 (level of protected block) | BP0 (level of protected block) | WEL (write enable latch) | WIP (write in progress bit) |
| 1=status register write disable | 1=Quad Enable 0=not Quad Enable | *(note 1)* | *(note 1)* | *(note 1)* | *(note 1)* | 1=write enable 0=not write enable | 1=write operation 0=not in write operation |
| Non-volatile bit | Non-volatile bit | Non-volatile bit | Non-volatile bit | Non-volatile bit | Non-volatile bit | volatile bit | volatile bit |

***Note 1:*** see the table 2 "*Protected Area Size*".

**(5) Write Status Register (WRSR)**

The WRSR instruction is for changing the values of Status Register Bits. Before sending WRSR instruction, the Write Enable (WREN) instruction must be decoded and executed to set the Write Enable Latch (WEL) bit in advance. The WRSR instruction can change the value of Block Protect (BP3, BP2, BP1, BP0) bits to define the protected area of memory (as shown in *table 2*). The WRSR also can set or reset the Quad enable (QE) bit and set or reset the Status Register Write Disable (SRWD) bit in accordance with Write Protection (WP#/SIO2) pin signal, but has no effect on bit1(WEL) and bit0 (WIP) of the statur register. The WRSR instruction cannot be executed once the Hardware Protected Mode (HPM) is entered.

The sequence of issuing WRSR instruction is: CS# goes low→sending WRSR instruction code→Status Register data on SI→ CS# goes high. (see *Figure 13*)

The CS# must go high exactly at the byte boundary; otherwise, the instruction will be rejected and not executed. The self-timed Write Status Register cycle time (tW) is initiated as soon as Chip Select (CS#) goes high. The Write in Progress (WIP) bit still can be check out during the Write Status Register cycle is in progress. The WIP sets 1 during the tW timing, and sets 0 when Write Status Register Cycle is completed, and the Write Enable Latch (WEL) bit is reset.

**Table 6. Protection Modes**

| Mode | Status register condition | WP# and SRWD bit status | Memory |
|---|---|---|---|
| Software protection mode (SPM) | Status register can be written in (WEL bit is set to "1") and the SRWD, BP0-BP3, QE bits can be changed | WP#=1 and SRWD bit=0, or WP#=0 and SRWD bit=0, or WP#=1 and SRWD=1 | The protected area cannot be program or erase. |
| Hardware protection mode (HPM) | The SRWD, BP0-BP3, QE of status register bits cannot be changed | WP#=0, SRWD bit=1 | The protected area cannot be program or erase. |

***Note:***
1. As defined by the values in the Block Protect (BP3, BP2, BP1, BP0) bits of the Status Register, as shown in *Table 2*.

As the above table showing, the summary of the Software Protected Mode (SPM) and Hardware Protected Mode (HPM).

**Software Protected Mode (SPM):**
- When SRWD bit=0, no matter WP#/SIO2 is low or high, the WREN instruction may set the WEL bit and can change the values of SRWD, BP3, BP2, BP1, BP0 and QE. The protected area, which is defined by BP3, BP2, BP1, BP0, is at software protected mode (SPM).
- When SRWD bit=1 and WP#/SIO2 is high, the WREN instruction may set the WEL bit can change the values of SRWD, BP3, BP2, BP1, BP0 and QE. The protected area, which is defined by BP3, BP2, BP1, BP0, is at software protected mode (SPM)

***Note:***
If SRWD bit=1 but WP#/SIO2 is low, it is impossible to write the Status Register even if the WEL bit has previously been set. It is rejected to write the Status Register and not be executed.

**Hardware Protected Mode (HPM):**
- When SRWD bit=1, and then WP#/SIO2 is low (or WP#/SIO2 is low before SRWD bit=1), it enters the hardware protected mode (HPM). The data of the protected area is protected by software protected mode by BP3, BP2, BP1, BP0 and hardware protected mode by the WP#/SIO2 to against data modification.

***Note:***
To exit the hardware protected mode requires WP#/SIO2 driving high once the hardware protected mode is entered. If the WP#/SIO2 pin is permanently connected to high, the hardware protected mode can never be entered; only can use software protected mode via BP3, BP2, BP1, BP0.
If the system goes into four I/O read mode, the feature of HPM will be disabled.

**(6) Read Data Bytes (READ)**

The read instruction is for reading data out. The address is latched on rising edge of SCLK, and data shifts out on the falling edge of SCLK at a maximum frequency fR. The first address can be at any location. The address is automatically increased to the next higher address after each byte data is shifted out, so the whole memory can be read out at a single READ instruction. The address counter rolls over to 0 when the highest address has been reached.

The sequence of issuing READ instruction is: CS# goes low→ sending READ instruction code→ 3-byte address on SI→data out on SO→to end READ operation can use CS# to high at any time during data out. (see *Figure 14*)

**(7) Read Data Bytes at Higher Speed (FAST_READ)**

The FAST_READ instruction is for quickly reading data out. The address is latched on rising edge of SCLK, and data of each bit shifts out on the falling edge of SCLK at a maximum frequency fC. The first address can be at any location. The address is automatically increased to the next higher address after each byte data is shifted out, so the whole memory can be read out at a single FAST_READ instruction. The address counter rolls over to 0 when the highest address has been reached.

The sequence of issuing FAST_READ instruction is: CS# goes low→sending FAST_READ instruction code→ 3-byte address on SI→1-dummy byte address on SI→data out on SO→ to end FAST_READ operation can use CS# to high at any time during data out. (see *Figure 15*)

While Program/Erase/Write Status Register cycle is in progress, FAST_READ instruction is rejected without any impact on the Program/Erase/Write Status Register current cycle.

**(8) 2 x I/O Read Mode (2READ)**

The 2READ instruction enable double throughput of Serial Flash in read mode. The address is latched on rising edge of SCLK, and data of every two bits (interleave on 2 I/O pins) shift out on the falling edge of SCLK at a maximum frequency fT. The first address can be at any location. The address is automatically increased to the next higher address after each byte data is shifted out, so the whole memory can be read out at a single 2READ instruction. The address counter rolls over to 0 when the highest address has been reached. Once writing 2READ instruction, the following address/dummy/data out will perform as 2-bit instead of previous 1-bit.

The sequence of issuing 2READ instruction is: CS# goes low→ sending 2READ instruction→ 24-bit address interleave on SIO1 & SIO0→4 dummy cycles on SIO1 & SIO0→data out interleave on SIO1 & SIO0→ to end 2READ operation can use CS# to high at any time during data out (see *Figure 16* for 2 x I/O Read Mode Timing Waveform).

While Program/Erase/Write Status Register cycle is in progress, 2READ instruction is rejected without any impact on the Program/Erase/Write Status Register current cycle.

**(9) 4 x I/O Read Mode (4READ)**

The 4READ instruction enable quad throughput of Serial Flash in read mode. A Quad Enable (QE) bit of status Register must be set to "1" before sending the 4READ instruction. The address is latched on rising edge of SCLK, and data of every four bits (interleave on 4 I/O pins) shift out on the falling edge of SCLK at a maximum frequency fQ. The first address can be at any location. The address is automatically increased to the next higher address after each byte data is shifted out, so the whole memory can be read out at a single 4READ instruction. The address counter rolls over to 0 when the highest address has been reached. Once writing 4READ instruction, the following address/dummy/data out will perform as 4-bit instead of previous 1-bit.

The sequence of issuing 4READ instruction is: CS# goes low→ sending 4READ instruction→ 24-bit address interleave on SIO3, SIO2, SIO1 & SIO0→ 6 dummy cycles→data out interleave on SIO3, SIO2, SIO1 & SIO0→ to end 4READ operation can use CS# to high at any time during data out (see *Figure 17* for 4 x I/O Read Mode Timing Waveform).

Another sequence of issuing 4 READ instruction especially useful in random access is : CS# goes low→sending 4 READ instruction→24-bit address interleave on SIO3, SIO2, SIO1 & SIO0 →performance enhance toggling bit P[7:0]→ 4 dummy cycles →data out interleave on SIO3, SIO2, SIO1 and SIO0 till CS# goes high →CS# goes low (reduce 4 Read instruction) →24-bit random access address (see *Figure 18* for 4x I/O read enhance performance mode timing waveform).

In the performance-enhancing mode (Note of *Figure. 18*), P[7:4] must be toggling with P[3:0] ; likewise P[7:0]=A5h,5Ah,F0h or 0Fh can make this mode continue and reduce the next 4READ instruction. Once P[7:4] is no longer toggling with P[3:0]; likewise P[7:0]=FFh,00h,AAh or 55h. And afterwards CS# is raised or issuing FF command (CS# goes high → CS# goes low→sending 0xFF→CS# goes high) instead of no toggling, the system then will escape from performance enhance mode and return to normal opertaion. In these cases, tSHSL=15ns(min) will be specified.

While Program/Erase/Write Status Register cycle is in progress, 4READ instruction is rejected without any impact on the Program/Erase/Write Status Register current cycle.

**(10) Sector Erase (SE)**

The Sector Erase (SE) instruction is for erasing the data of the chosen sector to be "1". The instruction is used for any 4K-byte sector. A Write Enable (WREN) instruction must execute to set the Write Enable Latch (WEL) bit before sending the Sector Erase (SE). Any address of the sector (see *table 3*) is a valid address for Sector Erase (SE) instruction. The CS# must go high exactly at the byte boundary (the eighth bit of last address byte been latched-in); otherwise, the instruction will be rejected and not executed.

Address bits [Am-A12] (Am is the most significant address) select the sector address.

The sequence of issuing SE instruction is: CS# goes low→sending SE instruction code→3-byte address on SI →CS# goes high. (see Figure 21)

The self-timed Sector Erase Cycle time (tSE) is initiated as soon as Chip Select (CS#) goes high. The Write in Progress (WIP) bit still can be check out during the Sector Erase cycle is in progress. The WIP sets 1 during the tSE timing, and sets 0 when Sector Erase Cycle is completed, and the Write Enable Latch (WEL) bit is reset. If the page is protected by BP3, BP2, BP1, BP0 bits, the Sector Erase (SE) instruction will not be executed on the page.

**(11) Block Erase (BE)**

The Block Erase (BE) instruction is for erasing the data of the chosen block to be "1". The instruction is used for 64K-byte block erase operation. A Write Enable (WREN) instruction must execute to set the Write Enable Latch (WEL) bit before sending the Block Erase (BE). Any address of the block (see *table 3*) is a valid address for Block Erase (BE) instruction. The CS# must go high exactly at the byte boundary (the eighth bit of address byte been latched-in); otherwise, the instruction will be rejected and not executed.

The sequence of issuing BE instruction is: CS# goes low →sending BE instruction code→3-byte address on SI →CS# goes high. (see *Figure 22*)

The self-timed Block Erase Cycle time (tBE) is initiated as soon as Chip Select (CS#) goes high. The Write in Progress (WIP) bit still can be check out during the Sector Erase cycle is in progress. The WIP sets 1 during the tBE timing, and sets 0 when Sector Erase Cycle is completed, and the Write Enable Latch (WEL) bit is reset. If the page is protected by BP3, BP2, BP1, BP0 bits, the Block Erase (BE) instruction will not be executed on the page.

**(12) Chip Erase (CE)**

The Chip Erase (CE) instruction is for erasing the data of the whole chip to be "1". A Write Enable (WREN) instruction must execute to set the Write Enable Latch (WEL) bit before sending the Chip Erase (CE). The CS# must go high exactly at the byte boundary (the eighth bit of instruction code been latched-in), otherwise the instruction will be rejected and not executed.

The sequence of issuing CE instruction is: CS# goes low→ sending CE instruction code→ CS# goes high. (see *Figure 23*)

The self-timed Chip Erase Cycle time (tCE) is initiated as soon as Chip Select (CS#) goes high. The Write in Progress (WIP) bit still can be check out during the Chip Erase cycle is in progress. The WIP sets 1 during the tCE timing, and sets 0 when Chip Erase Cycle is completed, and the Write Enable Latch (WEL) bit is reset. If the chip is protected by BP3, BP2, BP1, BP0 bits, the Chip Erase (CE) instruction will not be executed. It will be only executed when BP3, BP2, BP1, BP0 all set to "0".

**(13) Page Program (PP)**

The Page Program (PP) instruction is for programming the memory to be "0". A Write Enable (WREN) instruction must execute to set the Write Enable Latch (WEL) bit before sending the Page Program (PP). The device programs only the last 256 data bytes sent to the device. The last address byte (the 8 least significant address bits, A7-A0) should be set to 0 for 256 bytes page program. If A7-A0 are not all zero, transmitted data that exceed page length are programmed from the starting address (24-bit address that last 8 bit are all 0) of currently selected page. If the data bytes sent to the device exceeds 256, the last 256 data byte is programmed at the request page and previous data will be disregarded. If the data bytes sent to the device has not exceeded 256, the data will be programmed at the request address of the page. There will be no effort on the other data bytes of the same page.

The sequence of issuing PP instruction is: CS# goes low→sending PP instruction code→3-byte address on SI→ at least 1-byte on data on SI→ CS# goes high. (see *Figure 19*)

The CS# must be kept to low during the whole Page Program instruction cycle; The CS# must go high exactly at the byte boundary( the eighth bit of data being latched in), otherwise the instruction will be rejected and will not be executed.

The self-timed Page Program Cycle time (tPP) is initiated as soon as Chip Select (CS#) goes high. The Write in

Progress (WIP) bit still can be check out during the Page Program cycle is in progress. The WIP sets 1 during the tPP timing, and sets 0 when Page Program Cycle is completed, and the Write Enable Latch (WEL) bit is reset. If the page is protected by BP3, BP2, BP1, BP0 bits, the Page Program (PP) instruction will not be executed.

**(14) 4 x I/O Page Program (4PP)**

The Quad Page Program (4PP) instruction is for programming the memory to be "0". A Write Enable (WREN) instruction must execute to set the Write Enable Latch (WEL) bit and Quad Enable (QE) bit must be set to "1" before sending the Quad Page Program (4PP). The Quad Page Programming takes four pins: SIO0, SIO1, SIO2, and SIO3 as address and data input, which can improve programmer performance and the effectiveness of application of lower clock less than 85MHz. For system with faster clock, the Quad page program cannot provide more actual favors, because the required internal page program time is far more than the time data flows in. Therefore, we suggest that while executing this command (especially during sending data), user can slow the clock speed down to 85MHz below. The other function descriptions are as same as standard page program.

The sequence of issuing 4PP instruction is: CS# goes low→sending 4PP instruction code→3-byte address on SIO[3:0]→ at least 1-byte on data on SIO[3:0]→ CS# goes high. (see Figure 20)

**(15) Deep Power-down (DP)**

The Deep Power-down (DP) instruction is for setting the device on the minimizing the power consumption (to entering the Deep Power-down mode), the standby current is reduced from ISB1 to ISB2). The Deep Power-down mode requires the Deep Power-down (DP) instruction to enter, during the Deep Power-down mode, the device is not active and all Write/Program/Erase instruction are ignored. When CS# goes high, it's only in standby mode not deep power-down mode. It's different from Standby mode.

The sequence of issuing DP instruction is: CS# goes low→sending DP instruction code→ CS# goes high. (see *Figure 24*)

Once the DP instruction is set, all instruction will be ignored except the Release from Deep Power-down mode (RDP) and Read Electronic Signature (RES) instruction (those instructions allow the ID being reading out). When Power-down, the deep power-down mode automatically stops, and when power-up, the device automatically is in standby mode. For RDP instruction the CS# must go high exactly at the byte boundary (the latest eighth bit of instruction code been latched-in); otherwise, the instruction will not executed. As soon as Chip Select (CS#) goes high, a delay of tDP is required before entering the Deep Power-down mode.

**(16) Release from Deep Power-down (RDP), Read Electronic Signature (RES)**

The Release from Deep Power-down (RDP) instruction is terminated by driving Chip Select (CS#) High. When Chip Select (CS#) is driven High, the device is put in the Stand-by Power mode. If the device was not previously in the Deep Power-down mode, the transition to the Stand-by Power mode is immediate. If the device was previously in the Deep Power-down mode, though, the transition to the Stand-by Power mode is delayed by tRES2, and Chip Select (CS#) must remain High for at least tRES2(max), as specified in *Table 10. AC Characteristics*. Once in the Stand-by Power mode, the device waits to be selected, so that it can receive, decode and execute instructions. The RDP instruction is only for releasing from Deep Power Down Mode.

RES instruction is for reading out the old style of 8-bit Electronic Signature, whose values are shown as *table of ID Definitions* in next page. This is not the same as RDID instruction. It is not recommended to use for new design. For new design, please use RDID instruction.

The sequence is shown as *Figure 25* and *Figure 26*. Even in Deep power-down mode, the RDP and RES are also

allowed to be executed, only except the device is in progress of program/erase/write cycle; there's no effect on the current program/erase/write cycle in progress.

The RES instruction is ended by CS# goes high after the ID been read out at least once. The ID outputs repeatedly if continuously send the additional clock cycles on SCLK while CS# is at low. If the device was not previously in Deep Power-down mode, the device transition to standby mode is immediate. If the device was previously in Deep Power-down mode, there's a delay of tRES2 to transit to standby mode, and CS# must remain to high at least tRES2(max). Once in the standby mode, the device waits to be selected, so it can be receive, decode, and execute instruction.

**(17) Read Electronic Manufacturer ID & Device ID (REMS), (REMS2), (REMS4)**

The REMS, REMS2 & REMS4 instruction is an alternative to the Release from Power-down/Device ID instruction that provides both the JEDEC assigned manufacturer ID and the specific device ID. The REMS4 instruction is recommended to use for 4 I/O identification and REMS2 instruction is recommended to use for 2 I/O identification.

The REMS, REMS2 & REMS4 instruction is very similar to the Release from Power-down/Device ID instruction. The instruction is initiated by driving the CS# pin low and shift the instruction code "90h" or "EFh" or "DFh" followed by two dummy bytes and one bytes address (A7~A0). After which, the Manufacturer ID for Macronix (C2h) and the Device ID are shifted out on the falling edge of SCLK with most significant bit (MSB) first as shown in *Figure 27*. The Device ID values are listed in *Table 7 of ID Definitions* in next page. If the one-byte address is initially set to 01h, then the device ID will be read first and then followed by the Manufacturer ID. The Manufacturer and Device IDs can be read continuously, alternating from one to the other. The instruction is completed by driving CS# high.

**Table 7. ID Definitions**

| | | | |
|---|---|---|---|
| RDID Command | manufacturer ID | memory type | memory density |
| | C2 | 24 | 15 |
| RES Command | electronic ID | | |
| | 24 | | |
| REMS/REMS2/REMS4/ Command | manufacturer ID | device ID | |
| | C2 | 24 | |

**(18) Enter Secured OTP (ENSO)**

The ENSO instruction is for entering the additional 512-bit secured OTP mode. The additional 512-bit secured OTP is independent from main array, which may use to store unique serial number for system identifier. After entering the Secured OTP mode, and then follow standard read or program, procedure to read out the data or update data. The Secured OTP data cannot be updated again once it is lock-down.

The sequence of issuing ENSO instruction is: CS# goes low→sending ENSO instruction to enter Secured OTP mode→ CS# goes high.

Please note that WRSR/WRSCUR commands are not acceptable during the access of secure OTP region, once security OTP is lock down, only read related commands are valid.

**(19) Exit Secured OTP (EXSO)**

The EXSO instruction is for exiting the additional 512-bit secured OTP mode.

The sequence of issuing EXSO instruction is: CS# goes low→sending EXSO instruction to exit Secured OTP mode→CS# goes high.

**(20) Read Security Register (RDSCUR)**

The RDSCUR instruction is for reading the value of Security Register bits. The Read Security Register can be read at any time (even in program/erase/write status register/write security register condition) and continuously.

The sequence of issuing RDSCUR instruction is : CS# goes low→ sending RDSCUR instruction → Security Register data out on SO→CS# goes high.

The definition of the Security Register bits is as below:

**Secured OTP Indicator bit.** The Secured OTP indicator bit shows the chip is locked by factory before ex- factory or not. When it is "0", it indicates non- factory lock; "1" indicates factory- lock.

**Lock-down Secured OTP (LDSO) bit.** By writing WRSCUR instruction, the LDSO bit may be set to "1" for customer lock-down purpose. However, once the bit is set to "1" (lock-down), the LDSO bit and the 512-bit Secured OTP area cannot be update any more. While it is in 512-bit secured OTP mode, main array access is not allowed.

**Table 8. Security Register Definition**

| bit7 | bit6 | bit5 | bit4 | bit3 | bit2 | bit1 | bit0 |
|---|---|---|---|---|---|---|---|
| x | x | x | x | x | x | LDSO (indicate if lock-down | Secured OTP indicator bit |
| reserved | reserved | reserved | reserved | reserved | reserved | 0 = not lock-down 1 = lock-down (cannot program/erase OTP) | 0 = non-factory lock 1 = factory lock |
| volatile bit | volatile bit | volatile bit | volatile bit | volatile bit | volatile bit | non-volatile bit | non-volatile bit |

**(21) Write Security Register (WRSCUR)**

The WRSCUR instruction is for changing the values of Security Register Bits. Unlike write status register, the WREN instruction is not required before sending WRSCUR instruction. The WRSCUR instruction may change the values of bit1 (LDSO bit) for customer to lock-down the 512-bit Secured OTP area. Once the LDSO bit is set to "1", the Secured OTP area cannot be updated any more.

The sequence of issuing WRSCUR instruction is :CS# goes low→sending WRSCUR instruction→CS# goes high.

The CS# must go high exactly at the boundary; otherwise, the instruction will be rejected and not executed.

## POWER-ON STATE

The device is at below states when power-up:
- Standby mode ( please note it is not deep power-down mode)
- Write Enable Latch (WEL) bit is reset

The device must not be selected during power-up and power-down stage unless the VCC achieves below correct level:
- VCC minimum at power-up stage and then after a delay of tVSL
- GND at power-down

Please note that a pull-up resistor on CS# may ensure a safe and proper power-up/down level.

An internal power-on reset (POR) circuit may protect the device from data corruption and inadvertent data change during power up state.

For further protection on the device, if the VCC does not reach the VCC minimum level, the correct operation is not guaranteed. The read, write, erase, and program command should be sent after the below time delay:
- tVSL after VCC reached VCC minimum level

The device can accept read command after VCC reached VCC minimum and a time delay of tVSL.
Please refer to the figure of "*power-up timing*".

***Note:***
- To stabilize the VCC level, the VCC rail decoupled by a suitable capacitor close to package pins is recommended. (generally around 0.1uF)

## ELECTRICAL SPECIFICATIONS

### Absolute Maximum Ratings

| Rating | | Value |
|---|---|---|
| Ambient Operating Temperature | Industrial grade | -40°C to 85°C |
| Storage Temperature | | -65°C to 150°C |
| Applied Input Voltage | | -0.5V to 4.6V |
| Applied Output Voltage | | -0.5V to 4.6V |
| VCC to Ground Potential | | -0.5V to 4.6V |

***NOTICE:***

1. Stresses greater than those listed under "Absolute Maximum Ratings" may cause permanent damage to the device. This is stress rating only and functional operational sections of this specification is not implied. Exposure to absolute maximum rating conditions for extended period may affect reliability.
2. Specifications contained within the following tables are subject to change.
3. During voltage transitions, all pins may overshoot Vss to -2.0V and Vcc to +2.0V for periods up to 20ns, see *Figure 2*, and *Figure 3*.

**Figure 2. Maximum Negative Overshoot Waveform**

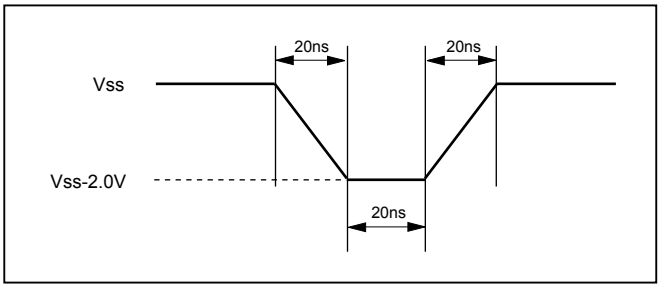


**Figure 3. Maximum Positive Overshoot Waveform**

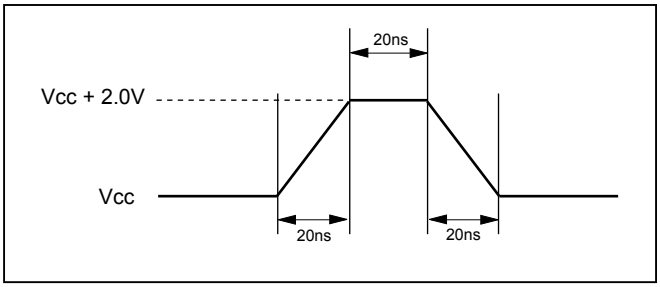


### Capacitance

TA = 25°C, f = 1.0 MHz

| SYMBOL | PARAMETER | MIN. | TYP | MAX. | UNIT | CONDITIONS |
|---|---|---|---|---|---|---|
| CIN | Input Capacitance | | | 6 | pF | VIN = 0V |
| COUT | Output Capacitance | | | 8 | pF | VOUT = 0V |

**Figure 4. Input Test Waveforms and Measurement Level**

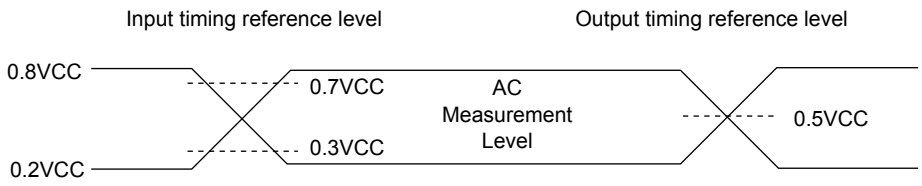


Note: Input pulse rise and fall time are <5ns

**Figure 5. Output Loading**

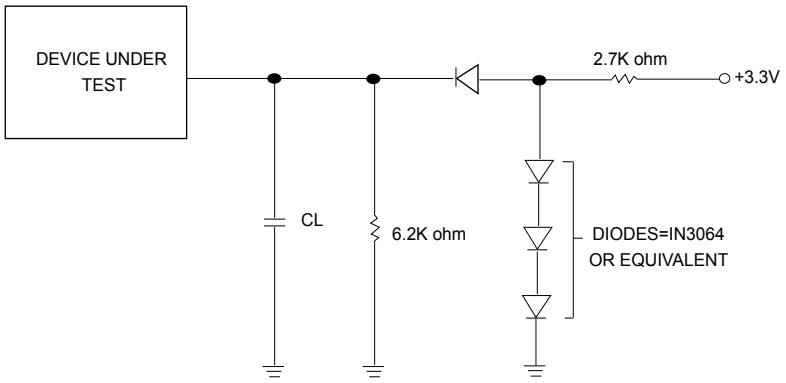


CL=30pF Including jig capacitance

**Table 9. DC Characteristics**

Temperature = -40°C to 85°C for Industrial grade, VCC = 2.7V ~ 3.6V

| SYMBOL | PARAMETER | NOTES | MIN. | TYP. | MAX. | UNITS | TEST CONDITIONS |
|---|---|---|---|---|---|---|---|
| ILI | Input Load Current | 1 | | | ± 2 | uA | VCC = VCC Max, VIN = VCC or GND |
| ILO | Output Leakage Current | 1 | | | ± 2 | uA | VCC = VCC Max, VOUT = VCC or GND |
| ISB1 | VCC Standby Current | 1 | | 15 | 25 | uA | VIN = VCC or GND, CS# = VCC |
| ISB2 | Deep Power-down Current | | | 2 | 20 | uA | VIN = VCC or GND, CS# = VCC |
| ICC1 | VCC Read | 1 | | | 25 | mA | f=104MHz, fQ=85MHz (4 x I/O read) SCLK=0.1VCC/0.9VCC, SO=Open |
| | | | | | 20 | mA | fT=85MHz (2 x I/O read) SCLK=0.1VCC/0.9VCC, SO=Open |
| | | | | | 10 | mA | f=33MHz, SCLK=0.1VCC/0.9VCC, SO=Open |
| ICC2 | VCC Program Current (PP) | 1 | | 15 | 20 | mA | Program in Progress, CS# = VCC |
| ICC3 | VCC Write Status Register (WRSR) Current | | | 3 | 20 | mA | Program status register in progress, CS#=VCC |
| ICC4 | VCC Sector Erase Current (SE) | 1 | | 9 | 20 | mA | Erase in Progress, CS#=VCC |
| ICC5 | VCC Chip Erase Current (CE) | 1 | | 15 | 20 | mA | Erase in Progress, CS#=VCC |
| VIL | Input Low Voltage | | -0.5 | | 0.3VCC | V | |
| VIH | Input High Voltage | | 0.7VCC | | VCC+0.4 | V | |
| VOL | Output Low Voltage | | | | 0.4 | V | IOL = 1.6mA |
| VOH | Output High Voltage | | VCC-0.2 | | | V | IOH = -100uA |

***Notes :***

1. Typical values at VCC = 3.3V, T = 25°C. These currents are valid for all product versions (package and speeds).
2. Typical value is calculated by simulation.

**Table 10. AC Characteristics**

Temperature = -40°C to 85°C for Industrial grade, VCC = 2.7V ~ 3.6V

| Symbol | Alt. | Parameter | | Min. | Typ. | Max. | Unit |
|---|---|---|---|---|---|---|---|
| fSCLK | fC | Clock Frequency for the following instructions: FAST_READ, SE, BE, CE, DP, RES, RDP, WREN, WRDI, RDID, RDSR, WRSR | | D.C. | | 104 | MHz |
| fPSCLK | fP | Clock Frequency for PP instructions | | D.C. | | 86 | MHz |
| | f4P | Clock Frequency for 4PP instructions | | D.C. | | 85 | MHz |
| fRSCLK | fR | Clock Frequency for READ instructions | | | | 33 | MHz |
| fTSCLK | fT | Clock Frequency for 2READ instructions | | | | 85 | MHz |
| | fQ | Clock Frequency for 4READ instructions | | | | 85 | MHz |
| tCH*(1)* | tCLH | Clock High Time (1633E-10G) | fC=104MHz | 4.7 | | | ns |
| | | | fR=33MHz | 13 | | | ns |
| tCL*(1)* | tCLL | Clock Low Time (1633E-10G) | fC=104MHz | 4.7 | | | ns |
| | | | fR=33MHz | 13 | | | ns |
| tCLCH*(2)* | | Clock Rise Time *(3)* (peak to peak) | | 0.1 | | | V/ns |
| tCHCL*(2)* | | Clock Fall Time *(3)* (peak to peak) | | 0.1 | | | V/ns |
| tSLCH | tCSS | CS# Active Setup Time (relative to SCLK) | | 5 | | | ns |
| tCHSL | | CS# Not Active Hold Time (relative to SCLK) | | 5 | | | ns |
| tDVCH | tDSU | Data In Setup Time | | 2 | | | ns |
| tCHDX | tDH | Data In Hold Time | | 5 | | | ns |
| tCHSH | | CS# Active Hold Time (relative to SCLK) | | 5 | | | ns |
| tSHCH | | CS# Not Active Setup Time (relative to SCLK) | | 5 | | | ns |
| tSHSL(3) | tCSH | CS# Deselect Time | Read | 15 | | | ns |
| | | | Write/Erase/Program | 50 | | | ns |
| tSHQZ(2) | tDIS | Output Disable Time | 2.7V-3.6V | | | 10 | ns |
| | | | 3.0V-3.6V | | | 8 | ns |
| tCLQV | tV | Clock Low to Output Valid Loading: 30pF/15pF | 2.7V-3.6V | | | 9/8 | ns |
| | | | 3.0V-3.6V | | | 8/6 | ns |
| tCLQX | tHO | Output Hold Time | | 1 | | | ns |
| tWHSL | | Write Protect Setup Time | | 20 | | | ns |
| tSHWL | | Write Protect Hold Time | | 100 | | | ns |
| tDP*(2)* | | CS# High to Deep Power-down Mode | | | | 10 | us |
| tRES1*(2)* | | CS# High to Standby Mode without Electronic Signature Read | | | | 8.8 | us |
| tRES2*(2)* | | CS# High to Standby Mode with Electronic Signature Read | | | | 8.8 | us |
| tW | | Write Status Register Cycle Time | | | 40 | 100 | ms |
| tBP | | Byte-Program | | | 9 | 50 | us |
| tPP | | Page Program Cycle Time | | | 0.6 | 3 | ms |
| tSE | | Sector Erase Cycle Time | | | 40 | 200 | ms |
| tBE | | Block Erase Cycle Time | | | 0.4 | 2 | s |
| tCE | | Chip Erase Cycle Time | | | 5 | 20 | s |

***Notes:***
1. tCH + tCL must be greater than or equal to 1/ f (fC or fR).
2. Value guaranteed by characterization, not 100% tested in production.
3. tSHSL=15ns from read instruction, tSHSL=50ns from Write/Erase/Program instruction.
4. Only applicable as a constraint for a WRSR instruction when SRWD is set at 1.
5. Test condition is shown as *Figure 4* and *Figure 5*.

## Timing Analysis

**Figure 6. Serial Input Timing**

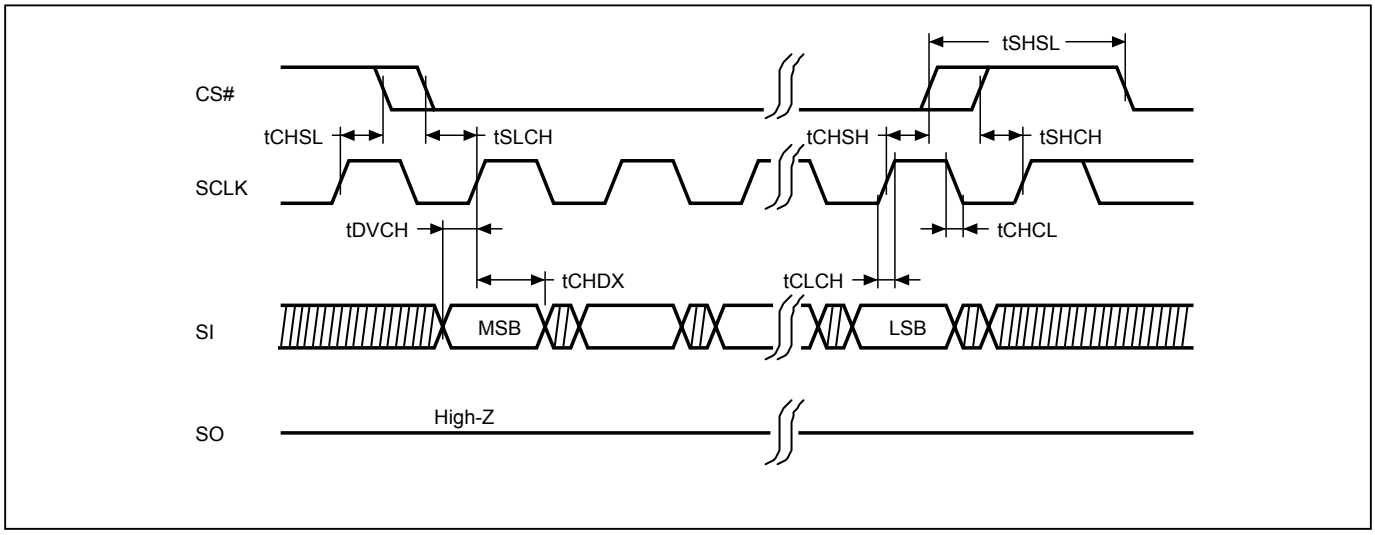


**Figure 7. Output Timing**

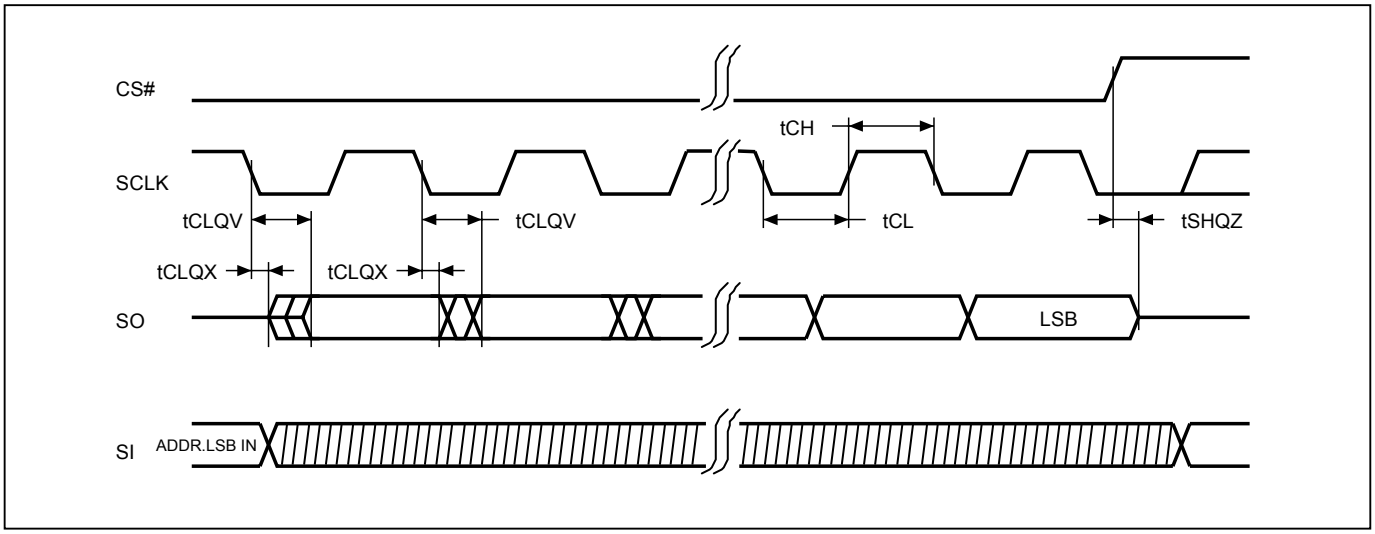

**Figure 8. WP# Setup Timing and Hold Timing during WRSR when SRWD=1**

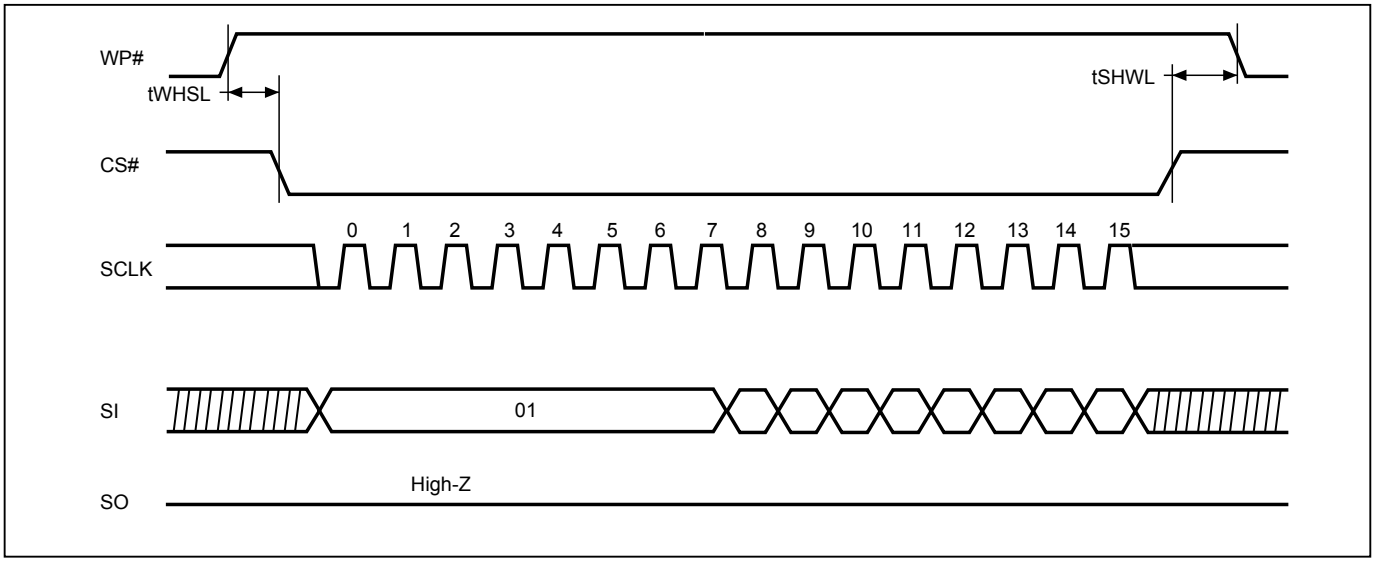


**Figure 9. Write Enable (WREN) Sequence (Command 06)**

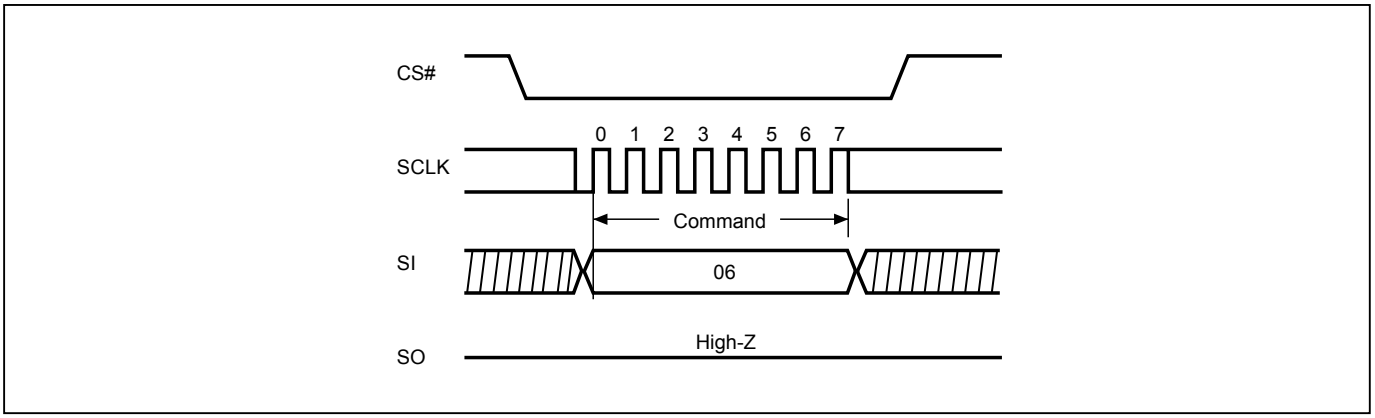


**Figure 10. Write Disable (WRDI) Sequence (Command 04)**

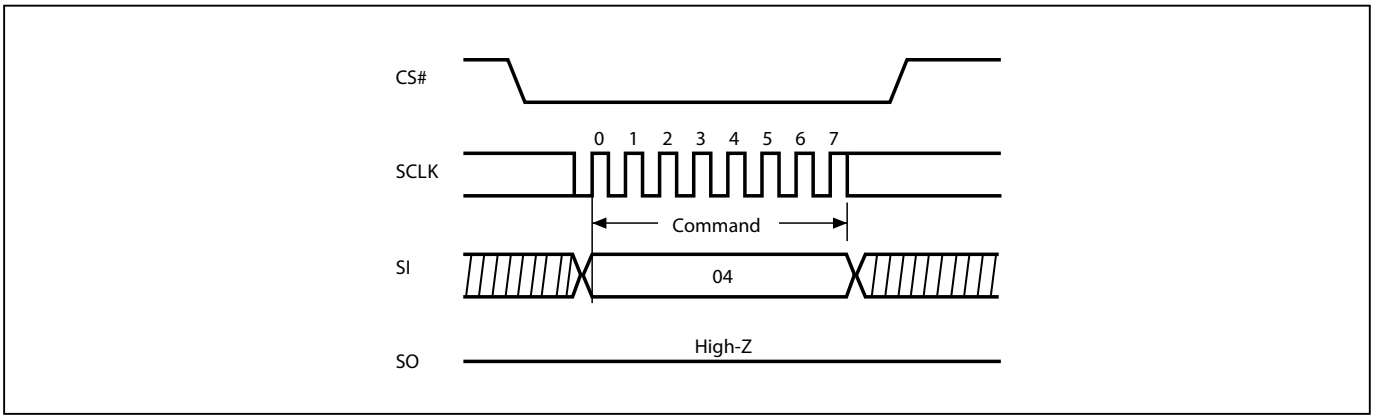

**Figure 11. Read Identification (RDID) Sequence (Command 9F)**

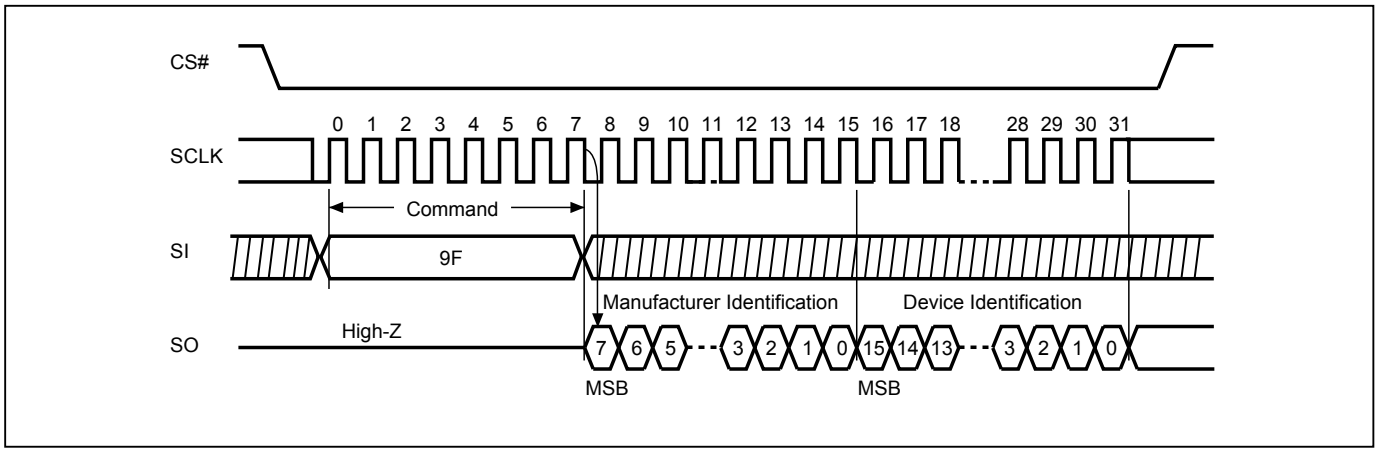


**Figure 12. Read Status Register (RDSR) Sequence (Command 05)**

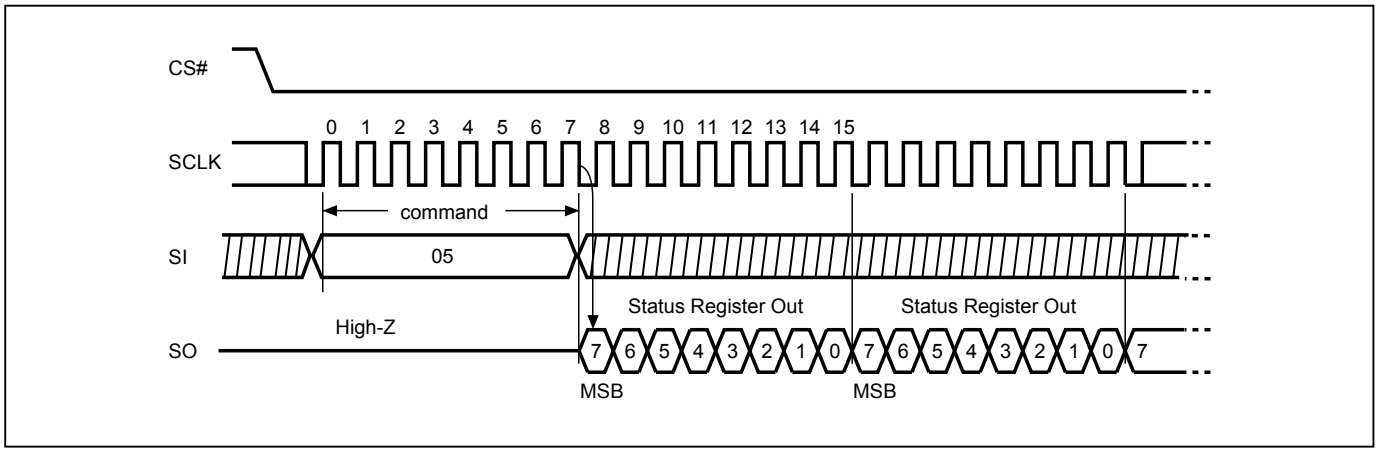


**Figure 13. Write Status Register (WRSR) Sequence (Command 01)**

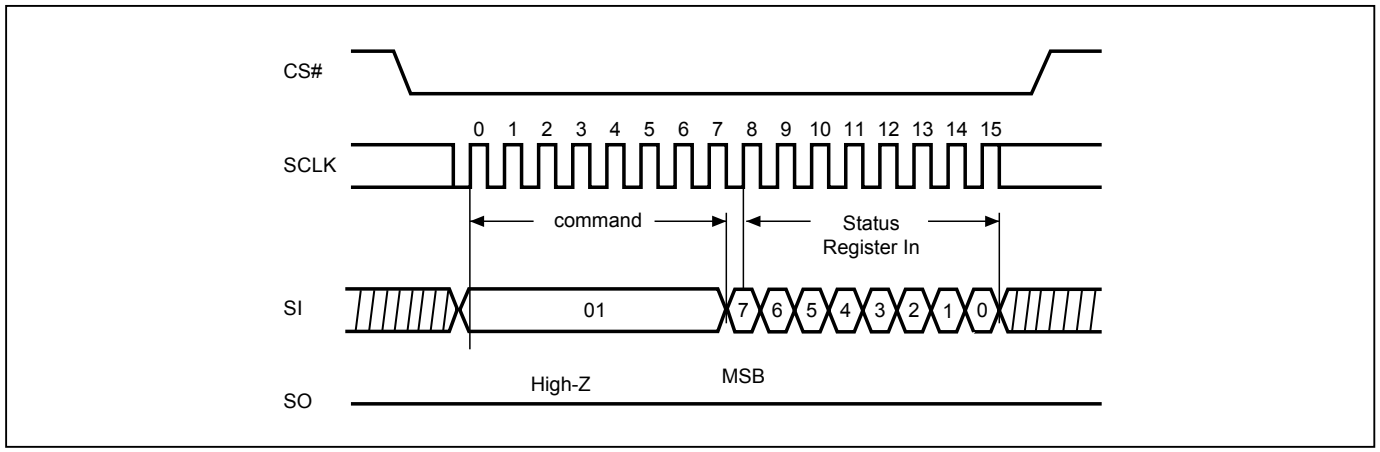

**Figure 14. Read Data Bytes (READ) Sequence (Command 03)**

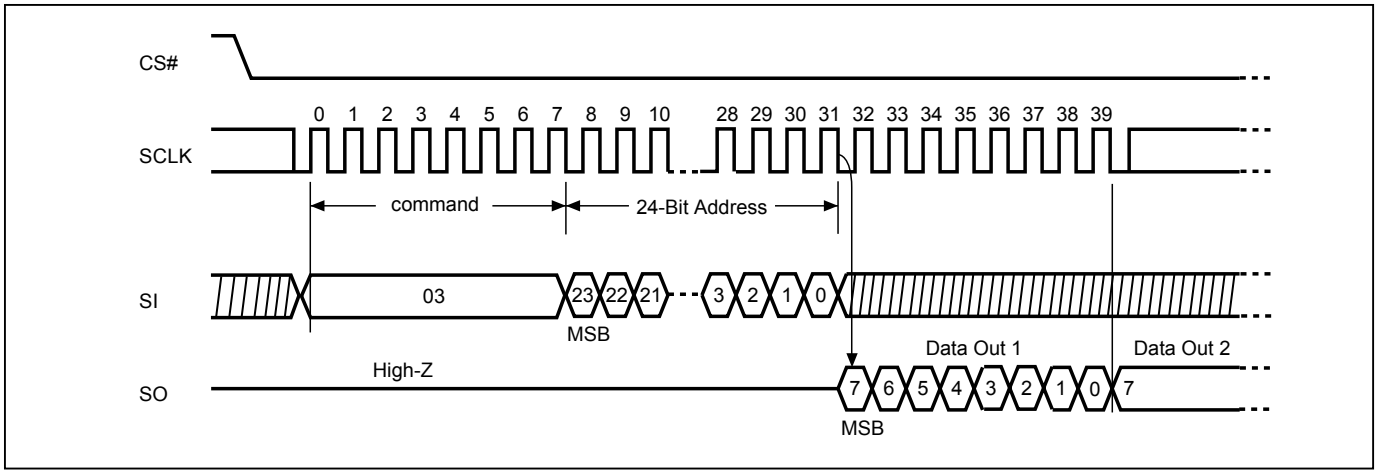


**Figure 15. Read at Higher Speed (FAST_READ) Sequence (Command 0B)**

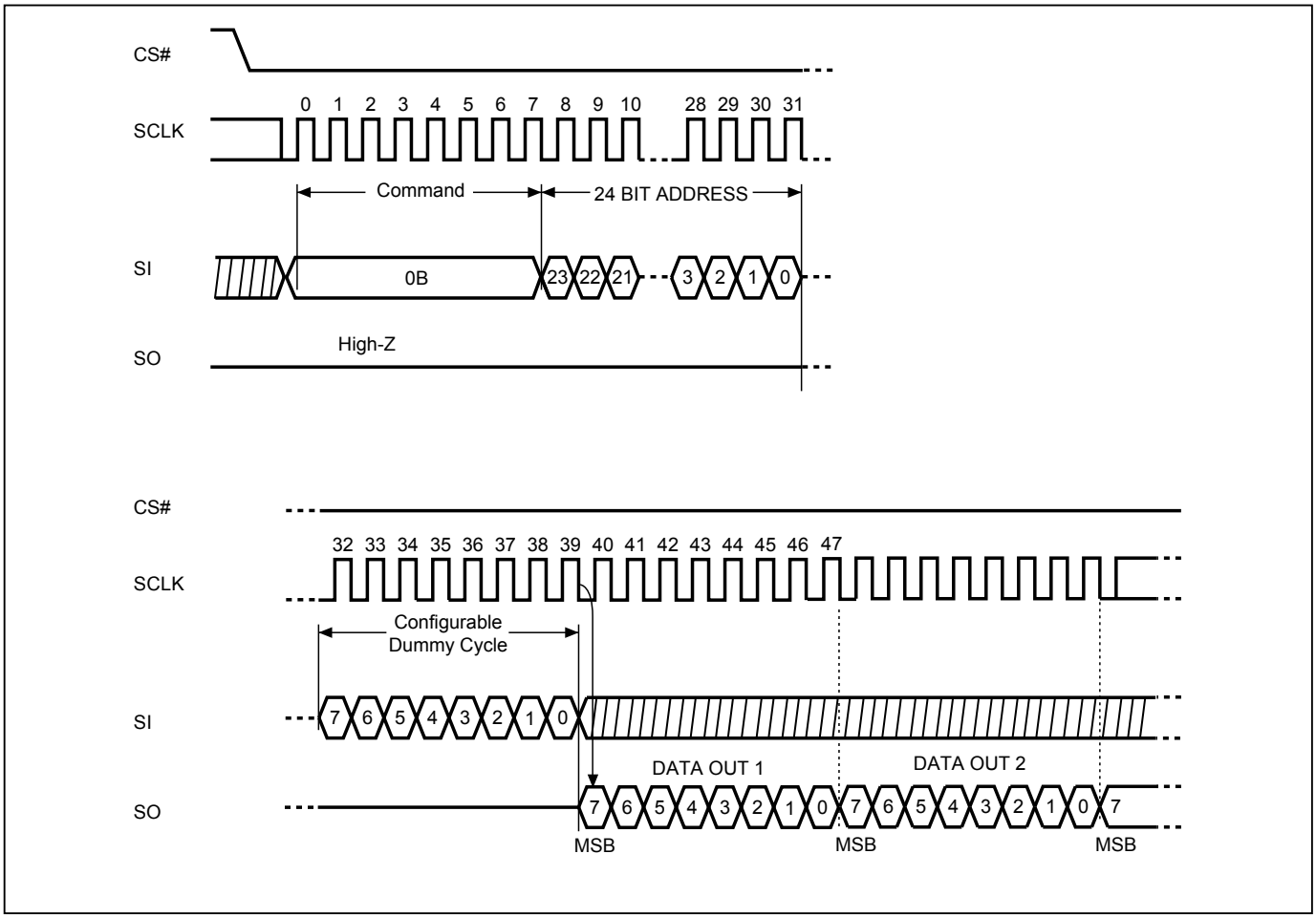

**Figure 16. 2 x I/O Read Mode Sequence (Command BB)**

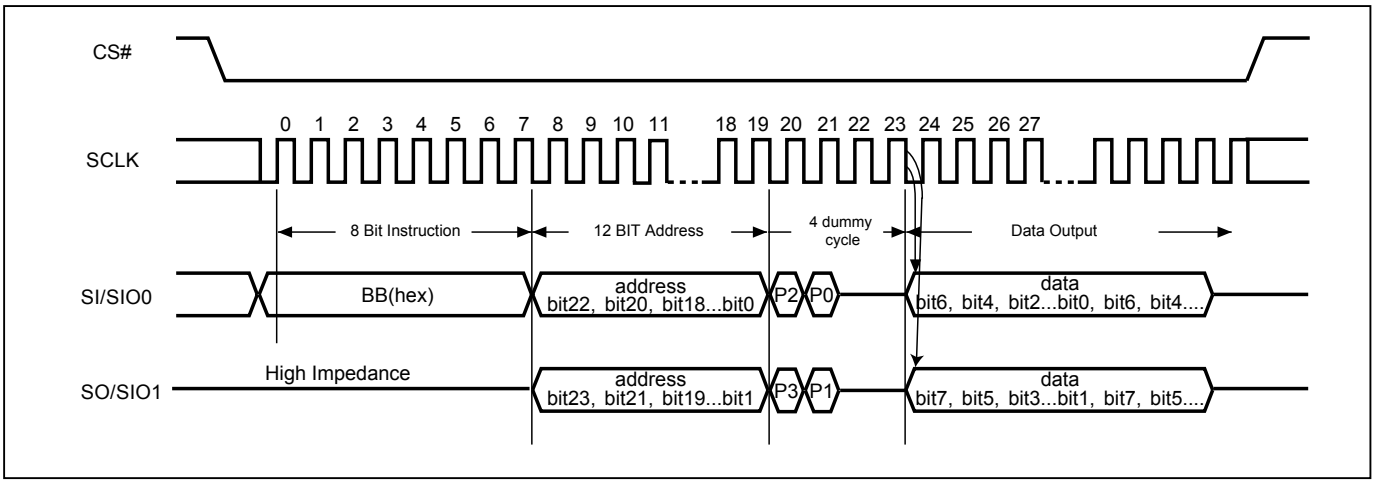


***Note:***

1. SI/SIO0 or SO/SIO1 should be kept "00" or "11" in the first 2 dummy cycles.
   In other words, P2=P0 or P3=P1 is necessary.

**Figure 17. 4 x I/O Read Mode Sequence (Command EB)**

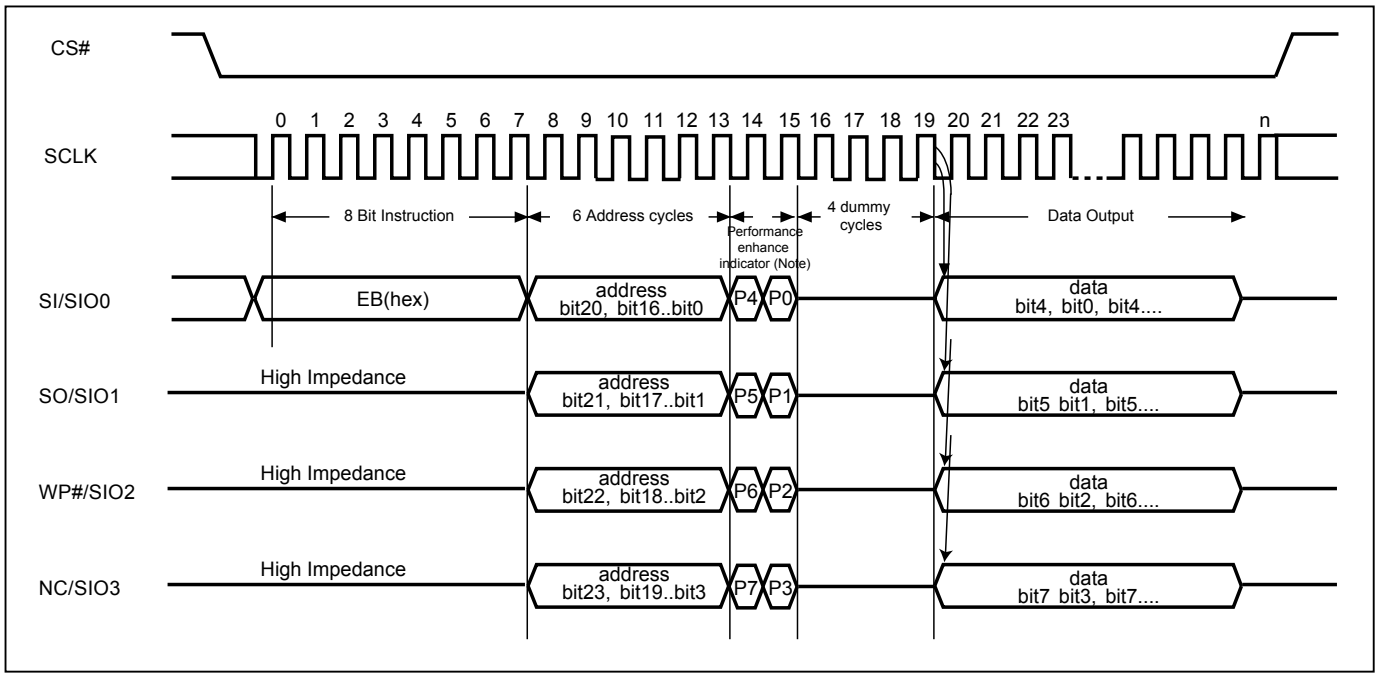


***Notes:***

1. Hi-impedance is inhibited for the two clock cycles.
2. P7≠P3, P6≠P2, P5≠P1 & P4≠P0 (Toggling) is inhibited.

**Figure 18. 4 x I/O Read enhance performance Mode Sequence (Command EB)**

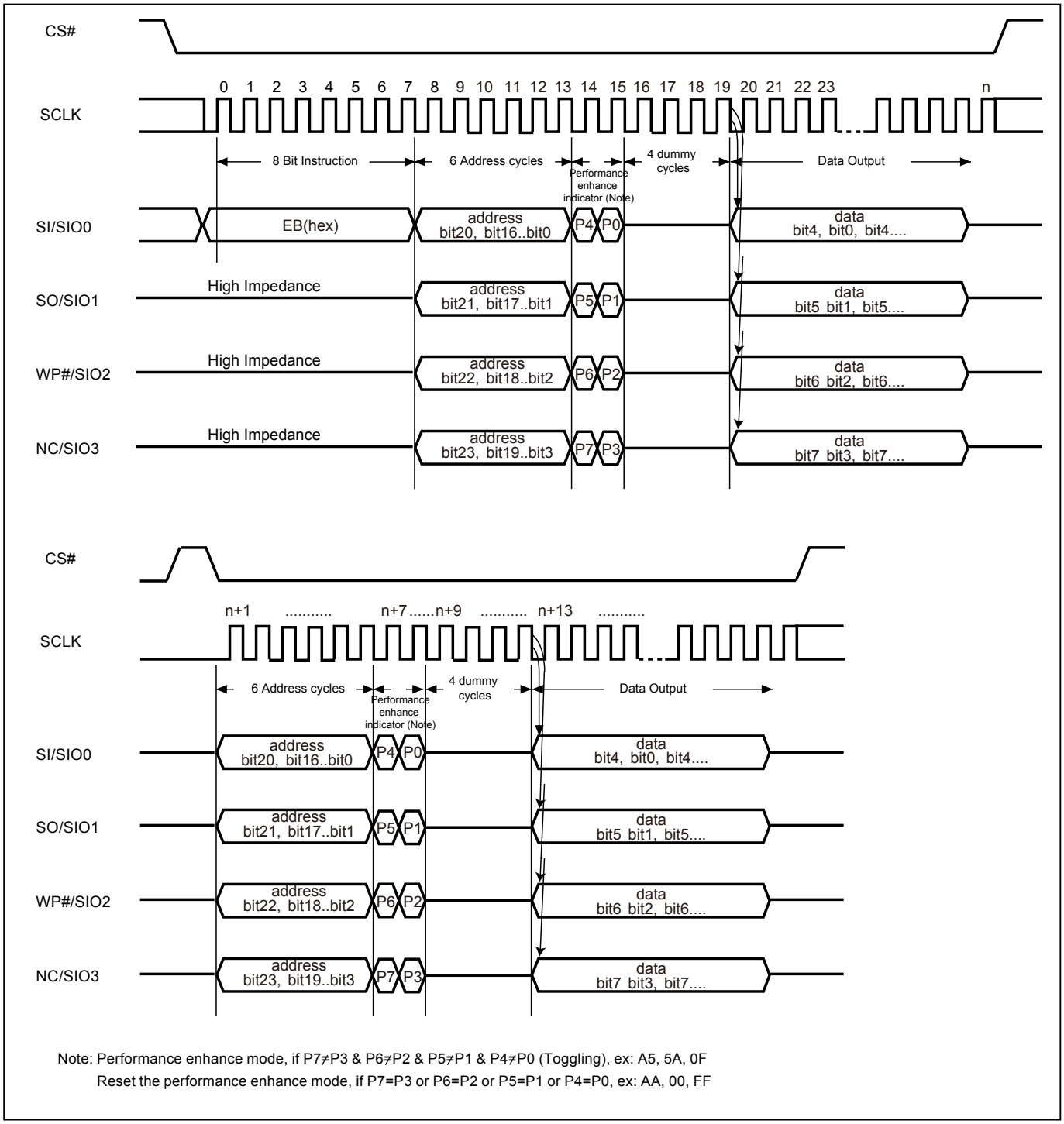


Note: Performance enhance mode, if P7≠P3 & P6≠P2 & P5≠P1 & P4≠P0 (Toggling), ex: A5, 5A, 0F
Reset the performance enhance mode, if P7=P3 or P6=P2 or P5=P1 or P4=P0, ex: AA, 00, FF

**Figure 19. Page Program (PP) Sequence (Command 02)**

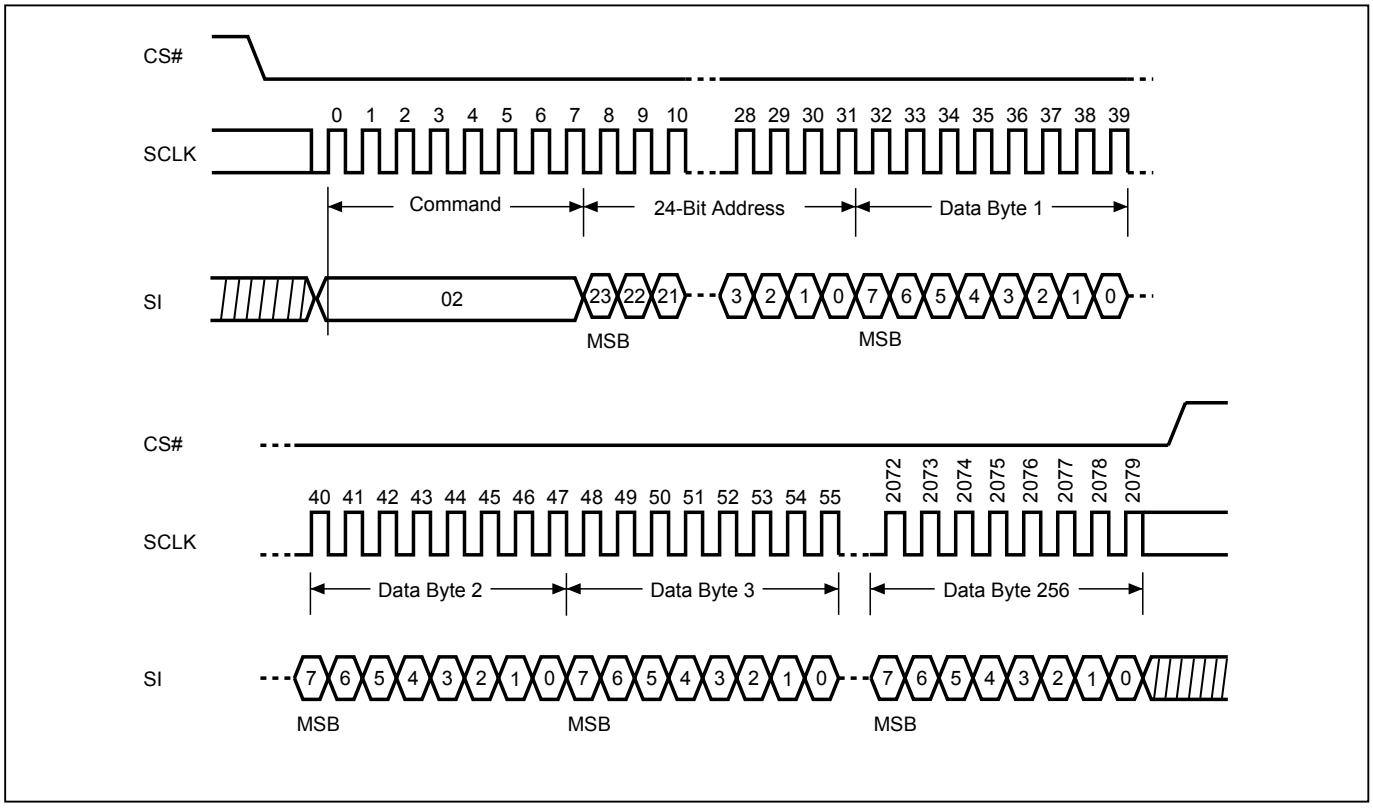


**Figure 20. 4 x I/O Page Program (4PP) Sequence (Command 38)**

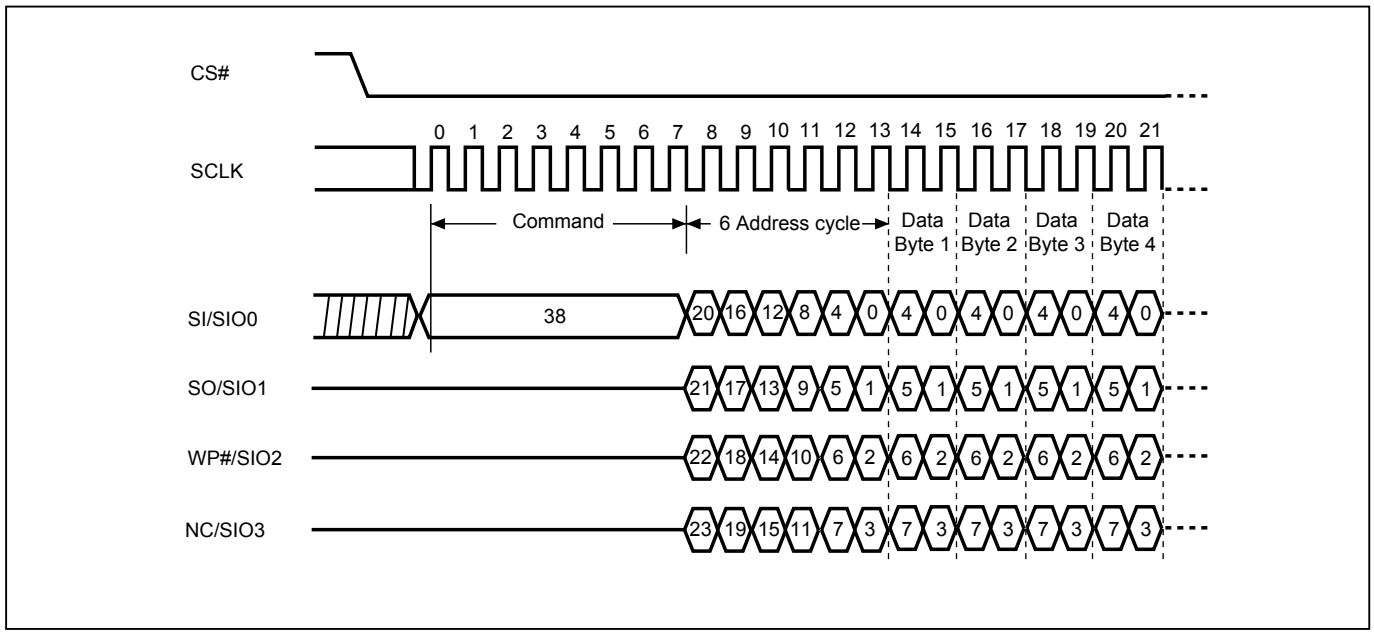

**Figure 21. Sector Erase (SE) Sequence (Command 20)**

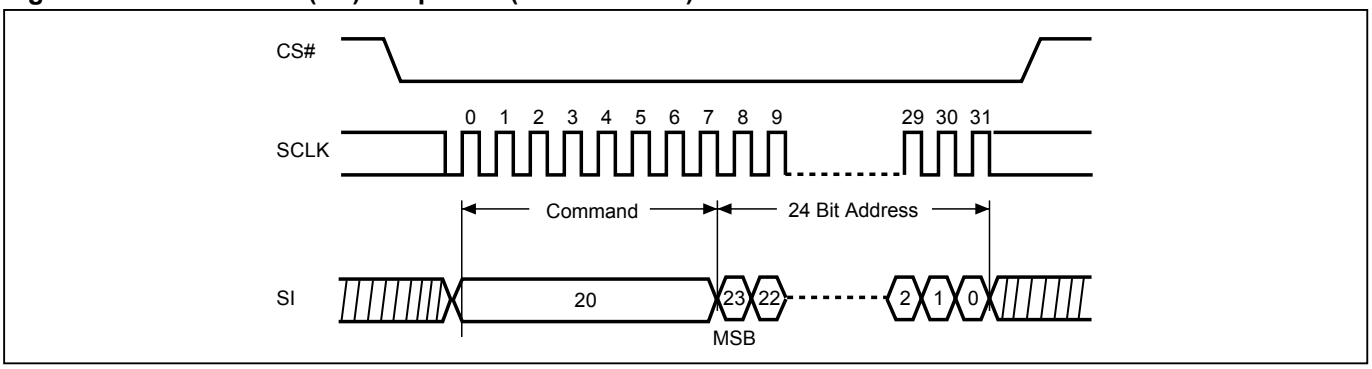


***Note:*** SE command is 20(hex).

**Figure 22. Block Erase (BE) Sequence (Command D8)**

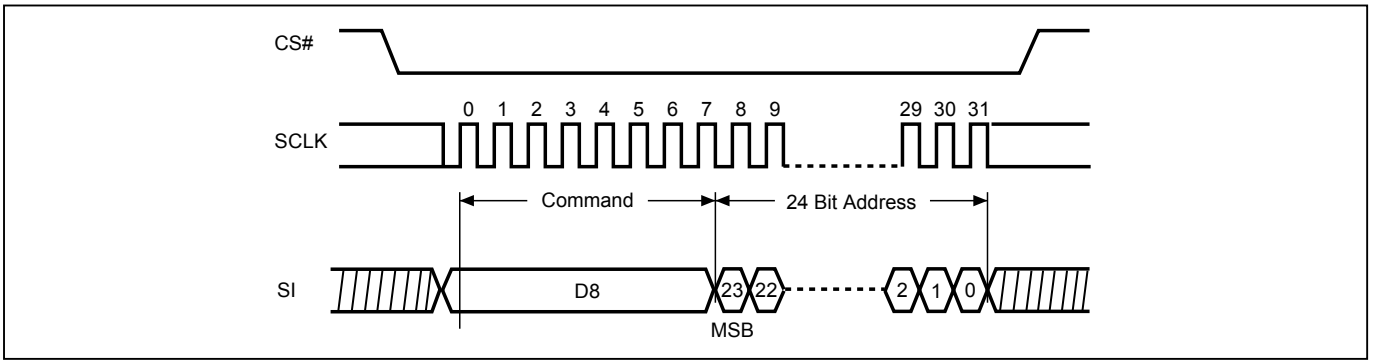


***Note:*** BE command is D8(hex).

**Figure 23. Chip Erase (CE) Sequence (Command 60 or C7)**

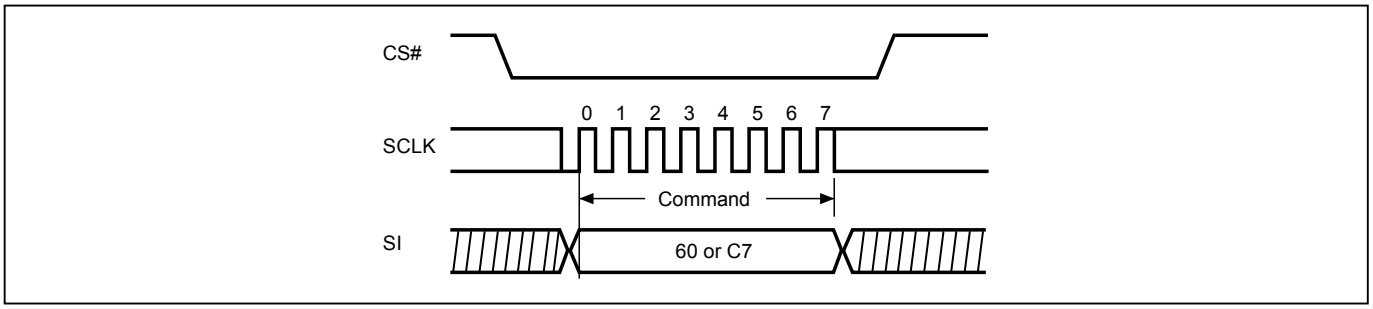


***Note:*** CE command is 60(hex) or C7(hex).

**Figure 24. Deep Power-down (DP) Sequence (Command B9)**

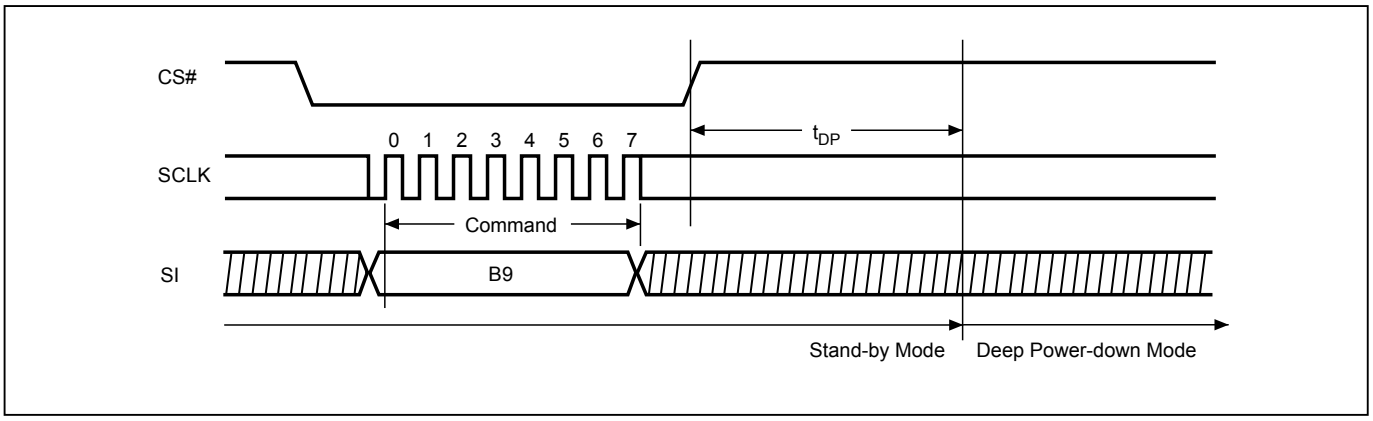


**Figure 25. RDP and Read Electronic Signature (RES) Sequence (Command AB)**

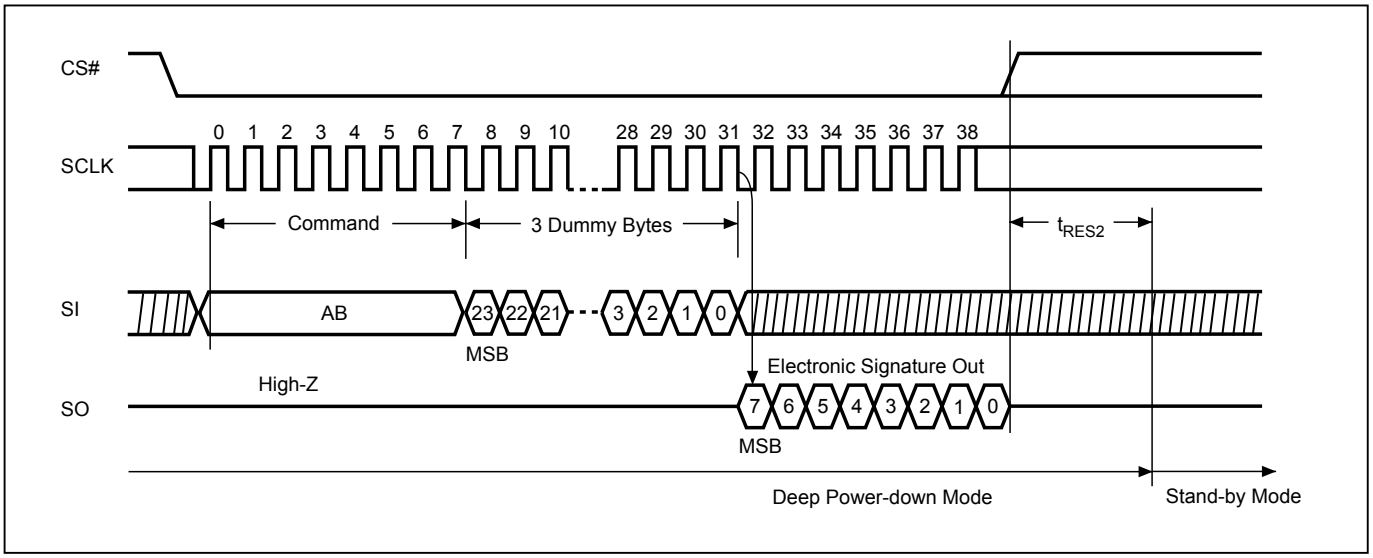

**Figure 26. Release from Deep Power-down (RDP) Sequence (Command AB)**

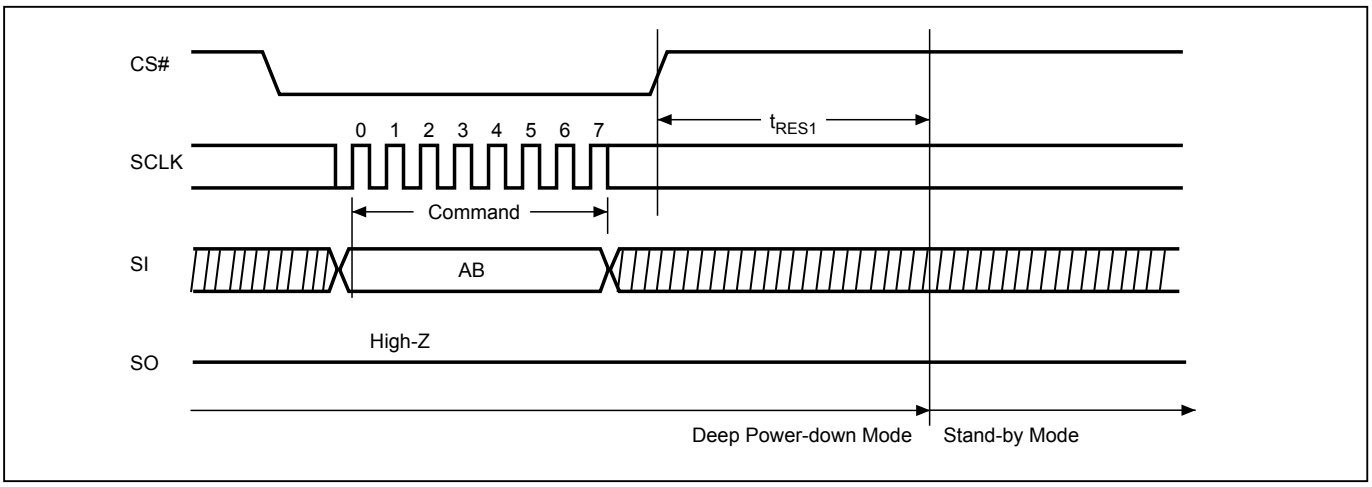


**Figure 27. Read Electronic Manufacturer & Device ID (REMS) Sequence (Command 90 or EF or DF)**

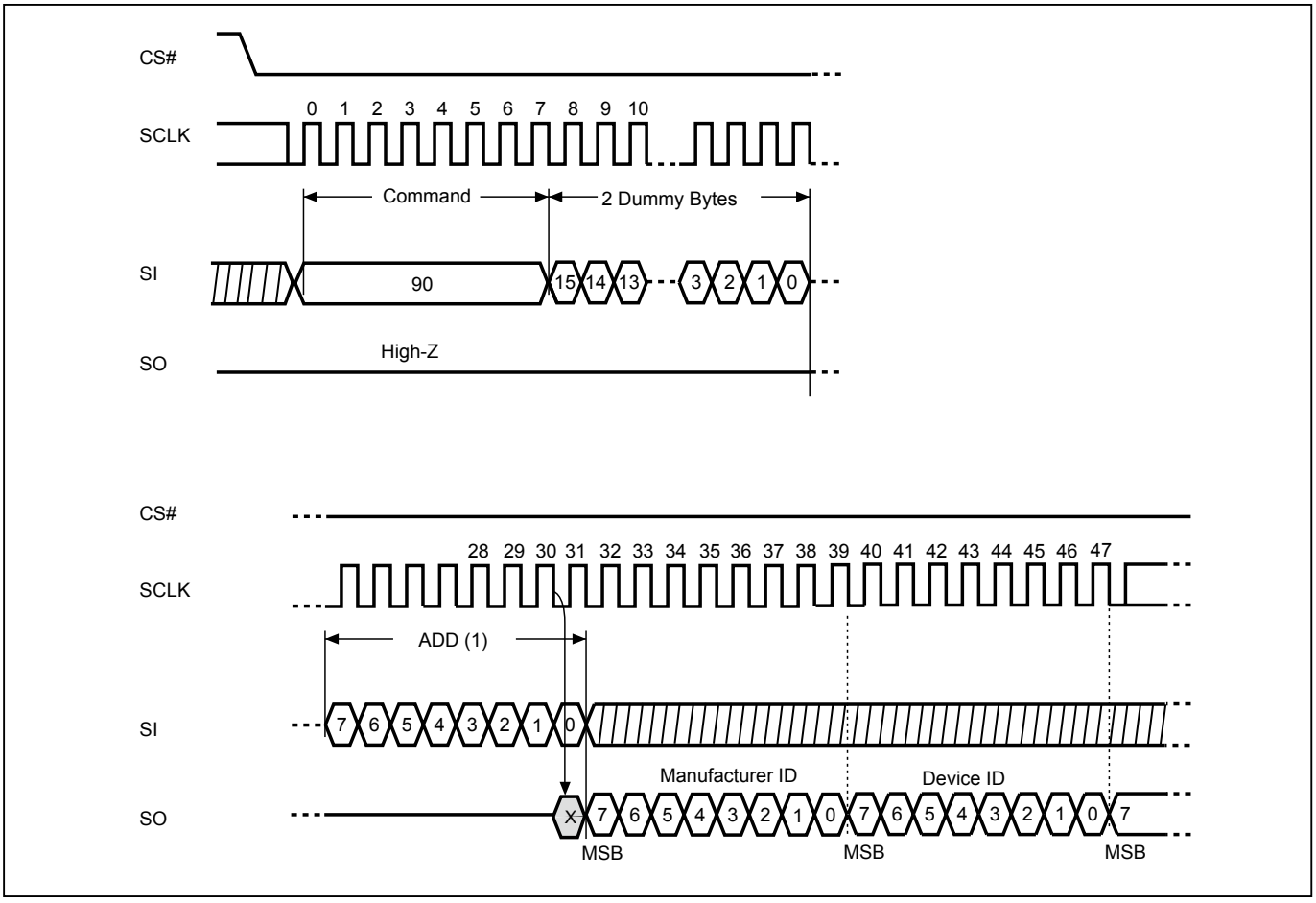


***Notes:***

(1) ADD=00H will output the manufacturer's ID first and ADD=01H will output device ID first.

(2) Instruction is either 90(hex) or EF(hex) or DF(hex).

**Figure 28. Power-up Timing**

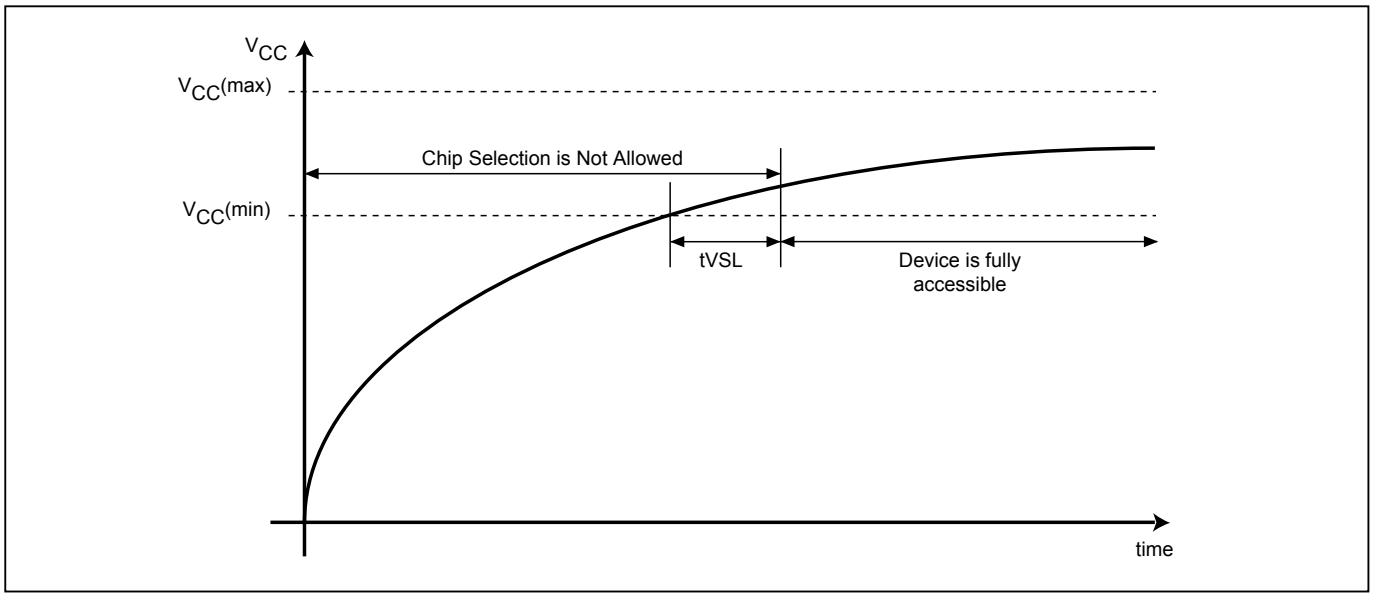


***Note:*** VCC (max.) is 3.6V and VCC (min.) is 2.7V.

**Table 11. Power-Up Timing**

| Symbol | Parameter | Min. | Max. | Unit |
|---|---|---|---|---|
| tVSL*(1)* | VCC(min) to CS# low | 200 | | us |

***Note:*** 1. The parameter is characterized only.

### Initial Delivery State

The device is delivered with the memory array erased: all bits are set to 1 (each byte contains FFh). The Status Register contains 00h (all Status Register bits are 0).

## OPERATING CONDITIONS

### At Device Power-Up and Power-Down

AC timing illustrated in *Figure 29* and *Figure 30* are for the supply voltages and the control signals at device power-up and power-down. If the timing in the figures is ignored, the device will not operate correctly.

During power-up and power-down, CS# needs to follow the voltage applied on VCC to keep the device not to be selected. The CS# can be driven low when VCC reach Vcc(min.) and wait a period of tVSL.

**Figure 29. AC Timing at Device Power-Up**

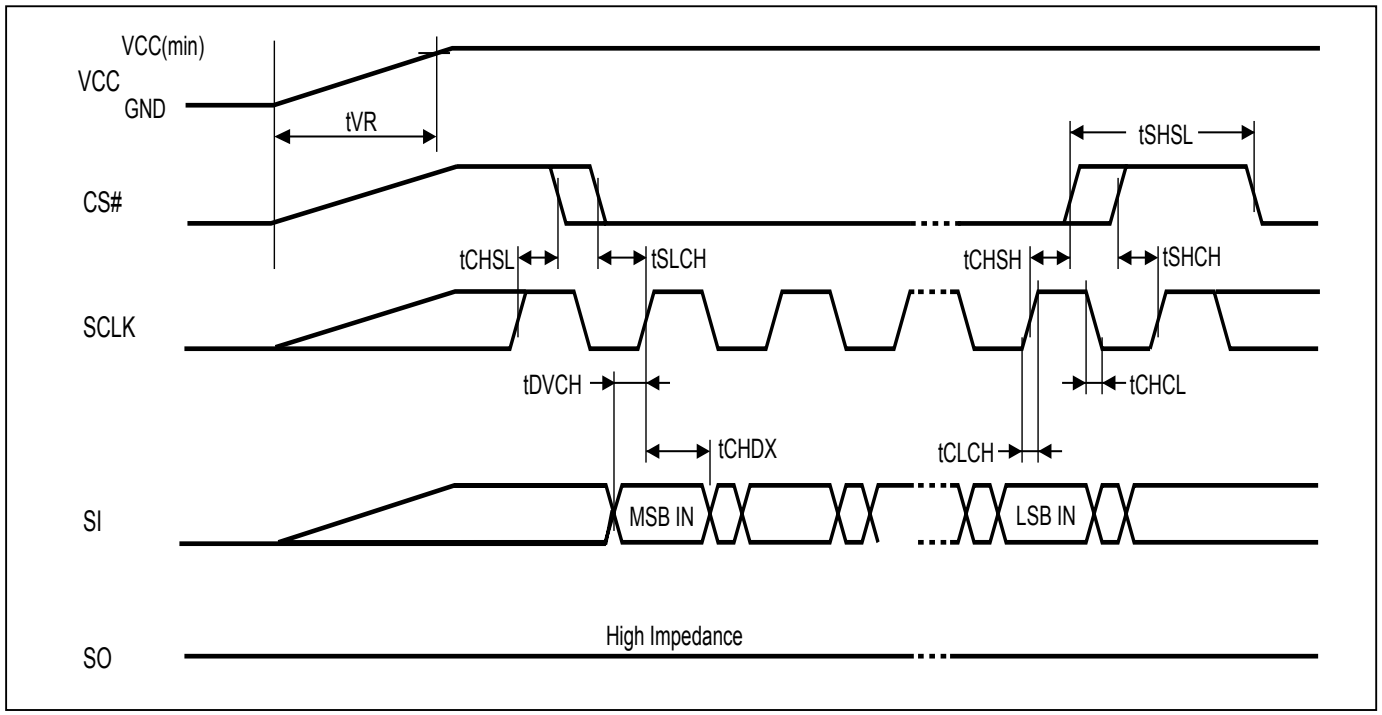


| Symbol | Parameter | Notes | Min. | Max. | Unit |
|---|---|---|---|---|---|
| tVR | VCC Rise Time | 1 | 5 | 500000 | us/V |

***Notes:***
1. The value is guaranteed by characterization, not 100% tested in production.
2. For AC spec tCHSL, tSLCH, tDVCH, tCHDX, tSHSL, tCHSH, tSHCH, tCHCL, tCLCH in the figure, please refer to "AC CHARACTERISTICS" table.

**Figure 30. Power-Down Sequence**

During power-down, CS# needs to follow the voltage drop on VCC to avoid mis-operation.

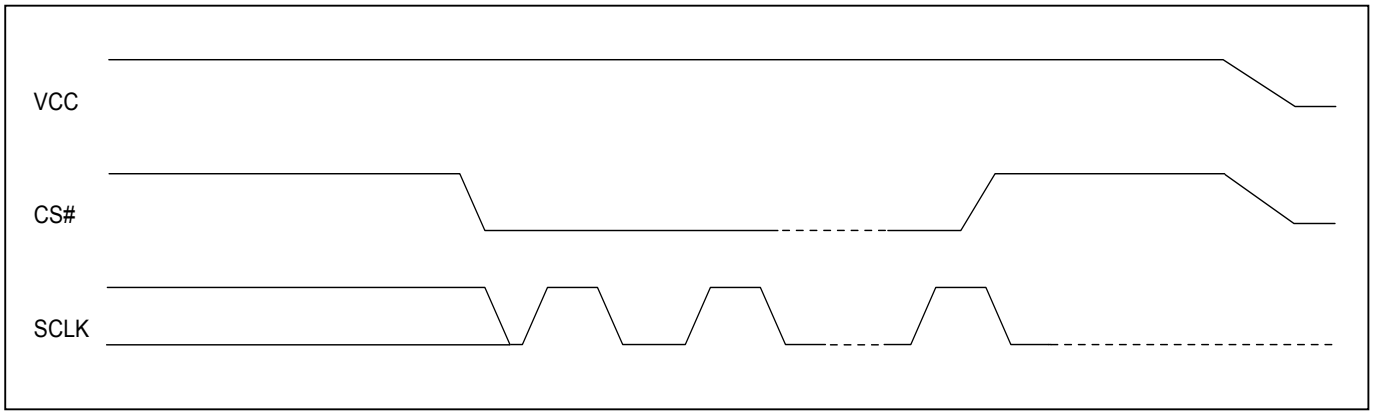

## ERASE AND PROGRAMMING PERFORMANCE

| PARAMETER | Min. | TYP. *(1)* | Max. *(2)* | UNIT |
|---|---|---|---|---|
| Write Status Register Cycle Time | | 40 | 100 | ms |
| Sector Erase Cycle Time | | 40 | 200 | ms |
| Block Erase Cycle Time | | 0.4 | 2 | s |
| Chip Erase Cycle Time | | 5 | 20 | s |
| Byte Program Time (via page program command) | | 9 | 50 | us |
| Page Program Cycle Time | | 0.6 | 3 | ms |
| Erase/Program Cycle | | 100,000 | | cycles |

***Notes:***
1. Typical program and erase time assumes the following conditions: 25°C, 3.3V, and checker board pattern.
2. Under worst conditions of 85°C and 2.7V.
3. System-level overhead is the time required to execute the first-bus-cycle sequence for the programming command.

## DATA RETENTION

| PARAMETER | Condition | Min. | Max. | UNIT |
|---|---|---|---|---|
| Data retention | 55°C | 20 | | years |

## LATCH-UP CHARACTERISTICS

| | MIN. | MAX. |
|---|---|---|
| Input Voltage with respect to GND on all power pins, SI, CS# | -1.0V | 2 VCCmax |
| Input Voltage with respect to GND on SO | -1.0V | VCC + 1.0V |
| Current | -100mA | +100mA |
| Includes all pins except VCC. Test conditions: VCC = 3.0V, one pin at a time. | | |

## ORDERING INFORMATION

| PART NO. | CLOCK (MHz) | TEMPERATURE | PACKAGE | Remark |
|---|---|---|---|---|
| MX25L1633EZNI-10G | 104 | -40°C~85°C | 8-WSON (6x5mm) | RoHS Compliant |
| MX25L1633EZUI-10G | 104 | -40°C~85°C | 8-USON (4x4mm) | RoHS Compliant |
| MX25L1633EM2I-10G | 104 | -40°C~85°C | 8-SOP (200mil) | RoHS Compliant |

## PART NAME DESCRIPTION

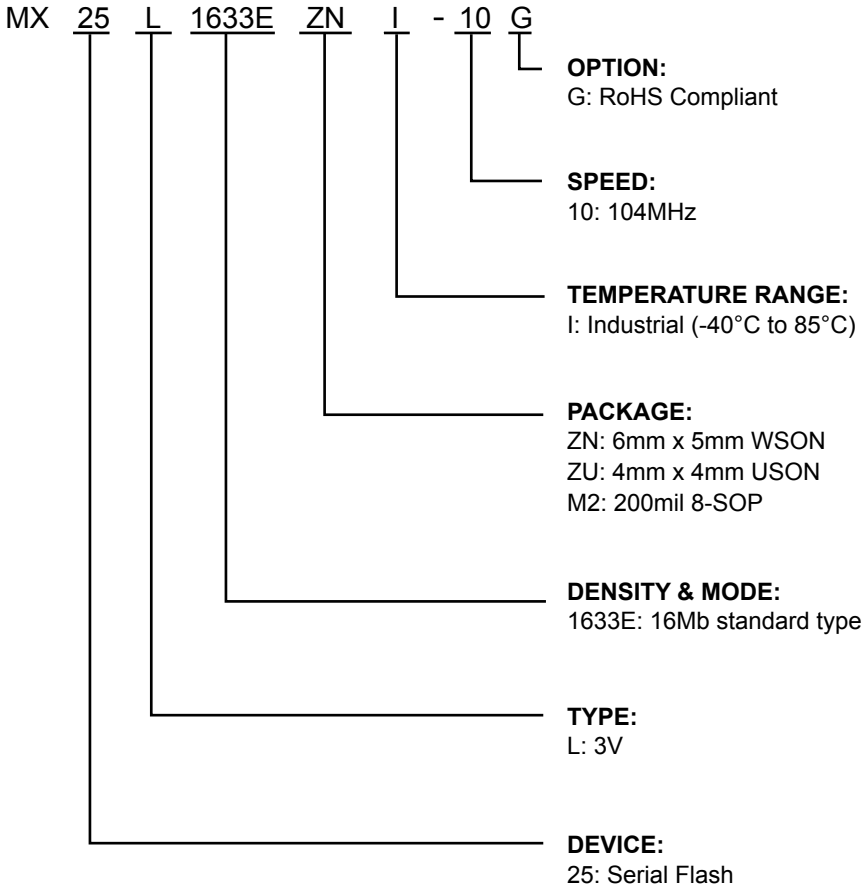

## PACKAGE INFORMATION

**Doc. Title: Package Outline for WSON 8L (6x5x0.8MM, LEAD PITCH 1.27MM)**

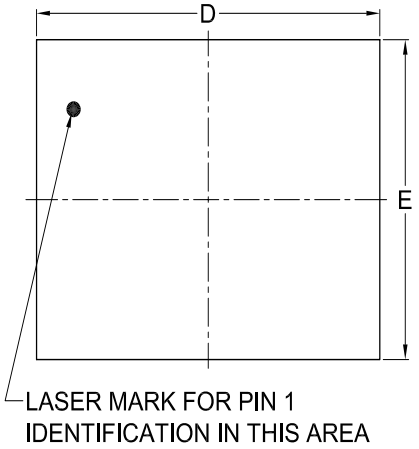


TOP VIEW

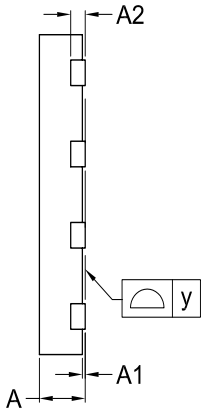


SIDE VIEW

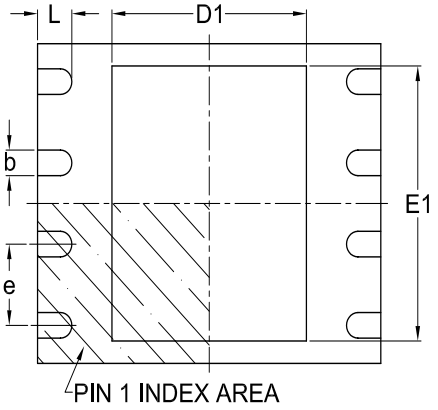


BOTTOM VIEW

Note:

This package has an exposed metal pad underneath the package. It is recommended to leave the metal pad floating or to connect it to the same ground as the GND pin of the package. Do not connect the metal pad to any other voltage or signal line on the PCB. Avoid placing vias or traces underneath the metal pad. Connection of this metal pad to any other voltage or signal line can result in shorts and/or electrical malfunction of the device.

Dimensions (inch dimensions are derived from the original mm dimensions)

| SYMBOL / UNIT | | A | A1 | A2 | b | D | D1 | E | E1 | L | e | y |
|---|---|---|---|---|---|---|---|---|---|---|---|---|
| mm | Min. | 0.70 | --- | --- | 0.35 | 5.90 | 3.30 | 4.90 | 3.90 | 0.50 | --- | 0.00 |
| | Nom. | --- | --- | 0.20 | 0.40 | 6.00 | 3.40 | 5.00 | 4.00 | 0.60 | 1.27 | --- |
| | Max. | 0.80 | 0.05 | --- | 0.48 | 6.10 | 3.50 | 5.10 | 4.10 | 0.75 | --- | 0.08 |
| Inch | Min. | 0.028 | --- | --- | 0.014 | 0.232 | 0.129 | 0.193 | 0.154 | 0.020 | --- | 0.00 |
| | Nom. | --- | --- | 0.008 | 0.016 | 0.236 | 0.134 | 0.197 | 0.157 | 0.024 | 0.05 | --- |
| | Max. | 0.032 | 0.002 | --- | 0.019 | 0.240 | 0.138 | 0.201 | 0.161 | 0.030 | --- | 0.003 |

| Dwg. No. | Revision | Reference | | | |
|---|---|---|---|---|---|
| | | JEDEC | EIAJ | | |
| 6110-3401 | 6 | MO-220 | | | |

**Doc. Title: Package Outline for USON 8L (4x4x0.6MM, LEAD PITCH 0.8MM)**

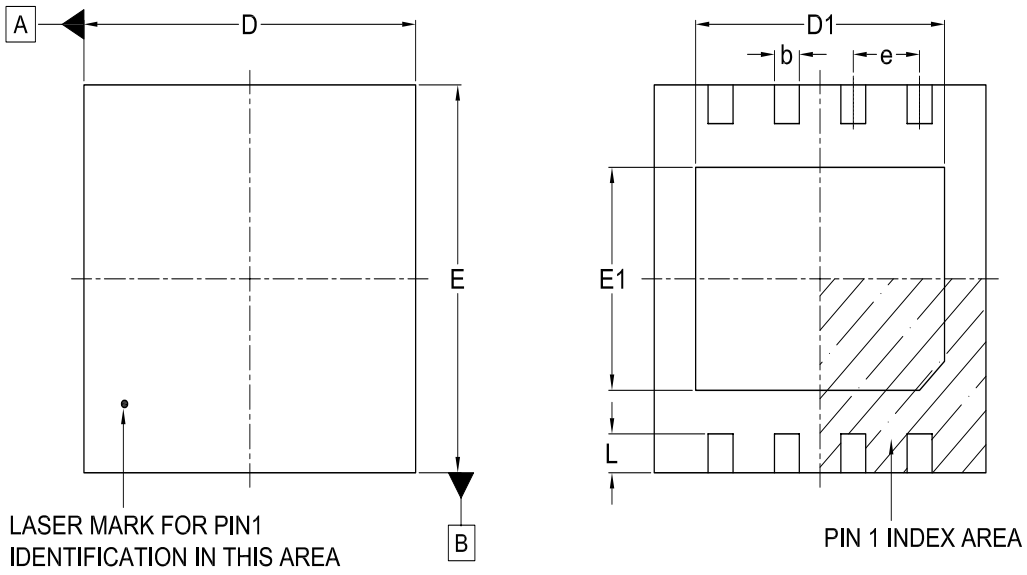


TOP VIEW

BOTTOM VIEW

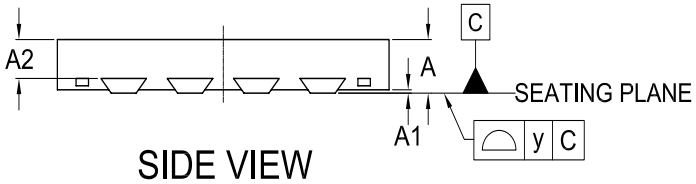


SIDE VIEW

Note:

This package has an exposed metal pad underneath the package. It is recommended to leave the metal pad floating or to connect it to the same ground as the GND pin of the package. Do not connect the metal pad to any other voltage or signal line on the PCB. Avoid placing vias or traces underneath the metal pad. Connection of this metal pad to any other voltage or signal line can result in shorts and/or electrical malfunction of the device.

Dimensions (inch dimensions are derived from the original mm dimensions)

| SYMBOL / UNIT | | A | A1 | A2 | b | D | D1 | E | E1 | L | e | y |
|---|---|---|---|---|---|---|---|---|---|---|---|---|
| mm | Min. | 0.50 | --- | --- | 0.25 | 3.90 | 2.90 | 3.90 | 2.20 | 0.35 | --- | 0.00 |
| | Nom. | 0.55 | 0.04 | 0.40 | 0.30 | 4.00 | 3.00 | 4.00 | 2.30 | 0.40 | 0.80 | --- |
| | Max. | 0.60 | 0.05 | 0.43 | 0.35 | 4.10 | 3.10 | 4.10 | 2.40 | 0.45 | --- | 0.08 |
| Inch | Min. | 0.020 | --- | --- | 0.010 | 0.154 | 0.114 | 0.154 | 0.087 | 0.014 | --- | 0.00 |
| | Nom. | 0.022 | 0.002 | 0.016 | 0.011 | 0.157 | 0.118 | 0.157 | 0.091 | 0.016 | 0.031 | --- |
| | Max. | 0.024 | 0.002 | 0.017 | 0.014 | 0.161 | 0.122 | 0.161 | 0.094 | 0.018 | --- | 0.003 |

| Dwg. No. | Revision | Reference | | | |
|---|---|---|---|---|---|
| | | JEDEC | EIAJ | | |
| 6110-3601 | 5 | MO-252 | | | |

Doc. Title: Package Outline for SOP 8L 200MIL (official name - 209MIL)

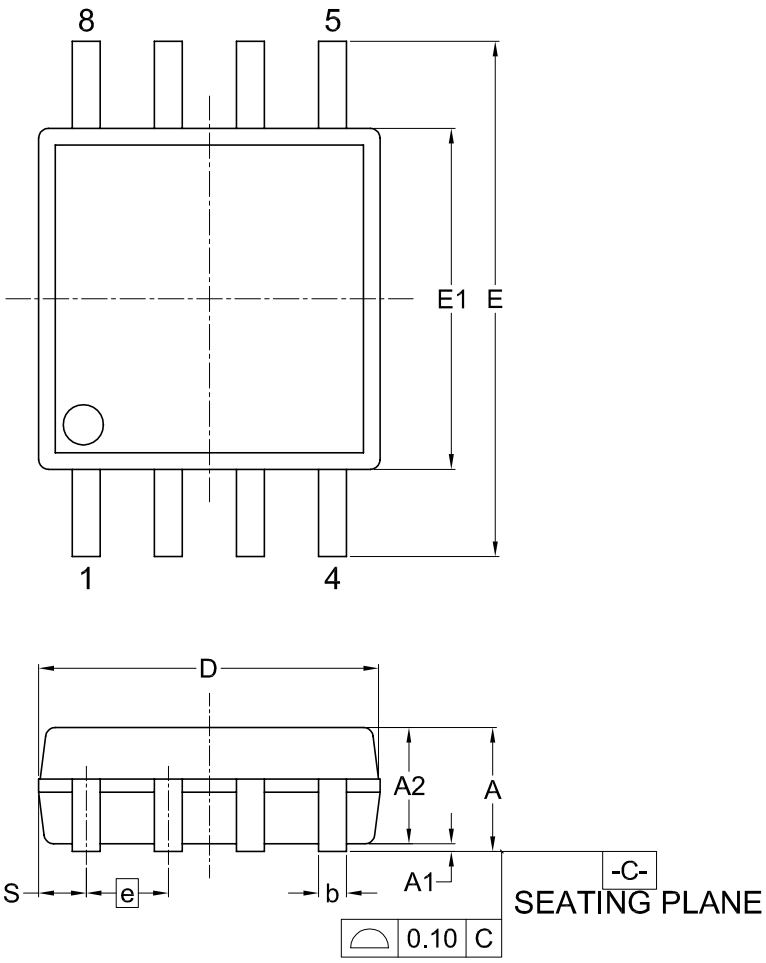


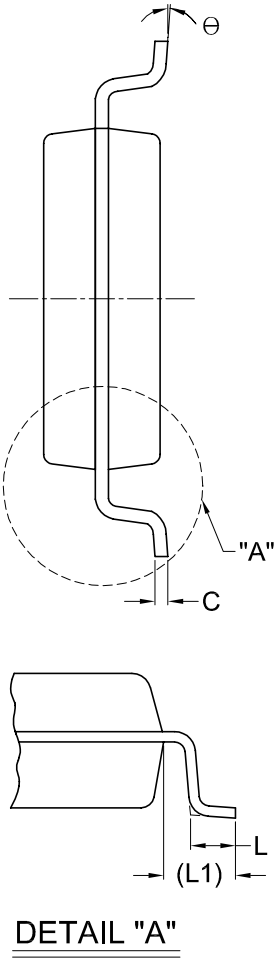


Dimensions (inch dimensions are derived from the original mm dimensions)

| SYMBOL / UNIT | | A | A1 | A2 | b | C | D | E | E1 | e | L | L1 | S | θ |
|---|---|---|---|---|---|---|---|---|---|---|---|---|---|---|
| mm | Min. | --- | 0.05 | 1.70 | 0.36 | 0.19 | 5.13 | 7.70 | 5.18 | --- | 0.50 | 1.21 | 0.62 | 0 |
| | Nom. | --- | 0.15 | 1.80 | 0.41 | 0.20 | 5.23 | 7.90 | 5.28 | 1.27 | 0.65 | 1.31 | 0.74 | 5 |
| | Max. | 2.16 | 0.20 | 1.91 | 0.51 | 0.25 | 5.33 | 8.10 | 5.38 | --- | 0.80 | 1.41 | 0.88 | 8 |
| Inch | Min. | --- | 0.002 | 0.067 | 0.014 | 0.007 | 0.202 | 0.303 | 0.204 | --- | 0.020 | 0.048 | 0.024 | 0 |
| | Nom. | --- | 0.006 | 0.071 | 0.016 | 0.008 | 0.206 | 0.311 | 0.208 | 0.050 | 0.026 | 0.052 | 0.029 | 5 |
| | Max. | 0.085 | 0.008 | 0.075 | 0.020 | 0.010 | 0.210 | 0.319 | 0.212 | --- | 0.031 | 0.056 | 0.035 | 8 |

| Dwg. No. | Revision | Reference | | | |
|---|---|---|---|---|---|
| | | JEDEC | EIAJ | | |
| 6110-1406 | 3 | | | | |

## REVISION HISTORY

| Revision No. | Description | Page | Date |
|---|---|---|---|
| 0.01 | 1. Added 4 x I/O=80MHz @VCC=3.0V~3.6V | P5, 27, 28 | JUN/21/2010 |
| | 2. Revised Storage Temperature | P25 | |
| 0.02 | 1. Changed title from "Advanced Information" to "Preliminary" | P5 | AUG/02/2010 |
| 1.0 | 1. Changed Clock Rate<br>2 x I/O Read = From 75 MHz to 85MHz<br>4 x I/O Read = From 75 MHz to 85MHz | P5, 27, 28 | AUG/31/2010 |
| | 2. Removed 16 pin SOP | P6, 8, 43, 44 | |
| | 3. Removed the title "Preliminary" | P5 | |
| 1.1 | 1. Changed tVR(min.) from 20us/V to 5us/V | P40 | NOV/18/2010 |
| | 2. Modified description for RoHS compliance | P6,43,44 | |
| 1.2 | 1. Updated 4PP program frequency | P21,28 | APR/26/2011 |
| 1.3 | 1. Revised tCLQV spec from 10ns@30pF loading to 9ns@30pF loading. | P28 | JUN/14/2011 |
| 1.4 | 1. Modified WEL bit description | P16 | AUG/08/2012 |
| | 2. Modified Test Conditions of ILO | P27 | |
| 1.5 | 1. Added 8-USON 4x4mm package solution | P6,8,43,44, P46 | NOV/08/2012 |
| 1.6 | 1. Modified tCLQX spec. in AC Characteristics Table | P28 | DEC/12/2012 |
| 1.7 | 1. Removed Advanced Information from MX25L1633EZUI-10G | P43 | JAN/09/2013 |
| 1.8 | 1. Updated parameters for DC Characteristics. | P5,27 | NOV/08/2013 |
| | 2. Updated Erase and Programming Performance. | P5,27~28,42 | |
| | 3. Updated package information | P45~46 | |
| | 4. Updated feature descriptions | P5 | |

Except for customized products which has been expressly identified in the applicable agreement, Macronix's products are designed, developed, and/or manufactured for ordinary business, industrial, personal, and/or household applications only, and not for use in any applications which may, directly or indirectly, cause death, personal injury, or severe property damages. In the event Macronix products are used in contradicted to their target usage above, the buyer shall take any and all actions to ensure said Macronix's product qualified for its actual use in accordance with the applicable laws and regulations; and Macronix as well as it's suppliers and/or distributors shall be released from any and all liability arisen therefrom.

Copyright© Macronix International Co., Ltd. 2010~2013. All rights reserved, including the trademarks and tradename thereof, such as Macronix, MXIC, MXIC Logo, MX Logo, Integrated Solutions Provider, NBit, Nbit, NBiit, Macronix NBit, eLiteFlash, HybridNVM, HybridFlash, XtraROM, Phines, KH Logo, BE-SONOS, KSMC, Kingtech, MXSMIO, Macronix vEE, Macronix MAP, Rich Audio, Rich Book, Rich TV, and FitCAM. The names and brands of third party referred thereto (if any) are for identification purposes only.

For the contact and order information, please visit Macronix's Web site at: http://www.macronix.com