Rating	3 A 125/250VAC	Mechanical Life	500,000 cycles
Contact Resistance	500mΩ Max	Electrical Life	
Insulation Resistance	>100MΩ DC500V	Ambient Temper. Used	-25℃ to +105℃
Withstand Voltage	AC1500V 1min.	Ambient Humidity Used	≤85% at +40℃
Soldering Temper.	235±5℃ 5s	Operating Force	220- 350gf max

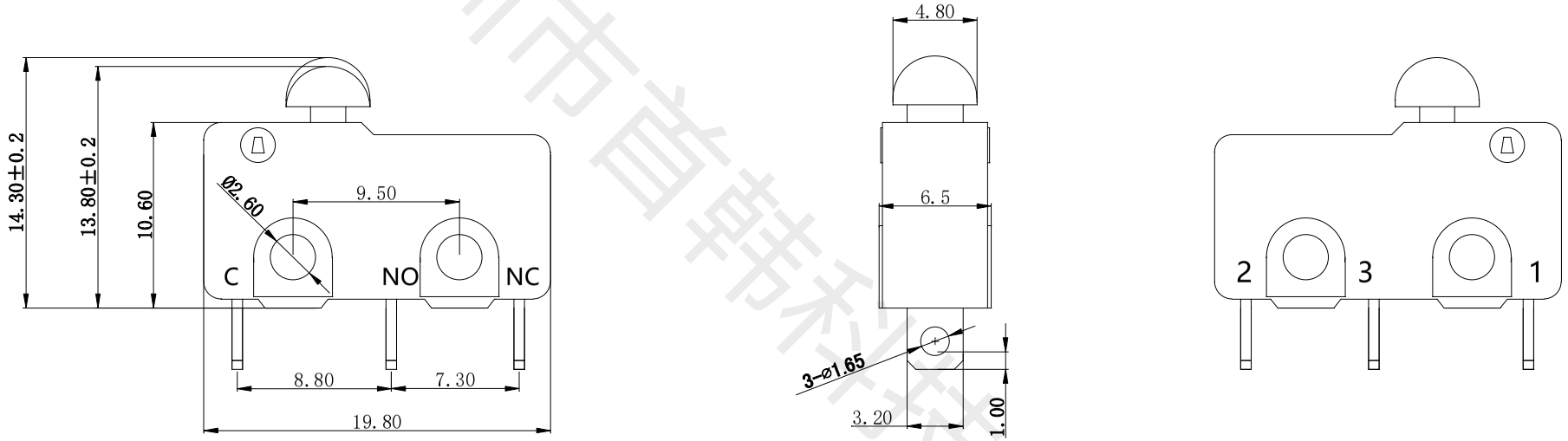

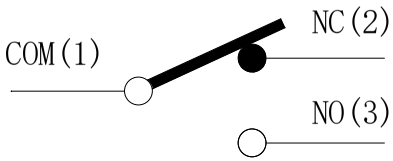

电路图

序号	零件名称	数量	材质	备注
9	触点	3	C2680	
8	弹簧	1	SUS304	
7	弹片	1	C5191/紫铜点	
6	NO端子	1	C2680	
5	NC端子	1	C2680	
4	COM端子	1	C2680	
3	按钮	1	PBT	UL94V-0
2	下盖	1	PBT	UL94V-0
1	上盖	1	PBT	UL94V-0

制图 DRAWIN	李春风		深圳市首韩科技有限公司								
设计 DESIGN											
审核 CHECKED	钟华华		比例 SCALE	4:1	名称 TITLE	微动开关					
核准 APPROVE	罗孝金		张数 SHEET	1/1	料号 P/N NO.	3JWD-HDWB-M					
一般公差 TOLERANCE		±0.20	单位 UNIT	mm	模具编号 P/N NO.						
		±0.15									
		±0.10	角度 ANGLES	±2.0°	纸张 SIZE	A4	角法 PROJ.		工程圖 ENG DRAW		
		±0.05									

版本 REV.	ECN 编号 ECN NO.	日期 DATE	变更内容 DEFINITION	修改 DRAW	核准 APPROVE
B					

深圳市首韩科技有限公司
SHENZHEN SHOUHAN TECHNOLOGYCO.,LTD
Tel: 0755-27597601 Fax: 0755-27597491

承 认 书

SPECIFICATION FOR APPROVAL

客 户 Customer：

产品名称 Project： 微动开关

规格型号 Part No： 3JWD-HDWB-M

贵公司承认印 Approal signatures

料 号/Part No.	签 章/Signatures

日期 Date:

拟制/Drawn	李春风	
审核/Check	钟华华	
批准/Approved	罗孝金	

深圳市首韩科技有限公司 工程专用章

深圳市首韩科技有限公司

深圳市首韩科技有限公司

规　格　书
SPECIFICATIO N

1. 一般特性 General Characteristics

1.1 额定值(Rating Value)： AC 125V/250V 3A
1.2 工作温度(Work Temperature Range)： -25℃ ~ 105℃
1.3 存贮温度(Store Temperature Range)： -20℃ ~ 80℃
1.4 正常测试条件(未有特殊说明量测在以下条件进行)：
General test condition (Tests and measurements shall be made under the following standard conditions unless otherwise specified):
正常温度: 5℃~35℃　　相对湿度: 45%~85% RH　　气 压: 8,600~10,600 帕
Temperature: 5℃~35℃　　Relative humidity: 45%~85%　　Air pressure: 8,600~10,600 pa

2. 产品外观及尺寸要求 Appearance & Dimension Requirement

2.1 产品外形结构紧凑,无配合不良.
The structure of product is compact, and assembly of parts has no badness.

2.2 产品塑胶部件无严重缩水、披锋、欠注、斑点、破损或变形现象.
The plastic parts of product have no serious defects such as very serious shrink, scarcity, fleck, disrepair, transmutation, etc.

2.3 产品引脚和外壳无严重氧化、脏污、变形、毛刺或电镀不良.
Lead feet and shell have no serious defects such as oxidation, smudge, disrepair, burr, defects on plating.

2.4 开关操作顺畅,节奏感强,无明显卡塞现象。
Operating switch is unhindered, rhythmed , and there is not palpable clag.

2.5 产品结构及尺寸参见产品规格图纸。
Construction and dimensions: Refer to individual product drawing.

3. 电气特性 Electronic Characteristics

No.	项　目 Item	测试方法 Test Method	测试设备 Equipment	特性要求 Requirements
3.1	接触电阻 Contact Resistance	在低电流（≤100mA）条件下测试. Measured at low current (100mA or less).	低电阻测试仪 Low Resistance Meter	500mΩMAX
3.2	绝缘阻抗 Insulation Resistance	测试相邻引脚之间,引脚与外壳之间的绝缘阻抗. Measurement shall be made between adjacent terminals, between terminal and shell.	绝缘测试机 Insulation Resistance Tester	100MΩMIN
3.3	耐压测试 Dielectric Withstand Voltage	输入一定电压(50-60Hz,电压值AC 1500V)1分钟,漏电流为2mA,测试邻近端子间. Apply certain voltage (50-60Hz, AC 1500V) for 1 minute between adjacent contacts of the connector with 2mA leakage sensitivity.	耐压测试机 Puncture Tester	没有绝缘破坏.电弧等异常. No arcing , break down and damaging insulation.

4. 机械特性 Mechanical Characteristics

No.	项 目 Item	测试方法 Test Method	测试设备 Equipment	特性要求 Requirements
4.1	操 作 力 Operation Force	逐渐施力操作开关按键，测量开 关到达全部工作行程时所需的最 大操作力度。 Operate the keystoke of the switch and then increase press strength gradually, Measured maximum operation force while the travel of the switch is full.	测力计 Force Gauge	220gf ~350gf

5. 可靠性测试 Reliability trial

No.	项 目 Item	测试方法 Test Method	测试设备 Equipment	特性要求 Requirements
5.1	可焊性试验 Solder ability Test	端子顶部被浸入焊锡炉中，温度为 235±5℃，时间 5±1 秒. The top of the terminals shall be dipped in the solder bath at 235±5℃ for 5±1 seconds.	控温锡炉 Solder Stove	引脚至少 95%上锡. Ninety-five percent of terminals shall be dipped.
5.2	寿命试验 Operation Life	开关在寿命试验设备上以约 90 次 / 分的速度连续被操作，具体次数见规格图示。 Switch shall be operated continuously at about 90 cycles /min without load.	寿命试验机 Life Tester	寿命:500000 次 实验后: 绝缘电阻：10MΩMin 操作力：变化在±50%内开关外观及结构无损坏。 Life test:50000 cycles After test, Insulation resistance:10MΩ Min Operating force: Change should be within ±50% of specified value. No abnormalities shall be recognized in appearance and construction.
5.3	耐焊接热 Resistance to Soldering heat	端子焊接部分浸入焊炉，焊炉温度 260± 5℃，焊接时间 5±1 秒。(焊接时不可于 端子施加外力)。 Terminals shall be dipped in the solder bath at 260±5℃ for 5±1 seconds without additional force for terminals.	控温锡炉 Solder Stove	本体无变形，能满足于机械、电气性能. Appearance should be not damaged, electrical and mechanical characteristics shall be satisfied.

深圳市首韩科技有限公司

5. 可靠性测试 Reliability trial

No.	项 目 Item	测试方法 Test Method	测试设备 Equipment	特性要求 Requirements
5.4	耐高温测试 Resistance to Heat Test	放置在温度 80±2℃环境中 96 小时后， 再置于正常条件下 1 小时后测定。 The switch shall be stored at a temperature of 80±2℃ for 96 hours, Measurements shall be made after it be subjected to the standard conditions for 1 hour.	高低温试验机 High & Low Temperature Tester	外观，机械及电气性能均符合要求。 Appearance, electrical and mechanical characteristics shall be satisfied.
5.5	耐低温测试 Resistance to Cold Test	放置在温度-20±2℃环境中 96 小时后，再置于正常条件下 1 小时后测定。 The switch shall be stored at a temperature of -20±2℃ for 96 hours, Measurements shall be made after it be subjected to the standard conditions for 1 hour.	高低温试验机 High & Low Temperature Tester	外观，机械及电气性能均符合要求。 Appearance, electrical and mechanical characteristics shall be satisfied.
5.6	耐湿性测试 Resistance to Humidity Test	放置于温度 40±2℃，相对湿度为 90~96%环境中 96 小时后，再置于正常条件下 1 小时后测定(注意要擦去水滴)。 The switch shall be stored at a temperature of 40±2℃, relative humidity 90~96% for 96 hours, Measurements shall be made after it be subjected to the standard conditions for 1 hour (Wipe out water drip).	恒温恒湿箱 Temperature & Humidity Tester Chamber	外观，机械及电气性能均符合要求。 Appearance, electrical and mechanical characteristics shall be satisfied.
5.7	盐雾实验 Salt Mist Test	试件在下述实验后测量： 1．温度： 35±5°C 2．盐溶液浓度：5±1%（质量百分比）， 3．试验时间： 24 小时， 4．试验后，将盐沉积物用水冲掉。 The switch shall be checked after following test: 1. Temperature: 35±5°C 2. Salt solution: 5±1%(Solids by mass) 3. Duration: 24 hours, 4. After immersing, salt deposit shall be removed by running water.	盐雾试验机 Salt Spray Tester	在金属件上没有严重腐蚀斑点。 No remarkable corrosion shall be recognized in metal parts.

深圳市首韩科技有限公司