DATASHEET

5 PIN DIP RANDOM-PHASE TRIAC DRIVER PHOTOCOUPLER EL301X(P5), EL302X(P5), EL305X(P5) Series

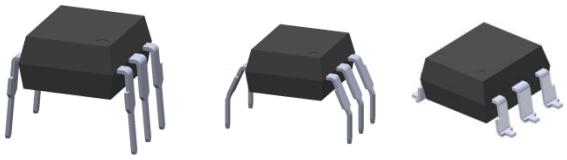

Schematic

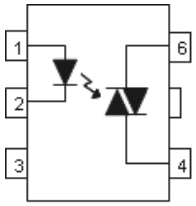

Pin Configuration
1. Anode
2. Cathode
3. No Connection
4. Terminal
5. Pin Cut
6. Terminal

Features:

- Peak breakdown voltage
  - 250V: EL301X(P5)
  - 400V: EL302X(P5)
  - 600V: EL305X(P5)
- High isolation voltage between input and output (Viso=5000 V rms)
- Compact dual-in-line package
- Compliance with EU REACH
- The product itself will remain within RoHS compliant version
- UL and cUL approved(No. E214129)
- VDE approved (No.132249)
- SEMKO approved
- NEMKO approved
- DEMKO approved
- FIMKO approved
- CQC approved

Description

The EL301X(P5), EL302X(P5) and EL305X(P5) series of devices each consist of a GaAs infrared emitting diode optically coupled to a monolithic silicon random phase photo Triac.

They are designed for interfacing between electronic controls and power triacs to control resistive and inductive loads for 115 to 240 VAC operations

Applications

- Solenoid/valve controls
- Lamp ballasts, Incandescent lamp dimmers
- Static AC power switch
- Interfacing microprocessors to 115 to 240Vac peripherals
- Temperature controls
- Motor controls

Copyright © 2010, Everlight All Rights Reserved. Release Date: October10 2018. Issue No: DPC-0000075 Rev.9

Ver.:9 Release Date:10/15/2018 狀態:Approved(正式發行)

Absolute Maximum Ratings (Ta=25℃)

Parameter			Symbol	Rating	Unit
Input	Forward current		I_F	60	mA
	Reverse voltage		V_R	6	V
	Power Dissipation		P_D	100	mW
	No derating required up to T_a = 85°C			3.8	mW /°C
Output	Off-state Output Terminal Voltage	EL301X	V_{DRM}	250	V
		EL302X		400	
		EL305X		600	
	Peak Repetitive Surge Current		I_{TSM}	1	A
	Power dissipation		P_C	300	mW
	Derating factor (above T_a = 85°C)			7.4	mW/℃
Total power dissipation			P_{TOT}	330	mW
Isolation voltage*1			V_{ISO}	5000	Vrms
Operating temperature			T_{OPR}	-55 to 100	℃
Storage temperature			T_{STG}	-55 to 125	℃
Soldering Temperature*2			T_{SOL}	260	℃

Notes:
*1 AC for 1 minute, R.H.= 40 ~ 60% R.H. In this test, pins 1, 2 & 3 are shorted together, and pins 4, 6 are shorted together.
*2 For 10 seconds

Copyright © 2010, Everlight All Rights Reserved. Release Date: October10 2018. Issue No: DPC-0000075 Rev.9

Ver.:9 Release Date:10/15/2018 承認:Approved(正式發行)

Electro-Optical Characteristics (Ta=25℃ unless specified otherwise)

Input

Parameter	Symbol	Min.	Typ.*1	Max.	Unit	Condition
Forward Voltage	V_F	-	1.18	1.5	V	I_F = 10mA
Reverse Leakage current	I_R	-	-	10	μA	V_R = 6V

Output

Parameter		Symbol	Min.	Typ.*1	Max.	Unit	Condition
Peak Blocking Current		I_{DRM}	-	-	100	nA	V_{DRM} = Rated V_{DRM}, I_F = 0mA*2
Peak On-state Voltage		V_{TM}	-	-	2.5	V	I_{TM}=100mA peak, I_F=Rated I_{FT}
Critical Rate of Rise off-state Voltage	EL301X EL302X	dv/dt	-	100	-	V/μs	V_{PEAK} =Rated V_{DRM}, I_F=0 (Fig. 8)*3
	EL305X		1000	-	-		V_{PEAK} =400V, I_F=0 (Fig. 8)

* Notes:
*1.Typical values at T_a = 25°C
*2. Test voltage must be applied within dv/dt rating.
*3. This is static dv/dt. See Figure 8 for test circuit. Commutating dv/dt is a function of the load-driving thyristor(s) only.

Copyright © 2010, Everlight All Rights Reserved. Release Date: October10 2018. Issue No: DPC-0000075 Rev.9

Ver.:9 Release Date:10/15/2018 狀態:Approved(正式發行)

Transfer Characteristics

Parameter		Symbol	Min.	Typ.*1	Max.	Unit	Condition
LED Trigger Current	EL3010 EL3021 EL3051	I_{FT}	-	-	15	mA	Main terminal Voltage=3V*4
	EL3011 EL3022 EL3052		-	-	10		
	EL3012 EL3023 EL3053		-	-	5		
Holding Current		I_H	-	250	-	μA	

Notes:

*4. All devices are guaranteed to trigger at an I_F value less than or equal to max I_{FT}. Therefore, recommended operating I_F lies between max I_{FT} (15 mA for EL3010/EL3021/EL3051,10 mA for EL3011/EL3022/EL3052, 5 mA for EL3012/EL3023/EL3053) and absolute maximum I_F (60 mA).

Copyright © 2010, Everlight All Rights Reserved. Release Date: October10 2018. Issue No: DPC-0000075 Rev.9

Ver.:9 Release Date:10/15/2018 狀態:Approved(正式發行)

Typical Electro-Optical Characteristics Curves

Figure 1. Forward Current vs Forward Voltage

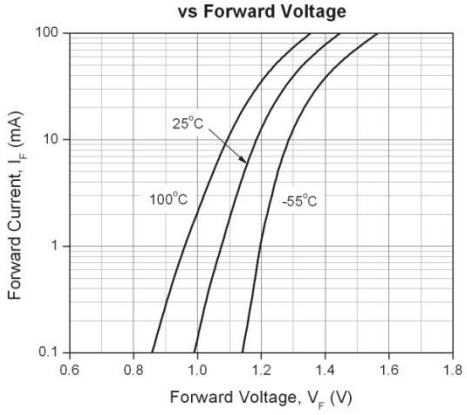

Figure 2. On-State Characteristics

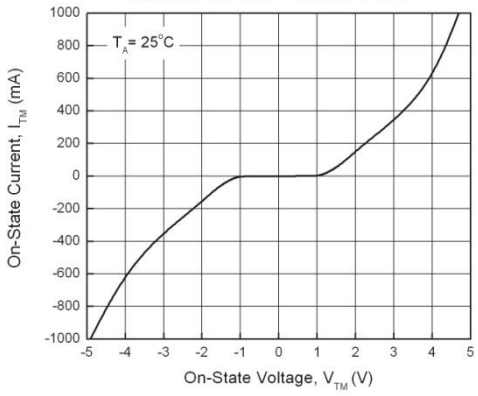

Figure 3. Holding Current vs. Ambient Temperature

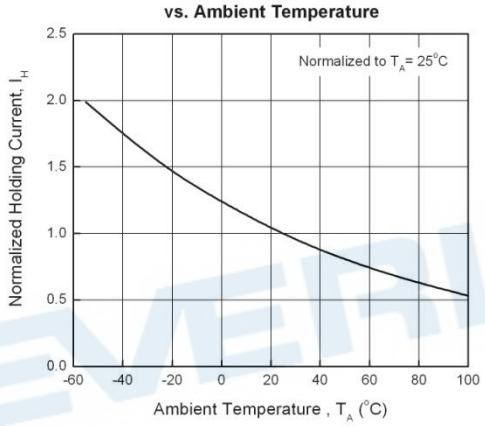

Figure 4. LED Current Required to Trigger vs. LED Pulse Width

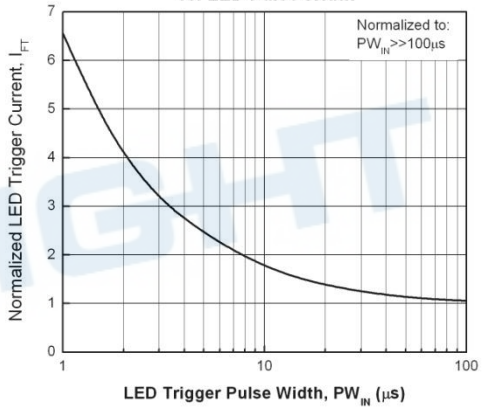

Figure 5. Leakage Current vs. Ambient Temperature

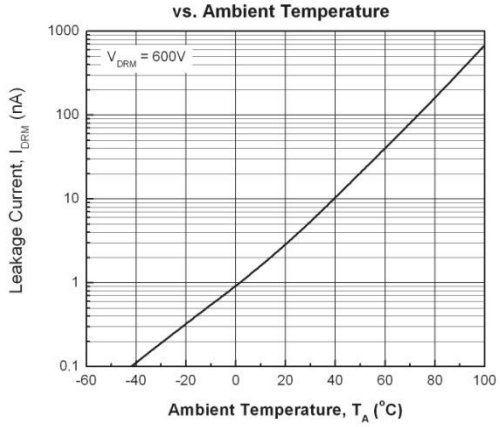

Figure 6. LED Trigger Current vs. Ambient Temperature

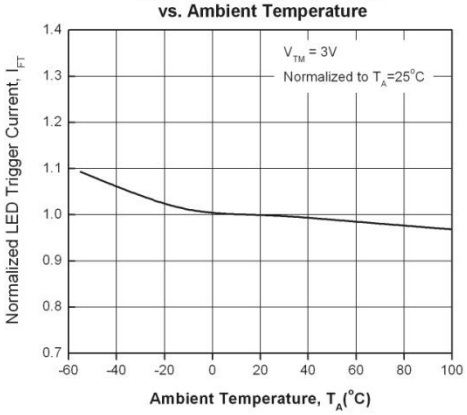

Copyright © 2010, Everlight All Rights Reserved. Release Date: October10 2018. Issue No: DPC-0000075 Rev.9
Ver.:9 Release Date:10/15/2018 版憑:Approved(正式發行)

Figure 7. Off-State Output Terminal Voltage vs. Ambient Temperature

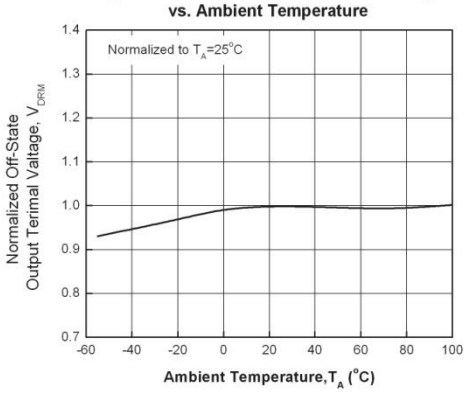

EVERLIGHT

Copyright © 2010, Everlight All Rights Reserved. Release Date: October10 2018. Issue No: DPC-0000075 Rev.9
Ver.:9 Release Date:10/15/2018 狀態:Approved(正式發行)

Figure 8. Static dv/dt Test Circuit & Waveform

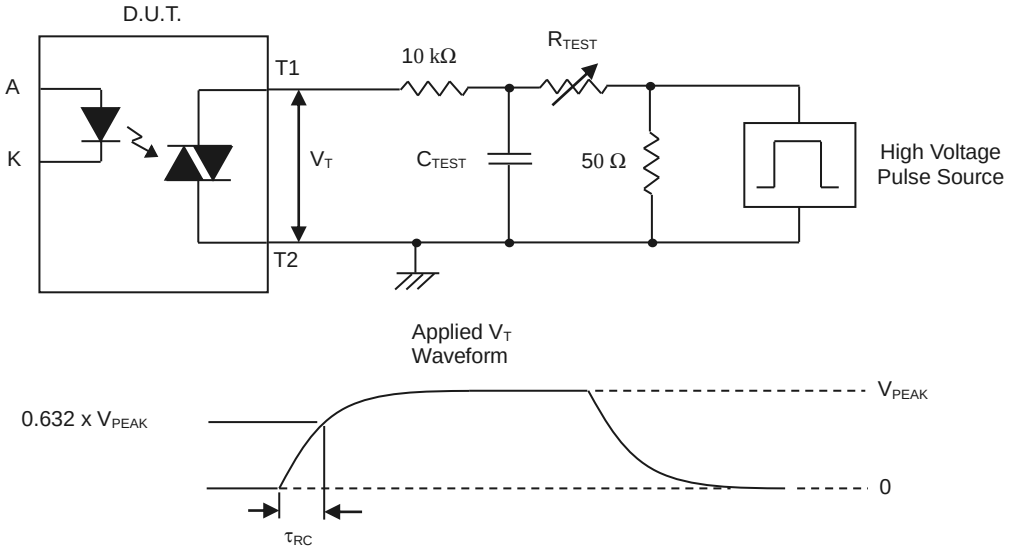

Measurement Method

The high voltage pulse is set to the required V_{PEAK} value and applied to the D.U.T. output side through the RC circuit above. LED current is not applied. The waveform V_T is monitored using a x100 scope probe. By varying R_{TEST}, the dv/dt (slope) is increased, until the D.U.T. is observed to trigger (waveform collapses). The dv/dt is then decreased until the D.U.T. stops triggering. At this point, τ_{RC} is recorded and the dv/dt calculated.

$$dv/dt = \frac{0.632 \times V_{PEAK}}{\tau_{RC}}$$

For example, V_{PEAK} = 400V for EL302X series. The dv/dt value is calculated as follows:

$$dv/dt = \frac{0.632 \times 400}{\tau_{RC}} = \frac{252.8}{\tau_{RC}}$$

Copyright © 2010, Everlight All Rights Reserved. Release Date: October10 2018. Issue No: DPC-0000075 Rev.9
Ver.:9 Release Date:10/15/2018 狀態:Approved(正式發行)

Order Information

Part Number

EL301XY(Z)(P5)-V
or **EL302XY(Z)(P5)-V**
or **EL305XY(Z)(P5)-V**

Notes

X = Part No. for EL301x (0, 1 or 2)
X = Part No. for EL302x, EL305x (1, 2 or 3)
Y = Lead form option (S, S1, M or none)
Z = Tape and reel option (TA, TB or none)
P5 = 5 pins type
V = VDE safety approved (optional)

Option	Description	Packing quantity
None	Standard DIP-6	65 units per tube
M	Wide lead bend (0.4 inch spacing)	65 units per tube
S (TA)	Surface mount lead form + TA tape & reel option	1000 units per reel
S (TB)	Surface mount lead form + TB tape & reel option	1000 units per reel
S1 (TA)	Surface mount lead form (low profile) + TA tape & reel option	1000 units per reel
S1 (TB)	Surface mount lead form (low profile) + TB tape & reel option	1000 units per reel

Copyright © 2010, Everlight All Rights Reserved. Release Date: October10 2018. Issue No: DPC-0000075 Rev.9

Ver.:9 Release Date:10/15/2018 狀態:Approved(正式發行)

Package Dimension (Dimensions in mm)

Standard DIP Type

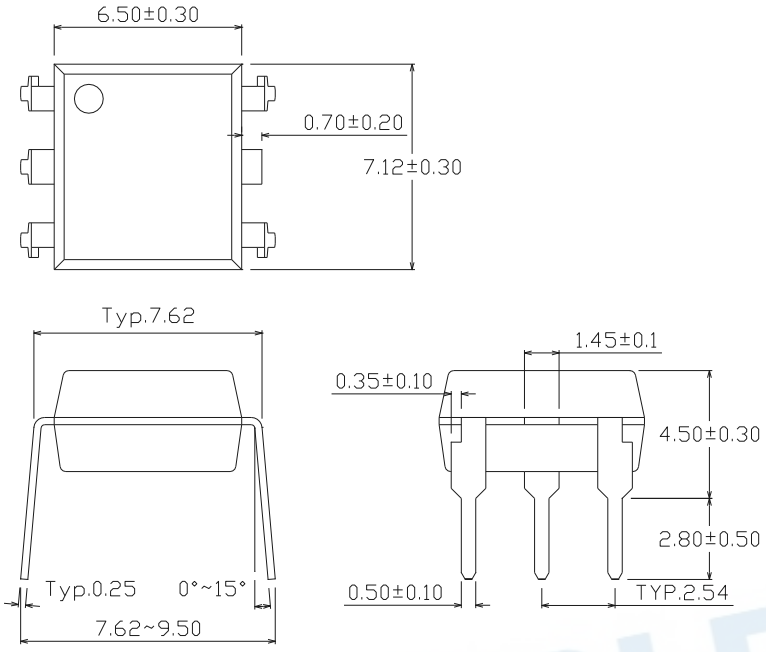

Option M Type

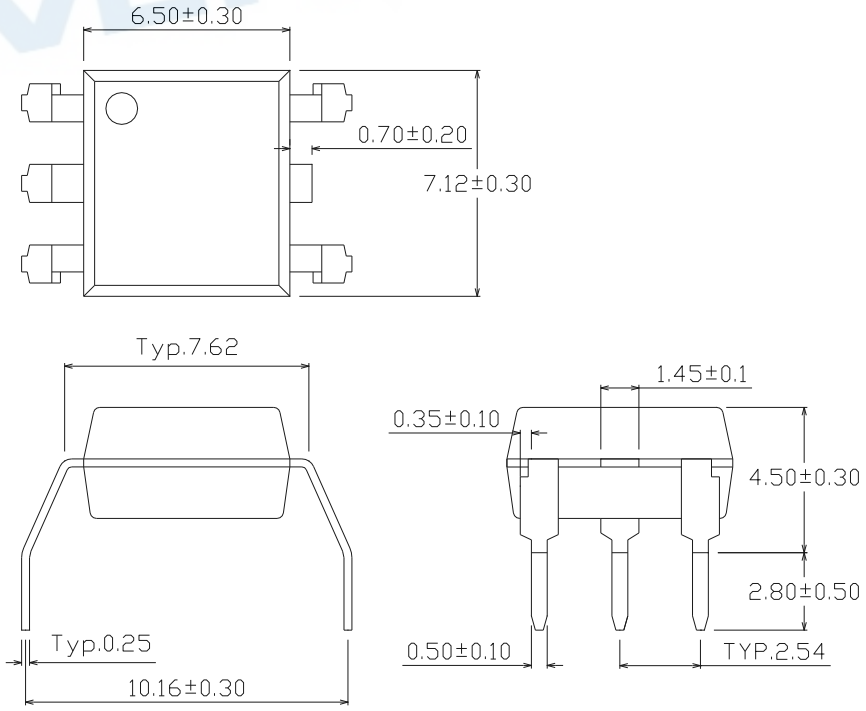

Copyright © 2010, Everlight All Rights Reserved. Release Date: October10 2018. Issue No: DPC-0000075 Rev.9
Ver.:9 Release Date:10/15/2018 狀態:Approved(正式發行)

Option S Type

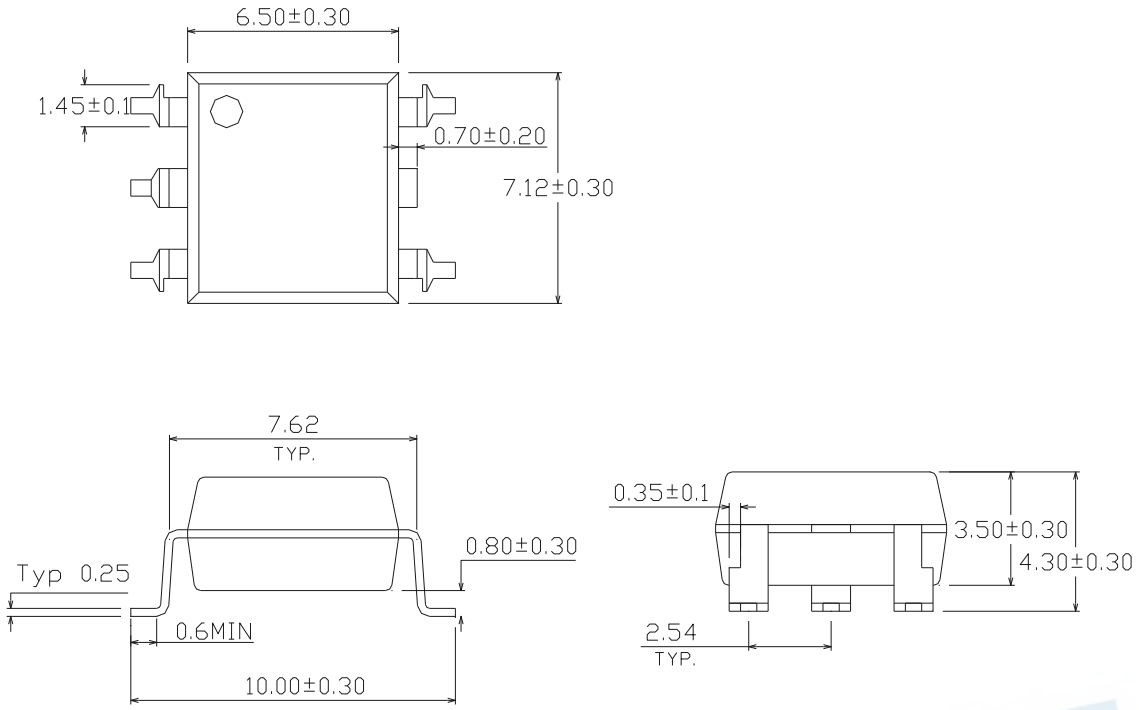

Option S1 Type

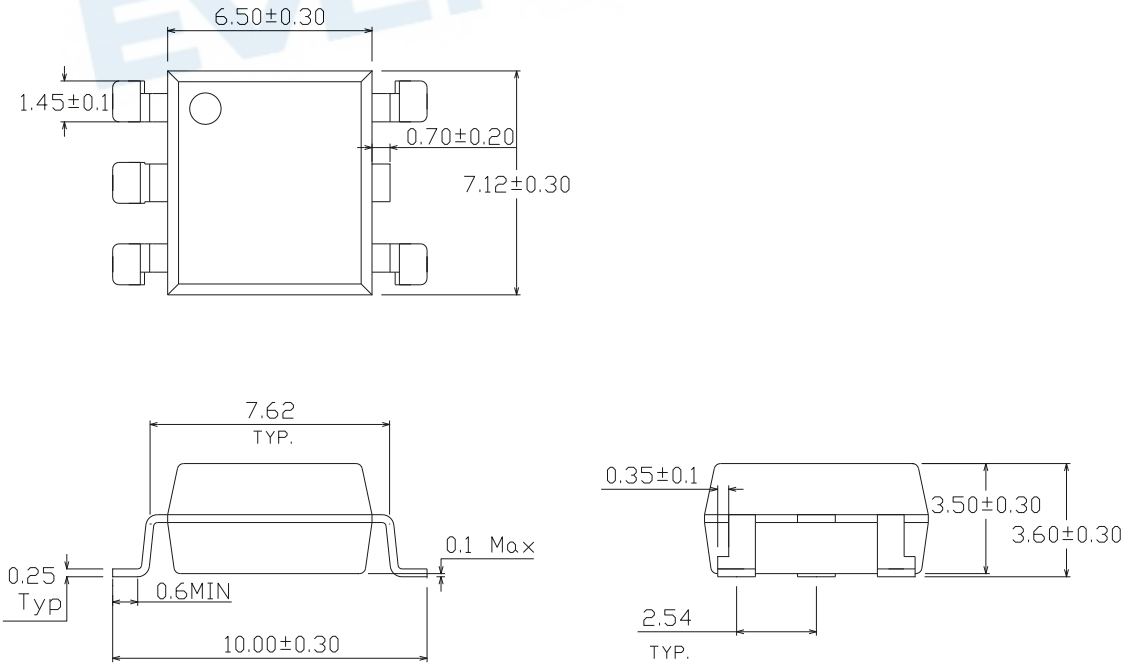

Copyright © 2010, Everlight All Rights Reserved. Release Date: October10 2018. Issue No: DPC-0000075 Rev.9

Ver.9 Release Date:10/15/2018 狀態:Approved(正式發行)

Recommended pad layout for surface mount leadform

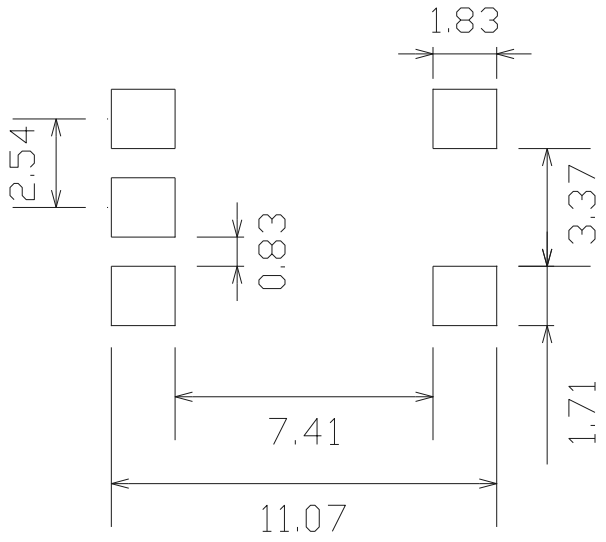

Notes

Suggested pad dimension is just for reference only.
Please modify the pad dimension based on individual need.

Device Marking

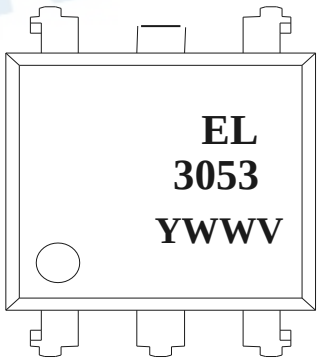

Notes

EL	denotes EVERLIGHT
3053	denotes Device Number
Y	denotes 1 digit Year code
WW	denotes 2 digit Week code
V	denotes VDE (optional)

Copyright © 2010, Everlight All Rights Reserved. Release Date: October10 2018. Issue No: DPC-0000075 Rev.9

Ver.:9 Release Date:10/15/2018 狀態:Approved(正式發行)

Tape & Reel Packing Specifications

Option TA

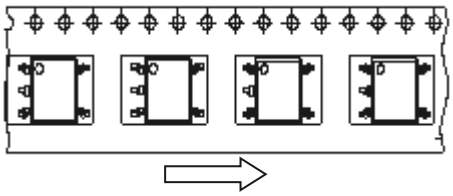

Direction of feed from reel

Option TB

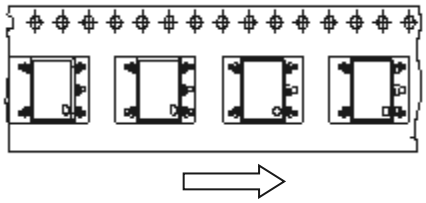

Direction of feed from reel

Tape dimensions

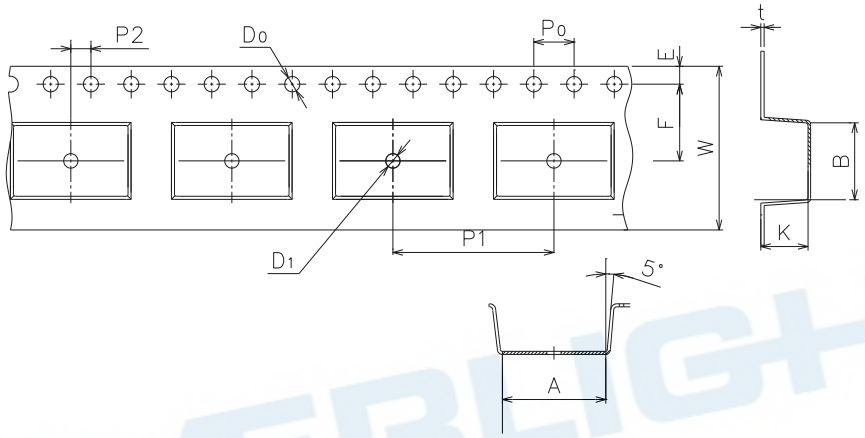

Dimension No.	A	B	Do	D1	E	F
Dimension (mm)	10.8±0.1	7.55±0.1	1.5±0.1	1.5±0.1	1.75±0.1	7.5±0.1

Dimension No.	Po	P1	P2	t	W	K
Dimension (mm)	4.0±0.15	12±0.1	2.0±0.1	0.35±0.03	16.0±0.2	4.5±0.1

Copyright © 2010, Everlight All Rights Reserved. Release Date: October10 2018. Issue No: DPC-0000075 Rev.9
Ver.:9 Release Date:10/15/2018 狀態:Approved(正式發行)

Precautions for Use

1. Soldering Condition

1.1 (A) Maximum Body Case Temperature Profile for evaluation of Reflow Profile

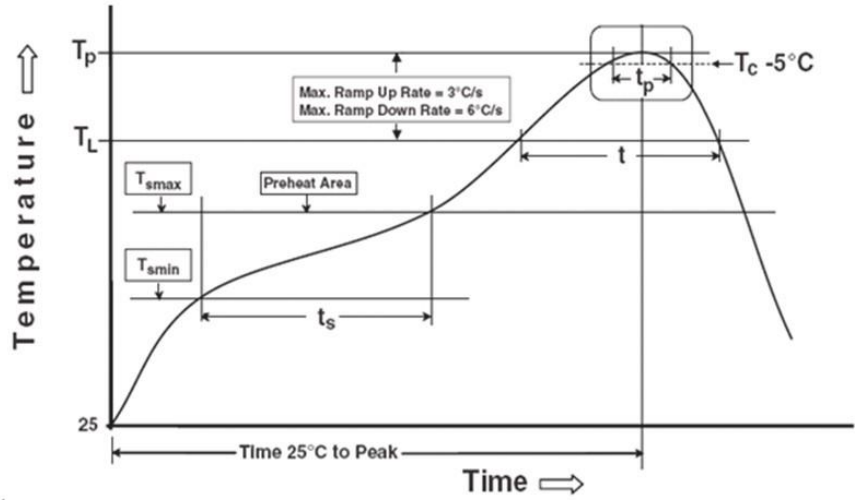

Notes	Reference: IPC/JEDEC J-STD-020D
Preheat	
Temperature min (T_{smin})	150 °C
Temperature max (T_{smax})	200°C
Time (T_{smin} to T_{smax}) (t_s)	60-120 seconds
Average ramp-up rate (T_{smax} to T_p)	3 °C/second max
Other	
Liquidus Temperature (T_L)	217 °C
Time above Liquidus Temperature (t_L)	60-100 sec
Peak Temperature (T_P)	260°C
Time within 5 °C of Actual Peak Temperature: T_P - 5°C	30 s
Ramp- Down Rate from Peak Temperature	6°C /second max.
Time 25°C to peak temperature	8 minutes max.
Reflow times	3 times

.

Copyright © 2010, Everlight All Rights Reserved. Release Date: October10 2018. Issue No: DPC-0000075 Rev.9

Ver.:9 Release Date:10/15/2018 狀態:Approved(正式發行)

DISCLAIMER

1. Above specification may be changed without notice. EVERLIGHT will reserve authority on material change for above specification.
2. The graphs shown in this datasheet are representing typical data only and do not show guaranteed values.
3. When using this product, please observe the absolute maximum ratings and the instructions for use outlined in these specification sheets. EVERLIGHT assumes no responsibility for any damage resulting from use of the product which does not comply with the absolute maximum ratings and the instructions included in these specification sheets.
4. These specification sheets include materials protected under copyright of EVERLIGHT. Reproduction in any form is prohibited without the specific consent of EVERLIGHT.
5. This product is not intended to be used for military, aircraft, automotive, medical, life sustaining or life saving applications or any other application which can result in human injury or death. Please contact authorized Everlight sales agent for special application request.
6. Statements regarding the suitability of products for certain types of applications are based on Everlight's knowledge of typical requirements that are often placed on Everlight products in generic applications. Such statements are not binding statements about the suitability of products for a particular application. It is the customer's responsibility to validate that a particular product with the properties described in the product specification is suitable for use in a particular application. Parameters provided in datasheets and/or specifications may vary in different applications and performance may vary over time. All operating parameters, including typical parameters, must be validated for each customer application by the customer's technical experts. Product specifications do not expand or otherwise modify Everlight's terms and conditions of purchase, including but not limited to the warranty expressed therein.

EVERLIGHT

Copyright © 2010, Everlight All Rights Reserved. Release Date: October10 2018. Issue No: DPC-0000075 Rev.9

Ver.:9 Release Date:10/15/2018 版憑:Approved(正式發行)