THVD4431 具有 120Ω 可切换集成端接电阻器和 IEC-ESD 保护的多协议（RS-232、RS-422、RS485）收发器

1 特性

- 符合或超出 TIA/EIA-485A 和 TIA/EIA-232F 标准的要求
- 3 个发送器、5 个接收器（对于 RS-232）
- 1 个发送器、1 个接收器（对于 RS-485）
- 适用于 RS-485 模式的片上可切换 120Ω 端接电阻器
- 用于 RS-232 信号传输的集成电荷泵
- 3V 至 5.5V 的电源电压
- 用于逻辑数据和控制信号的 1.65V 至 5.5V 电源
- RS-485 差分输出超过 2.1V，在 5V 电源下与 PROFIBUS 兼容
- 适用于 RS-232 模式的大输出摆幅（典型值为 ±9V）
- SLR 引脚可选数据速率：
  - RS-232 3T5R 模式：250kbps 和 1Mbps
  - RS-485 半双工和全双工模式：500kbps 和 20Mbps
- 总线 I/O 保护
  - ±16kV HBM ESD
  - ±8kV IEC 61000-4-2 接触放电和 ±15kV 气隙放电
  - ±4kV IEC 61000-4-4 快速瞬态突发
- 适用于 RS-232 和 RS-485 模式的诊断环回
- 关断引脚可在禁用状态下实现低电流消耗（典型值为 10μA）
- 适用于热插拔功能的无干扰上电/断电
- 适用于 RS-485 的 1/8 单位负载（多达 256 个总线节点）
- 适用于 RS-485 接收器的开路、短路和空闲总线失效防护
- 总线短路保护、热关断
- 更宽的环境温度范围：-40°C 至 125°C
- 节省空间的高效散热型 6mm x 6mm VQFN-40 封装

2 应用

- 工业 PC
- 工厂自动化和控制
- HVAC 系统
- 楼宇自动化
- 销售点终端
- 电网基础设施
- 工业运输

3 说明

THVD4431 是一款高度集成且稳健的多协议收发器，支持 RS-232、RS-422 和 RS-485 物理层。该器件具有三个发送器和五个接收器，支持 3T5R RS-232 端口。此外，该器件还集成了一个发送器和一个接收器，可支持半双工和全双工 RS-485 端口。模式选择引脚支持共享总线和逻辑引脚，以便这些协议共享单个通用连接器。适用于 RS-485 总线引脚和 RS-232 接收器输入的集成端接无需外部元件即可实现全功能通信端口。该器件具有压摆率选择功能，因此可在两种最大速度（根据 SLR 引脚设置）下使用。

该器件具有集成 4 级 IEC ESD 保护，无需外部系统级保护元件。为 RS-232 和 RS-485 提供的诊断环回模式检查逻辑到总线和总线到逻辑路径的功能完整性，并检查电缆和连接器是否短路。此外，当总线输入均处于开路或短路状态或总线空闲时，RS-485 接收器失效防护功能会将接收到的逻辑输出驱动为逻辑高电平。在关断模式下，该器件消耗的电流超低（典型值为 10μA），非常适合功耗敏感型应用。该器件需要由 3V 至 5.5V 电源为 RS-232 的电荷泵以及 RS-232 和 RS-485 的驱动器/接收器供电。单独的逻辑电源 V_{IO}（1.65V 至 5.5V）使得此器件能够与低电平微控制器连接。

封装信息

器件型号	封装(1)	封装尺寸(2)
THVD4431	VQFN (40)	6mm x 6mm

(1) 有关更多信息，请参阅节 11。
(2) 封装尺寸（长 × 宽）为标称值，并包括引脚（如适用）。

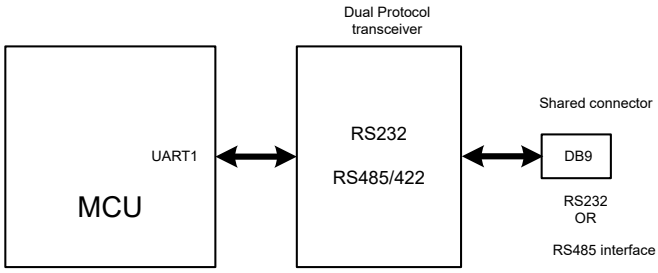

THVD4431 简化原理图

本资源的原文使用英文撰写。 为方便起见，TI 提供了译文；由于翻译过程中可能使用了自动化工具，TI 不保证译文的准确性。 为确认准确性，请务必访问 ti.com 参考最新的英文版本（控制文档）。

Table of Contents

1 特性.....1
2 应用.....1
3 说明.....1
4 Pin Configuration and Functions.....3
5 Specifications.....5
5.1 Absolute Maximum Ratings.....5
5.2 ESD Ratings.....5
5.3 ESD Ratings [IEC].....5
5.4 Recommended Operating Conditions.....6
5.5 Thermal Information.....6
5.6 Power Dissipation.....6
5.7 Electrical Characteristics.....7
5.8 Switching Characteristics_RS-485_500kbps.....10
5.9 Switching Characteristics_RS-485_20Mbps.....10
5.10 Switching Characteristics, Driver_RS232.....11
5.11 Switching Characteristics, Receiver_RS232.....11
5.12 Switching Characteristics_MODE switching.....12
5.13 Switching Characteristics_RS-485_Termination resistor.....13
5.14 Switching Characteristics_Loopback mode.....13
5.15 Typical Characteristics.....15
6 Parameter Measurement Information.....18
7 Detailed Description.....26
7.1 Overview.....26
7.2 Functional Block Diagrams.....26
7.3 Feature Description.....26
7.4 Device Functional Modes.....29
8 Application and Implementation.....36
8.1 **Application Information**.....36
8.2 Typical Application.....36
8.3 Power Supply Recommendations.....42
8.4 Layout.....43
9 Device and Documentation Support.....45
9.1 Device Support.....45
9.2 接收文档更新通知.....45
9.3 支持资源.....45
9.4 Trademarks.....45
9.5 静电放电警告.....45
9.6 术语表.....45
10 Revision History.....45
11 Mechanical, Packaging, and Orderable Information.....45

Copyright © 2024 Texas Instruments Incorporated

4 Pin Configuration and Functions

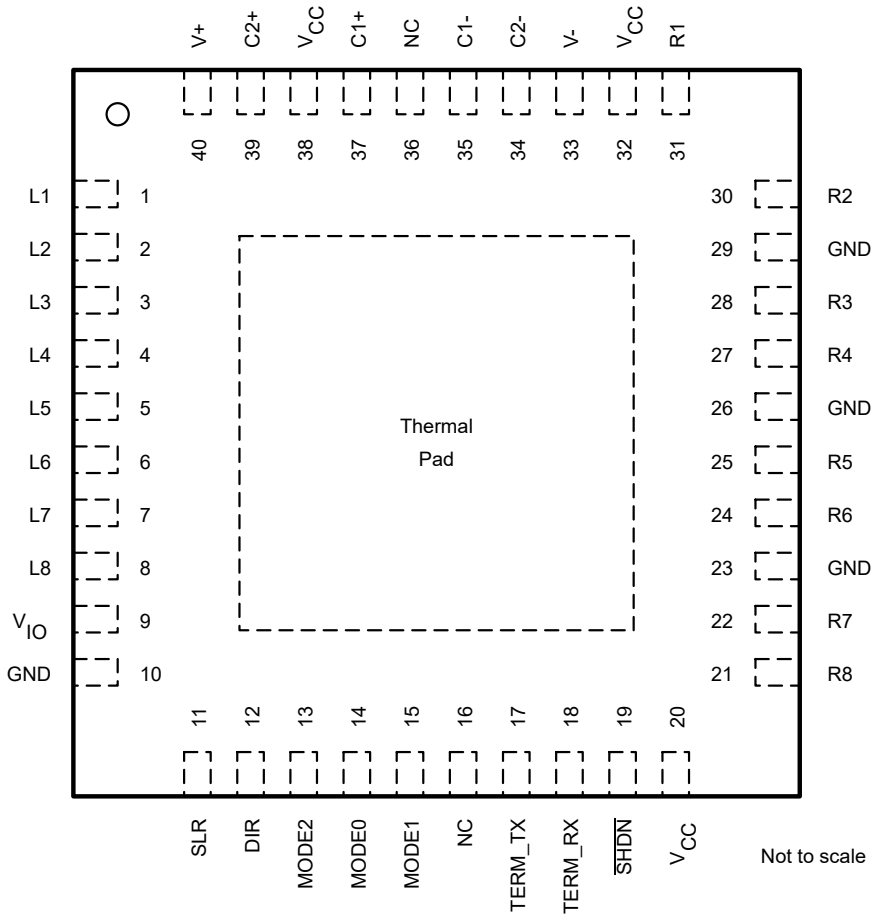

图 4-1. 40-Pin VQFN Package (RHA)
Top View

表 4-1. Pin Functions

NAME	NO.	TYPE	DESCRIPTION
L1	1	O	Logic output (RS-232)
L2	2	O	Logic output (RS-232/RS-485)
L3	3	I	Logic input (RS-232/RS-485). Integrated weak pull-up resistor .
L4	4	I	Logic input. Integrated weak pull-up resistor
L5	5	O	Logic output
L6	6	I	Logic input, Integrated weak pull-up resistor
L7	7	O	Logic output
L8	8	O	Logic output
V_{IO}	9	P	1.65 V to 5.5 V logic supply voltage

Copyright © 2024 Texas Instruments Incorporated

表 4-1. Pin Functions（续）

NAME	NO.	TYPE	DESCRIPTION
GND(1)	10	G	Ground
SLR	11	I	Slew rate control, internal pull-down resistor. SLR=H enables slow speed
DIR	12	I	RS-485 TX/RX enable/disable. Internal pull-down resistor.
MODE2	13	I	MODE control pins, Integrated weak pull-down resistor
MODE0	14	I	
MODE1	15	I	
NC	16	NC	Not connected internally. Can be connected to supply, ground or left open on PCB.
TERM_TX	17	I	120 Ω Termination enable/disable across R1/R2 terminals. Internal Pull down resistor
TERM_RX	18	I	120 Ω Termination enable/disable across R3/R4 terminals. Internal Pull down resistor
$\overline{SHDN}$	19	I	Device enable/disable. Internal pull-down resistor
V_{CC}	20	P	3 to 5.5V supply voltage
R8	21	I	RS-232 receiver input
R7	22	I	RS-232 receiver input
GND(1)	23	G	Ground
R6	24	O	RS-232 driver output
R5	25	I	RS-232 receiver input
GND	26	G	Ground
R4	27	I/O	RS-232 driver output or RS-485 inverting receiver input (B)
R3	28	I/O	RS-232 driver output or RS-485 non-inverting receiver input (A)
GND(1)	29	G	Ground
R2	30	I/O	RS-232 receiver input or RS-485 bus pin (Y or A)
R1	31	I/O	RS-232 receiver input or RS-485 bus pin (Z or B)
V_{CC}	32	P	3 to 5.5 V supply voltage
V-	33		Negative charge pump rail
C2-	34		Negative terminal of charge pump capacitor
C1-	35		Negative terminal of charge pump capacitor
NC	36	NC	Not connected internally. Can be left open or Grounded on PCB.
C1+	37		Positive terminal of charge pump capacitor
V_{CC}	38	P	3 to 5.5V supply voltage
C2+	39		Positive terminal of charge pump capacitor
V+	40		Positive charge pump rail

(1) GND pins 10, 23, 26, 29 all must be grounded on PCB.

Copyright © 2024 Texas Instruments Incorporated

5 Specifications

5.1 Absolute Maximum Ratings

over operating free-air temperature range (unless otherwise noted)(1)

		MIN	MAX	UNIT
Bus supply voltage	V_{CC} to GND	– 0.5	6	V
Logic supply voltage	V_{IO} to GND	– 0.5	V_{CC} + 0.2	V
Charge pump positive-output supply voltage	V+ to GND	– 0.3	14	V
Charge pump negative-output supply voltage	V- to GND	-14	0.3	V
Bus voltage	Voltage at any bus pin (R1, R2, R3, R4, R5, R6, R7, R8) with respect to GND	– 16	16	V
Differential bus voltage	(R1-R2) or (R2-R1), (R3-R4) or (R4-R3) with termination disbled	-22	22	V
Differential bus voltage RS485 mode	(R1-R2) or (R2-R1), (R3-R4) or (R4-R3) with termination enabled	-6	6	V
Input voltage	Range at any logic pin (L3, L4, L6, SLR, $\overline{SHDN}$, TERM_TX, TERM_RX, MODE0, MODE1, MODE2, DIR)	– 0.3	V_{IO} + 0.2	V
Receiver output current	I_O (L1, L2, L5, L7, L8)	– 8	8	mA
Storage temperature	T_{stg}	– 65	150	°C
Junction temperature	T_J	-40	170	°C

(1) Operation outside the Absolute Maximum Ratings may cause permanent device damage. Absolute Maximum Ratings do not imply functional operation of the device at these or any other conditions beyond those listed under Recommended Operating Conditions. If used outside the Recommended Operating Conditions but within the Absolute Maximum Ratings, the device may not be fully functional, and this may affect device reliability, functionality, performance, and shorten the device lifetime.

5.2 ESD Ratings

				VALUE	UNIT
$V_{(ESD)}$	Electrostatic discharge	Human-body model (HBM), per ANSI/ESDA/JEDEC JS-001(1)	Bus terminals (R1, R2, R3, R4, R5, R6, R7, R8) and GND	±16,000	V
			All pins except bus terminals and GND	±4,000	V
		Charged-device model (CDM), per JEDEC specification JESD22-C101(2)		±1,500	V

(1) JEDEC document JEP155 states that 500-V HBM allows safe manufacturing with a standard ESD control process.
(2) JEDEC document JEP157 states that 250-V CDM allows safe manufacturing with a standard ESD control process.

5.3 ESD Ratings [IEC]

				VALUE	UNIT
$V_{(ESD)}$		Contact discharge, per IEC 61000-4-2	Bus terminals (R1, R2, R3, R4, R5, R6, R7, R8) and GND	±8,000	V
		Air-gap discharge, per IEC 61000-4-2		±15,000	
$V_{(EFT)}$	Electrical fast transient in RS485 HD or FD mode	Per IEC 61000-4-4	Bus terminals (R1, R2, R3, R4)	±4,000	V

Copyright © 2024 Texas Instruments Incorporated

5.4 Recommended Operating Conditions

over operating free-air temperature range (unless otherwise noted)

			MIN	NOM	MAX	UNIT
V_{CC}	Supply voltage		3		5.5	V
V_{IO}	I/O supply voltage		1.65		V_{CC}	V
$V_{I\ (RS-485)}$	Input voltage at any bus terminal (R1, R2, R3, R4) in RS-485 mode(1)		– 7		12	V
V_{ID}	Differential input voltage in RS-485 receive mode [(R1-R2) or (R2-R1), (R3-R4) or (R4-R3)] with on-chip termination resistor disabled		-12		12	V
V_{ID}	Differential input voltage in RS-485 receive mode [(R1-R2) or (R2-R1), (R3-R4) or (R4-R3)] with on-chip termination resistor enabled		- 5.5		5.5	V
$V_{I\ (RS-232)}$	Receiver input voltage in RS-232 mode		-15		15	V
V_{IH}	High-level input voltage (L3, L4, L6, SLR, $\overline{SHDN}$, TERM_TX, TERM_RX, MODE0, MODE1, MODE2, DIR inputs)		0.7*V_{IO}		V_{IO}	V
V_{IL}	Low-level input voltage (L3, L4, L6, SLR, $\overline{SHDN}$, TERM_TX, TERM_RX, MODE0, MODE1, MODE2, DIR inputs)		0		0.3*V_{IO}	V
I_O	Output current, driver in RS-485 mode		– 60		60	mA
I_{OR}	Output current, receiver	V_{IO} = 1.8 V or 2.5 V	– 2		2	mA
I_{OR}	Output current, receiver	V_{IO} = 3.3 V or 5 V	– 4		4	mA
R_L	Differential load resistance in RS-485 mode		54	60		Ω
$1/t_{UI}$	Signaling rate in RS-485 mode	SLR = V_{IO}			500	kbps
		SLR = GND or floating			20	Mbps
	Signaling rate in RS-232 mode	SLR = V_{IO}			250	kbps
		SLR = GND or floating			1	Mbps
$1/t_{UI\ (loopback)}$	Signaling rate in RS-485 loopback mode				0.5	Mbps
	Signaling rate in RS-232 loopback mode				1	Mbps
T_A (2)	Operating ambient temperature		-40		125	°C

(1) The algebraic convention, in which the least positive (most negative) limit is designated as minimum is used in this data sheet.
(2) Operation is specified for internal (junction) temperatures upto 150°C. Self-heating due to internal power dissipation should be considered for each application. Maximum junction temperature is internally limited by the thermal shut-down (TSD) circuit which disables the driver and receiver when the junction temperature reaches 170°C.

5.5 Thermal Information

THERMAL METRIC(1)		THVD4431 RHA (QFN) 40 PINS	UNIT
$R_{\theta\ JA}$	Junction-to-ambient thermal resistance	27.4	°C/W
$R_{\theta\ JC(top)}$	Junction-to-case (top) thermal resistance	16.8	°C/W
$R_{\theta\ JB}$	Junction-to-board thermal resistance	9.8	°C/W
ψ_{JT}	Junction-to-top characterization parameter	0.2	°C/W
ψ_{JB}	Junction-to-board characterization parameter	9.8	°C/W
$R_{\theta\ JC(bot)}$	Junction-to-case (bottom) thermal resistance	2.7	°C/W

(1) For more information about traditional and new thermalmetrics, see the *Semiconductor and ICPackage Thermal Metrics* application report.

5.6 Power Dissipation

PARAMETER		TEST CONDITIONS			Typical	Max	UNIT
$P_{D\ (RS-485)}$	Full Duplex mode with DIR = V_{IO}, MODE2, MODE1, MODE0 = 011, R2/R1 are externally connected to R3/R4 in loopback fashion; V_{IO} = V_{CC} = 5.5 V, T_A = 125 °C, L3 = square wave 50% duty	Unterminated, TERM_TX = L, TERM_RX = L	SLR = H	500 kbps	160	200	mW
			SLR = L	20Mbps	390	450	
		TERM_TX = TERM_RX = V_{IO}	SLR = H	500 kbps	430	500	mW
			SLR = L	20Mbps	500	575	

Copyright © 2024 Texas Instruments Incorporated

5.6 Power Dissipation（续）

PARAMETER		TEST CONDITIONS			Typical	Max	UNIT
$P_{D\ (RS-232)}$	RS-232 mode with MODE2, MODE1, MODE0 = 001	V_{CC} = V_{IO} = 5.5V, R3, R4, R6 bus lines loaded with 3 kΩ, R3 load cap = 1000 pF, L3 toggling	SLR = L	1 Mbps	320	500	mW
		V_{CC} = V_{IO} = 5.5V, R3, R4, R6 bus lines loaded with 3 kΩ, R3 load cap = 2500 pF, L3 toggling	SLR = H	250 kbps	185	200	mW

5.7 Electrical Characteristics

over operating free-air temperature range (unless otherwise noted). All typical values are at 25°C and supply voltage of V_{CC} = 5 V, V_{IO} = 3.3 V , unless otherwise noted.

PARAMETER		TEST CONDITIONS		MIN	TYP	MAX	UNIT
Driver_RS-485							
$\|V_{OD}\|$	Driver differential output voltage magnitude	R_L = 60 Ω, –7 V ≤ V_{test} ≤ 12 V (See 图 6-1)		1.5	2		V
		R_L = 60 Ω, –7 V ≤ V_{test} ≤ 12 V, 4.5 V ≤ V_{CC} ≤ 5.5 V (See 图 6-1)		2.1	3		V
		R_L = 100 Ω (See 图 6-2)		2	2.5		V
		R_L = 54 Ω, 4.5 V ≤ V_{CC} ≤ 5.5 V (See 图 6-2)		2.1	3.3		V
		R_L = 54 Ω (See 图 6-2)		1.5	3.3		V
$\Delta\|V_{OD}\|$	Change in magnitude of differential output voltage	R_L = 54 Ω or 100 Ω (See 图 6-2)		–50		50	mV
V_{OC}	Common-mode output voltage	R_L = 54 Ω or 100 Ω (See 图 6-2)			V_{CC}/2	3	V
$\Delta V_{OC(SS)}$	Change in steady-state common-mode output voltage	R_L = 54 Ω or 100 Ω (See 图 6-2)		–50		50	mV
I_{OS}	Short-circuit output current (bus terminals)	DIR = V_{IO}, -7 V ≤ (V_{R2} or V_{R1}) ≤ 12 V, or R1 shorted to R2		–250		250	mA
I_{OZD}	Driver High impedance output leakage current on R1 and R2 in Full duplex mode	MODE2, MODE1, MODE0 = 011 , TERM_TX = GND, DIR = GND, V_{CC} = GND or 5.5V, V_O = -7V, +12V		-125		125	µA
		MODE2, MODE1, MODE0 = 011, TERM_TX = V_{IO}, DIR = GND, V_{CC} = 5.5V, V_O = -7V, +12V		- 325		350	µA
Receiver_RS-485							
I_I	Bus input current (termination disabled)	Half and full duplex modes, DIR = 0 V, V_{CC} and V_{IO} = 0 V or 5.5 V	V_I = 12 V		75	125	µA
			V_I = –7 V	–125	–70		µA
I_{RXT}	Receiver bus input leakage current with termination enabled	Full duplex mode, V_{CC} and V_{IO} = 5.5 V, TERM_RX = V_{IO}	VI = - 7 to 12 V	-325		325	µA
V_{TH+}	Positive-going input threshold voltage(1)	Over common-mode range of - 7 V to 12 V			- 70	- 40	mV
V_{TH-}	Negative-going input threshold voltage(1)			–200	–150		mV
V_{HYS}	Input hysteresis			25	80		mV
$C_{A,B}$	Input differential capacitance	Measured between R3 and R4, f = 1 MHz			45		pF
V_{OH}	Output high voltage, L2 pin	I_{OH} = –4 mA, V_{IO} = 3 to 3.6 V or 4.5 V to 5.5 V		V_{IO} – 0.4	V_{IO} – 0.2		V
V_{OL}	Output low voltage, L2 pin	I_{OL} = 4 mA, V_{IO} = 3 to 3.6 V or 4.5 V to 5.5 V			0.2	0.4	V
V_{OH}	Output high voltage, L2 pin	I_{OH} = –2 mA, V_{IO} = 1.65 to 1.95 V or 2.25 V to 2.75 V		V_{IO} – 0.4	V_{IO} – 0.2		V
V_{OL}	Output low voltage, L2 pin	I_{OL} = 2 mA, V_{IO} = 1.65 to 1.95 V or 2.25 V to 2.75 V			0.2	0.4	V
I_{OZ}	Output high-impedance current, L2 pin	V_O = 0 V or V_{IO}, DIR = VIO, MODE2, MODE1, MODE0= 010 (half duplex mode)		–2		2	µA
Driver_RS-232							
V_{OH}	High-level output voltage	All DOUT (R3, R4, R6) at R_L = 3 kΩ to GND, DIN (L3, L4, L6) = GND; V_{CC} = 3 V to 3.6 V		5	5.5	7.2	V

Copyright © 2024 Texas Instruments Incorporated

5.7 Electrical Characteristics（续）

over operating free-air temperature range (unless otherwise noted). All typical values are at 25°C and supply voltage of V_{CC} = 5 V, V_{IO} = 3.3 V , unless otherwise noted.

PARAMETER		TEST CONDITIONS			MIN	TYP	MAX	UNIT
V_{OL}	Low-level output voltage	All DOUT (R3, R4, R6) at R_L = 3 kΩ to GND, DIN (L3, L4, L6) = V_{IO} ; V_{CC} = 3 V to 3.6 V			-7.2	-5.5	-5	V
V_{OH}	High-level output voltage	All DOUT (R3, R4, R6) at R_L = 3 kΩ to GND, DIN (L3, L4, L6) = GND; V_{CC} = 4.5 V to 5.5 V			7.8	9	11	V
V_{OL}	Low-level output voltage	All DOUT (R3, R4, R6) at R_L = 3 kΩ to GND, DIN (L3, L4, L6) = V_{IO} ; V_{CC} = 4.5 V to 5.5 V			-11	-9	-7.8	V
I_{OS}	Short-circuit output current (2)	V_{CC} = 3.6 V	V_O = 0 V			±35	±60	mA
		V_{CC} = 5.5 V	V_O = 0 V					
r_o	Output resistance on R3, R4, R6	V_{CC} = 0 V, V_+ = 0 V, and V_- = 0 V	V_O = ±2 V		300	10M		Ω
I_{off}	Output leakage current on R3, R4, R6	$\overline{SHDN}$ = GND	V_O = ±12 V	V_{CC} = 3 to 3.6 V			±125	μA
			V_O = ±10 V	V_{CC} = 4.5 to 5.5 V			±125	μA
Receiver_RS-232								
V_{OH}	High-level output voltage L1/L2/L5/L7/L8	I_{OH} = –4 mA, V_{IO} = 3 to 3.6 V or 4.5 V to 5.5 V			V_{IO} – 0.5	V_{IO} – 0.2		V
		I_{OH} = –2 mA, V_{IO} = 1.65 to 1.95 V or 2.25 V to 2.75 V			V_{IO} – 0.48	V_{IO} – 0.2		V
V_{OL}	Low-level output voltage L1/L2/L5/L7/L8	I_{OL} = 4 mA, V_{IO} = 3 to 3.6 V or 4.5 V to 5.5 V					0.4	V
		I_{OL} = 2 mA, V_{IO} = 1.65 to 1.95 V or 2.25 V to 2.75 V					0.4	V
V_{IT+}	Positive-going input threshold voltage on RS-232 receiver inputs (R1, R2, R5, R7, R8)	V_{CC} = 3.3 V				1.6	2.4	V
		V_{CC} = 5 V				1.9	2.4	V
V_{IT-}	Negative-going input threshold voltage on RS-232 receiver inputs (R1, R2, R5, R7, R8)	V_{CC} = 3.3 V			0.6	1.1		V
		V_{CC} = 5 V			0.8	1.4		V
V_{hys}	Input hysteresis on receiver inputs (V_{IT+} – V_{IT-})				0.4	0.5		V
I_{off}	Output leakage current on receiver output pins L1/L2/L5/L7/L8	$\overline{SHDN}$ = 0 V				±0.05	±10	μA
r_I	Input resistance on receiver input pins	-15 V ≤ V_I ≤ 15 V			3	5	7	kΩ
Thermal Protection								
T_{SHDN}	Thermal shutdown threshold	Temperature rising			150	170		°C
T_{HYS}	Thermal shutdown hysteresis					15		°C
Supply								
$UV_{VCC (rising)}$	Rising under-voltage threshold on V_{CC}					2.5	2.8	V
$UV_{VCC (falling)}$	Falling under-voltage threshold on V_{CC}				1.9	2.1		V
$UV_{VCC(hys)}$	Hysteresis on under-voltage of V_{CC}				100	400		mV
$UV_{VIO (rising)}$	Rising under-voltage threshold on V_{IO}					1.5	1.6	V
$UV_{VIO (falling)}$	Falling under-voltage threshold on V_{IO}				1.2	1.4		V
$UV_{VIO(hys)}$	Hysteresis on under-voltage of V_{IO}				85	100		mV

Copyright © 2024 Texas Instruments Incorporated

5.7 Electrical Characteristics（续）

over operating free-air temperature range (unless otherwise noted). All typical values are at 25°C and supply voltage of V_{CC} = 5 V, V_{IO} = 3.3 V , unless otherwise noted.

PARAMETER		TEST CONDITIONS		MIN	TYP	MAX	UNIT
I_{CC_SHDN}	Supply current in shutdown mode	V_{CC} = 4.5 V to 5.5 V, $\overline{SHDN}$ = GND, All other logic input pins floating, no load on bus, $T_A \leqslant 125$ ℃			5	20	μA
		V_{CC} = 3 V to 3.6 V, $\overline{SHDN}$ = GND, All other logic input pins floating, no load on bus, $T_A \leqslant 125$ ℃			3	15	μA
		V_{CC} = 4.5 V to 5.5 V, $\overline{SHDN}$ = GND, All other logic input pins floating, no load on bus, $T_A \leqslant 105$ ℃			5	15	μA
		V_{CC} = 3 V to 3.6 V, $\overline{SHDN}$ = GND, All other logic input pins floating, no load on bus, $T_A \leqslant 105$ ℃			3	10	μA
I_{IO_SHDN}	Logic supply current in shutdown mode	V_{IO} = 1.65 V to 5.5 V, $\overline{SHDN}$ = GND, All other logic input pins floating				2	μA
I_{CC_485}	Supply current (quiescent), V_{CC} = 4.5 V to 5.5 V TERM_RX, TERM_TX= Floating or low, SLR = X	Driver and receiver enabled, DIR = V_{IO}, MODE2, MODE1, MODE0 = 011 (Full duplex)	No load		1.7	3.4	mA
		Driver enabled, receiver disabled, DIR = V_{IO}, MODE2, MODE1, MODE0 = 010 (Half duplex)	No load		1.3	2.8	mA
		Driver disabled, receiver enabled, DIR = GND, MODE2, MODE1, MODE0 = 010 (Half duplex)	No load		0.8	1.5	mA
I_{CC_485}	Supply current (quiescent), V_{CC} = 3 V to 3.6 V TERM_RX, TERM_TX= Floating or low, SLR = X	Driver and receiver enabled, DIR = V_{IO}, MODE2, MODE1, MODE0 = 011 (Full duplex)	No load		1.5	2.8	mA
		Driver enabled, receiver disabled, DIR = V_{IO}, MODE2, MODE1, MODE0 = 010 (Half duplex)	No load		1	2.3	mA
		Driver disabled, receiver enabled, DIR = GND, MODE2, MODE1, MODE0 = 010 (Half duplex)	No load		0.7	1.3	mA
I_{IO_485}	Logic supply current (quiescent), V_{IO} = 3 to 3.6 V TERM_RX, TERM_TX= Floating	Driver disabled, Receiver enabled, SLR = GND, DIR = GND; MODE2, MODE1, MODE0 = 010 (half duplex)	No load		7	17	μA
		Driver disabled, Receiver enabled, SLR = V_{IO}; DIR = GND; MODE2, MODE1, MODE0 = 010 (half duplex)	No load		8	21	μA
I_{CCDT_485}	Supply current in RS-485 driver termination mode	Driver enabled with termination ON; MODE2, MODE1, MODE0 = 011 (full duplex)	DIR= V_{IO}, TERM_TX = V_{IO}		38	50	mA
I_{CCRT_485}	Supply current in RS-485 receiver termination mode	Receiver enabled with termination ON; MODE2, MODE1, MODE0 = 011 (full duplex)	DIR = GND, TERM_RX = V_{IO}		1	1.5	mA
I_{CC_RS232}	Supply current in RS-232 mode	MODE2, MODE1, MODE0 = 001, $\overline{SHDN}$ = V_{IO}; other logic inputs floating	No load		4	6	mA
$I_{CC_RS232_LB}$	Supply current in RS-232 loopback mode	MODE2 = x, MODE1 = 0, MODE0 = 0; L3 = L4 = L6 = static logic high, -40 ℃ $\leqslant T_A \leqslant$ 85 ℃	No extra load on RS-232 drivers or on logic output		25	31	mA
$I_{CC_RS485_LB}$	Supply current in RS-485 loopback mode	MODE2 = MODE1= MODE0 = V_{IO} ; L3 = static logic high	No load on bus or logic output		3	4	mA
On-Chip termination resistor_RS-485							
R_{TERM_TX}	120 Ω termination across Driver output R1/R2 terminals	MODE2, MODE1, MODE0 = 011 (Full duplex) or 010 (half duplex); DIR = GND, TERM_TX = V_{IO}, V_{R2R1} = 2 V, V_{R1} = -7 V, 0 V, 10 V; See 图 6-9		102	120	138	Ω
R_{TERM_RX}	120 Ω termination across receiver output R3/R4 terminals	MODE2, MODE1, MODE0 = 011 (Full duplex); TERM_RX = V_{IO}, V_{R3R4} = 2 V, V_{R4} = -7 V, 0 V, 10 V; See 图 6-9		102	120	138	Ω
Logic							
I_{IN}	Input current (L3, L4, L6, DIR, $\overline{SHDN}$, SLR, TERM_TX, TERM_RX, MODE2, MODE1, MODE0)	1.65 V $\leqslant V_{IO} \leqslant$ 5.5 V, 0 V $\leqslant V_{IN} \leqslant V_{IO}$		-20		5	μA
$V_{IT+(IN)}$	Rising threshold: logic inputs	1.65 V $\leqslant V_{IO} \leqslant$ 5.5 V			0.6*V_{IO}	0.7*V_{IO}	V
$V_{IT-(IN)}$	Falling threshold: logic inputs			0.3*V_{IO}	0.4*V_{IO}		V
$V_{IN(HYS)}$	Input threshold: logic inputs			0.1*V_{IO}	0.2*V_{IO}		V

(1) Under any specific conditions, V_{TH+} is assured to be at least V_{HYS} higher than V_{TH-}.

Copyright © 2024 Texas Instruments Incorporated

(2) Short-circuit durations should be controlled to prevent exceeding the device absolute power dissipation ratings, and not more than one output should be shorted at a time.

5.8 Switching Characteristics_RS-485_500kbps

500-kbps (with SLR = V_{IO}) over recommended operating conditions. All typical values are at 25°C and supply voltage of V_{CC} = 5 V , V_{IO} = 3.3 V, unless otherwise noted. (1)

PARAMETER		TEST CONDITIONS		MIN	TYP	MAX	UNIT
Driver							
t_r, t_f	Differential output rise/fall time	R_L = 54 Ω, C_L = 50 pF See 图 6-3	V_{CC} = 3 to 3.6 V, Typical at 3.3V	210	300	600	ns
			V_{CC} = 4.5 to 5.5 V, Typical at 5 V	250	300	600	ns
t_{PHL}, t_{PLH}	Propagation delay		V_{CC} = 3 to 3.6 V, Typical at 3.3V		250	450	ns
			V_{CC} = 4.5 to 5.5 V, Typical at 5 V		250	450	ns
$t_{SK(P)}$	Pulse skew, $\lvert t_{PHL} - t_{PLH} \rvert$		V_{CC} = 3 to 3.6 V, Typical at 3.3V		2	15	ns
			V_{CC} = 4.5 to 5.5 V, Typical at 5 V		2	15	ns
t_{PHZ}, t_{PLZ}	Disable time	MODE2, MODE1, MODE0 = 010 (half duplex) or 011 (full duplex)	See 图 6-4 and 图 6-5		80	150	ns
t_{PZH}, t_{PZL}	Enable time	MODE2, MODE1, MODE0 = 011 (full duplex): receiver enabled			200	650	ns
Receiver							
t_r, t_f	Output rise/fall time	C_L = 15 pF	See 图 6-6		5	10	ns
t_{PHL}, t_{PLH}	Propagation delay				700	1200	ns
$t_{SK(P)}$	Pulse skew, $\lvert t_{PHL} - t_{PLH} \rvert$				10	45	ns
t_{PHZ}, t_{PLZ}	Disable time in half duplex mode	MODE2, MODE1, MODE0 = 010, TERM_TX = V_{IO}	See 图 6-7		30	80	ns
$t_{PZH(1)}$	Enable time in half duplex mode				60	155	ns
$t_{PZL(1)}$					450	1250	ns
$t_{PZH(2)}$, $t_{PZL(2)}$	Enable time from shutdown with TX disabled in full duplex mode	DIR = 0 V; MODE2, MODE1, MODE0 = 011	See 图 6-8		7	16	µs

(1) R3, R4 are RX input, R2/R1 are driver output terminals in Full duplex mode

5.9 Switching Characteristics_RS-485_20Mbps

20-Mbps (SLR = GND) over recommended operating conditions. All typical values are at 25°C and supply voltage of V_{CC} = 5 V, V_{IO} = 3.3 V. (1)

PARAMETER		TEST CONDITIONS		MIN	TYP	MAX	UNIT
Driver							
t_r, t_f	Differential output rise/fall time	R_L = 54 Ω, C_L = 50 pF See 图 6-3	V_{CC} = 3 to 3.6 V, Typical at 3.3 V	5	10	15	ns
			V_{CC} = 4.5 to 5.5 V, Typical at 5 V	5	10	15	ns
t_{PHL}, t_{PLH}	Propagation delay		V_{IO} = 1.65 V to 1.95V	14	25	58	ns
			V_{IO} = 3 V to 3.6 V	9	20	46	ns
$t_{SK(P)}$	Pulse skew, $\lvert t_{PHL} - t_{PLH} \rvert$		V_{CC} = 3 to 3.6 V, Typical at 3.3 V		1	3.5	ns
			V_{CC} = 4.5 to 5.5 V, Typical at 5 V		1	3.5	ns
t_{PHZ}, t_{PLZ}	Disable time	MODE2, MODE1, MODE0 = 010 (half duplex) or 011 (full duplex)	See 图 6-4 and 图 6-5		11	65	ns
t_{PZH}, t_{PZL}	Enable time	MODE2, MODE1, MODE0 = 011 (full duplex): receiver enabled			8	80	ns
Receiver							

Copyright © 2024 Texas Instruments Incorporated

5.9 Switching Characteristics_RS-485_20Mbps（续）

20-Mbps (SLR = GND) over recommended operating conditions. All typical values are at 25°C and supply voltage of V_{CC} = 5 V, V_{IO} = 3.3 V. (1)

PARAMETER		TEST CONDITIONS		MIN	TYP	MAX	UNIT
t_r, t_f	Output rise/fall time	C_L = 15 pF	See 图 6-6		5	10	ns
t_{PHL}, t_{PLH}	Propagation delay				40	70	ns
$t_{SK(P)}$	Pulse skew, $\|t_{PHL} - t_{PLH}\|$					10	ns
t_{PHZ}, t_{PLZ}	Disable time in half duplex mode	MODE2, MODE1, MODE0 = 010, TERM_TX = V_{IO}	See 图 6-7		20	80	ns
$t_{PZH(1)}$, $t_{PZL(1)}$	Enable time in half duplex mode (includes driver disable time as per setup)				50	160	ns
$t_{PZH(2)}$, $t_{PZL(2)}$	Enable time from shutdown with TX disabled in full duplex mode	DIR = 0 V; MODE2, MODE1, MODE0 = 011	See 图 6-8		4	15	μs

(1) R3, R4 are RX input, R2/R1 are driver output terminals in Full duplex mode.

5.10 Switching Characteristics, Driver_RS232

over recommended ranges of supply voltage and operating free-air temperature(unless otherwise noted)(1)

PARAMETER		TEST CONDITIONS		MIN	TYP(2)	MAX	UNIT
250 kbps							
	Maximum data rate	R_L = 3 kΩ One DOUT switching	C_L = 2500 pF See 图 6-16	250	500		kbps
t_{PHL}, t_{PHL}	Transmitter propagation delay	R_L = 3 kΩ to 7 kΩ	C_L = 150 pF to 2500 pF See 图 6-16		0.8	2	μs
$t_{sk(p)}$	Transmitter Pulse skew(3)				220	600	ns
SR(tr)	Slew rate, transition region	V_{CC} = 3.3 V ± 10%, 5 V ± 10% , R_L = 3 kΩ to 7 kΩ, See 图 6-17	C_L = 150 pF to 1000 pF	6		30	V/μs
			C_L = 150 pF to 2500 pF	4		30	
1 Mbps							
	Maximum data rate	R_L = 3 kΩ One DOUT switching,See 图 6-16	C_L = 250 pF, V_{CC} = 3 to 3.6 V	1000			kbps
			C_L = 1000 pF, V_{CC} = 4.5 to 5.5 V	1000			kbps
t_{PLH}, t_{PHL}	Transmitter propagation delay	R_L = 3k to 7 kΩ, See 图 6-16	C_L = 150 pF to 1000 pF		300	800	ns
$t_{sk(p)}$	Pulse skew(3)				25	150	ns
SR(tr)	Slew rate, transition region	R_L = 3k to 7 kΩ, V_{CC} = 4.5V to 5.5V	C_L = 150 pF to 1000 pF See 图 6-17	18		150	V/μs
		R_L = 3k to 7 kΩ, V_{CC} = 3V to 3.6V		15		150	V/μs

(1) Test conditions are C1 – C4 = 0.1 μF at V_{CC} = 3.3 V + 0.3 V; V_{CC} = 5 V ± 0.5 V.
(2) All typical values are at V_{CC} = 3.3 V or V_{CC} = 5 V, and T_A = 25°C.
(3) Pulse skew is defined as $|t_{PLH} - t_{PHL}|$ of each channel of the same device.

5.11 Switching Characteristics, Receiver_RS232

over recommended ranges of supply voltage and operating free-air temperature (unlessotherwise noted)(1)

PARAMETER		TEST CONDITIONS	MIN	TYP(2)	MAX	UNIT
250 kbps						
t_{PLH}	Propagation delay time, low- to high-level output	C_L = 150 pF, See 图 6-18		150	550	ns
t_{PHL}	Propagation delay time, high- to low-level output			150	550	ns
t_{PLH}	Propagation delay time, low- to high-level output	C_L = 15 pF, See 图 6-18		130	520	ns
t_{PHL}	Propagation delay time, high- to low-level output			130	520	ns

Copyright © 2024 Texas Instruments Incorporated

5.11 Switching Characteristics, Receiver_RS232（续）

over recommended ranges of supply voltage and operating free-air temperature (unlessotherwise noted)(1)

PARAMETER		TEST CONDITIONS	MIN	TYP(2)	MAX	UNIT
t_{R_232}, t_{F_232}	Rise/fall time (receiver buffer output), V_{IO} = 3 to 5.5 V	C_L = 150 pF, See 图 6-18		20	50	ns
		C_L = 15 pF, See 图 6-18		5	10	ns
	Rise/fall time (receiver buffer output), V_{IO} = 1.65 to 2.75 V	C_L = 150 pF, See 图 6-18		40	90	ns
		C_L = 15 pF, See 图 6-18		10	20	ns
t_{en}	Output enable time	C_L = 150 pF, R_L = 3 kΩ, See 图 6-19		6	14	us
t_{dis}	Output disable time			100	200	ns
$t_{sk(p)}$	Pulse skew(3)	C_L = 150 pF, See 图 6-18		50	135	ns
		C_L = 15 pF, See 图 6-18		50	135	ns
1 Mbps						
t_{PLH}	Propagation delay time, low- to high-level output	C_L = 150 pF, See 图 6-18		150	550	ns
t_{PHL}	Propagation delay time, high- to low-level output			150	550	ns
t_{PLH}	Propagation delay time, low- to high-level output	C_L = 15 pF, See 图 6-18		130	520	ns
t_{PHL}	Propagation delay time, high- to low-level output			130	520	ns
t_{R_232}, t_{F_232}	Rise/fall time (receiver buffer output), V_{IO} = 3 to 5.5 V	C_L = 150 pF, See 图 6-18		20	50	ns
		C_L = 15 pF, See 图 6-18		5	10	ns
	Rise/fall time (receiver buffer output), V_{IO} = 1.65 to 2.75 V	C_L = 150 pF, See 图 6-18		40	90	ns
		C_L = 15 pF, See 图 6-18		10	20	ns
t_{en}	Output enable time	C_L = 150 pF, R_L = 3 kΩ, See 图 6-19		6	14	us
t_{dis}	Output disable time			100	200	ns
$t_{sk(p)}$	Pulse skew(3)	C_L = 150 pF, See 图 6-18		50	125	ns
		C_L = 15 pF, See 图 6-18		50	125	ns

(1) Test conditions are C1 – C4 = 0.1 μF atV_{CC} = 3.3 V ± 0.3 V; C1 = 0.047 μF, C2 – C4 = 0.33 μF atV_{CC} = 5 V ± 0.5 V.
(2) All typical values are at V_{CC} = 3.3 V orV_{CC} = 5 V, and T_A = 25°C.
(3) Pulse skew is defined as $|t_{PLH} - t_{PHL}|$ of each channel of the same device.

5.12 Switching Characteristics_MODE switching

Parameters over recommended operating conditions. All typical values are at 25°C and supply voltage of V_{CC} = 5 V , V_{IO} = 3.3 V, unless otherwise noted.

PARAMETER		TEST CONDITIONS	MIN	TYP	MAX	UNIT
t_{RDY}	Time from Shutdown to RS-232 ready	MODE2, MODE1, MODE0 = 000 or floating; $\overline{SHDN}$ = GND to V_{IO}; rest of logic input pins floating, V_{CC} = 4.5 V to 5.5 V Time from 50% of rising SHDN to charge pump V- supply reaching -8 V; See 图 6-11		0.05	0.1	ms
		MODE2, MODE1, MODE0 = 000 or floating; SHDN = GND to V_{IO}; rest of logic input pins floating, V_{CC} = 3 V to 3.6 V Time from 50% of rising SHDN to charge pump V- supply reaching -5 V; See 图 6-11		0.1	0.4	ms
t_{R2_R4}	Time to switch from RS-232 3T5R mode to RS-485 Full duplex mode	L3 = Vio, MODE2 = GND, MODE1 from GND to Vio, MODE0 = Vio; $\overline{SHDN}$ = DIR = V_{IO}; SLR, TERM_TX, TERM_RX= floating; Time from 50% of MODE1 rising edge to R2 reaching 2V; See 图 6-12		0.04	0.1	μs
t_{R4_R2}	Time to switch from RS-485 full dupplex mode to RS-232 3T5R mode	L3 = Vio, MODE2 = GND, MODE1 from Vio to GND, MODE0 = Vio; $\overline{SHDN}$ = DIR = V_{IO}; SLR, TERM_TX, TERM_RX= floating; Time from 50% of MODE1 falling edge to R2 reaching 300 mV; See 图 6-12		2	2.1	μs
t_{LP_RS232}	Time to switch from RS-232 loopback mode to normal RS-232 mode	MODE2 = MODE1 = GND, MODE0 from GND to V_{IO}; $\overline{SHDN}$ = V_{IO}, L3 = GND; Time from 50% of MODE0 rising edge to L2 50% rising edge, -40 ℃ ≤ T_A ≤ 85 ℃; See 图 6-13		2	2.4	μs
t_{RS232_LP}	Time to switch from normal RS-232 mode to RS-232 loopback mode	MODE2 = MODE1 = GND, MODE0 from V_{IO} to GND; $\overline{SHDN}$ = V_{IO}, L3 = GND; Time from 50% of MODE0 falling edge to L2 50% falling edge, -40 ℃ ≤ T_A ≤ 85 ℃; See 图 6-13		2	15	μs

Copyright © 2024 Texas Instruments Incorporated

5.12 Switching Characteristics_MODE switching（续）

Parameters over recommended operating conditions. All typical values are at 25°C and supply voltage of V_{CC} = 5 V , V_{IO} = 3.3 V, unless otherwise noted.

PARAMETER		TEST CONDITIONS	MIN	TYP	MAX	UNIT
t_{LP_RS485}	Time to switch from RS-485 loopback mode to RS-485 full duplex mode	MODE1 = MODE0 = V_{IO}; MODE2 from V_{IO} to GND; $\overline{SHDN}$ = V_{IO} , SLR, TERM_TX, TERM_RX= floating; L3 = GND, Time from 50% of MODE2 falling edge to 50% of rising L2; See 图 6-14		40	50	µs
t_{RS485_LP}	Time to switch from RS-485 full duplex mode to RS-485 loopback mode	MODE1 = MODE0 = V_{IO}; MODE2 from GND to V_{IO} ; $\overline{SHDN}$ = V_{IO} , SLR, TERM_TX, TERM_RX= floating; L3 = GND, Time from 50% of MODE2 rising edge to 50% of falling L2; See 图 6-14		1	2	µs
t_{FHD_RS485}	Time to switch from RS-485 full duplex to half duplex mode	DIR= V_{IO}, MODE2 = GND, MODE1 = V_{IO}; MODE0 from V_{IO} to GND ; $\overline{SHDN}$ = V_{IO} , SLR, TERM_TX, TERM_RX= floating; L3= GND, 10k pull down resistor on L2, Time from 50% of MODE0 falling edge to 50% falling edge on L2; See 图 6-15		0.5	1	µs
t_{HFD_RS485}	Time to switch from RS-485 half duplex to full duplex mode	DIR= V_{IO}, MODE2 = GND, MODE1 = V_{IO}; MODE0 from GND to V_{IO} ; $\overline{SHDN}$ = V_{IO} , SLR, TERM_TX, TERM_RX= floating; L3= GND, 10k pull down resistor on L2, Time from 50% of MODE0 rising edge to 50% rising edge on L2; See 图 6-15		0.5	1	µs

5.13 Switching Characteristics_RS-485_Termination resistor

Parameters over recommended operating conditions. All typical values are at 25°C and supply voltage of V_{CC} = 5 V , V_{IO} = 3.3 V, unless otherwise noted.

PARAMETER		TEST CONDITIONS	MIN	TYP	MAX	UNIT
t_{DTEN}	Driver terminal Termination resistor turn-on time	MODE2, MODE1, MODE0 = 011; V_{IO} = 3 to 3.6 V, DIR = GND, V_{R2R1} = 2 V, V_{R1} = 0 V; See 图 6-10		1000	2200	ns
t_{DTZ}	Driver terminal Termination resistor turn-off time	MODE2, MODE1, MODE0 = 011; V_{IO} = 3 to 3.6 V, DIR = GND, V_{R2R1} = 2 V, V_{R1} = 0 V; See 图 6-10		2000	7200	ns
t_{RTEN}	Receiver terminal Termination resistor turn-on time	MODE2, MODE1, MODE0 = 011; V_{IO} = 3 to 3.6 V, V_{R3R4} = 2 V, V_{R4} = 0 V; See 图 6-10		1000	2200	ns
t_{RTZ}	Receiver terminal Termination resistor turn-off time	MODE2, MODE1, MODE0 = 011; V_{IO} = 3 to 3.6 V, V_{R3R4} = 2 V, V_{R4} = 0 V; See 图 6-10		2000	7200	ns

5.14 Switching Characteristics_Loopback mode

Parameters over recommended operating conditions. All typical values are at 25°C and supply voltage of V_{CC} = 5 V , V_{IO} = 3.3 V, unless otherwise noted.

PARAMETER		TEST CONDITIONS	MIN	TYP	MAX	UNIT
$t_{LB_RS232_rising}$	Delay from Logic input rising edge to logic output rising edge in RS-232 Loopback mode	MODE2 = X, MODE1, MODE0 = GND; SLR = GND, Delay from 50% of L3/L4/L6 rising edge to 50% L2/L1/L5, L7, L8 rising edge, $\overline{SHDN}$ = Vio, TERM_TX and TERM_RX float, Load capacitance on output buffers = 15 pF, R_L on all 3 driver outputs = 3kΩ, -40 ℃ ≤ T_A ≤ 85 ℃		410	920	ns
		MODE2 = X, MODE1, MODE0 = GND; SLR = Vio, Delay from 50% of L3/L4/L6 rising edge to 50% L2/L1/L5, L7, L8 rising edge, $\overline{SHDN}$ = Vio, TERM_TX and TERM_RX float, Load capacitance on output buffers = 15 pF, R_L on all 3 driver outputs = 3kΩ, -40 ℃ ≤ T_A ≤ 85 ℃		640	1100	ns
$t_{LB_RS232_falling}$	Delay from Logic input falling edge to logic output falling edge in RS-232 Loopback mode	MODE2 = X, MODE1, MODE0 = GND; SLR = GND, Delay from 50% of L3/L4/L6 falling edge to 50% L2/L1/L5, L7, L8 falling edge, $\overline{SHDN}$ = Vio, TERM_TX and TERM_RX float, Load capacitance on output buffers = 15 pF, R_L on all 3 driver outputs = 3kΩ, -40 ℃ ≤ T_A ≤ 85 ℃		570	760	ns
		MODE2 = X, MODE1, MODE0 = GND; SLR = Vio, Delay from 50% of L3/L4/L6 falling edge to 50% L2/L1/L5, L7, L8 falling edge, $\overline{SHDN}$ = Vio, TERM_TX and TERM_RX float, Load capacitance on output buffers = 15 pF, R_L on all 3 driver outputs = 3kΩ, -40 ℃ ≤ T_A ≤ 85 ℃		600	1460	ns

Copyright © 2024 Texas Instruments Incorporated

5.14 Switching Characteristics_Loopback mode（续）

Parameters over recommended operating conditions. All typical values are at 25°C and supply voltage of V_{CC} = 5 V , V_{IO} = 3.3 V, unless otherwise noted.

PARAMETER		TEST CONDITIONS	MIN	TYP	MAX	UNIT
$t_{SKEW_RS232_LB}$	Pulse skew from logic input to logic output in RS232 loopback mode	$\lvert t_{LB_RS232_rising} - t_{LB_RS232_falling} \rvert$, SLR = Vio, -40 ℃ ≤ T_A ≤ 85 ℃		100	860	ns
		$\lvert t_{LB_RS232_rising} - t_{LB_RS232_falling} \rvert$, SLR = GND, -40 ℃ ≤ T_A ≤ 85 ℃		70	250	ns
$t_{LB_RS485_rising}$	Delay from Logic input rising edge to logic output rising edge in RS-485 Loopback mode	MODE2 = MODE1 = MODE0 = Vio; SLR = Vio, Delay from 50% of L3 rising edge to 50% L2 rising edge, $\overline{SHDN}$ = Vio, TERM_TX and TERM_RX float, Load cap on L2 = 15 pF, Load on Driver output terminals (R2-R1) = 54 Ω		1060	1770	ns
$t_{LB_RS485_falling}$	Delay from Logic input falling edge to logic output falling edge in RS-485 Loopback mode	MODE2 = MODE1 = MODE0 = Vio; SLR = Vio, Delay from 50% of L3 falling edge to 50% L2 falling edge, $\overline{SHDN}$ = Vio, TERM_TX and TERM_RX float, Load cap on L2 = 15 pF, Load on Driver output terminals (R2-R1) = 54 Ω		1060	1770	ns
$t_{SKEW_RS485_LB}$	Pulse skew from logic input to logic output in RS485 loopback mode	$\lvert t_{LB_RS485_rising} - t_{LB_RS485_falling} \rvert$, SLR = Vio		5	50	ns

Copyright © 2024 Texas Instruments Incorporated

5.15 Typical Characteristics

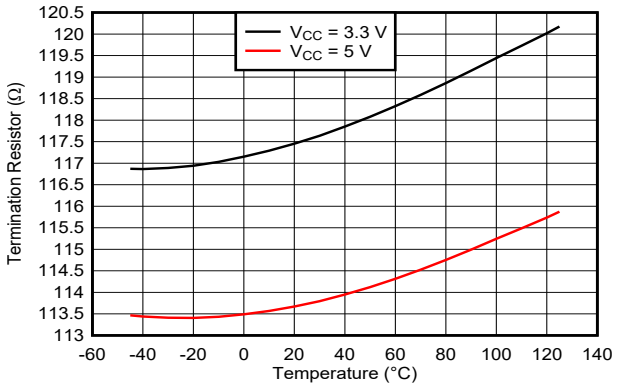

RS-485 Full Duplex mode V(R3-R4) = 2V

图 5-1. RS-485 Termination Resistor vs Temperature

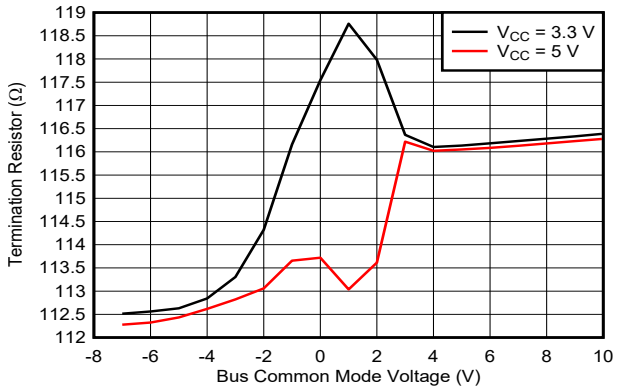

RS-485 Full Duplex mode V(R3-R4) = 2V

图 5-2. Termination Resistor vs Bus Common Mode Voltage

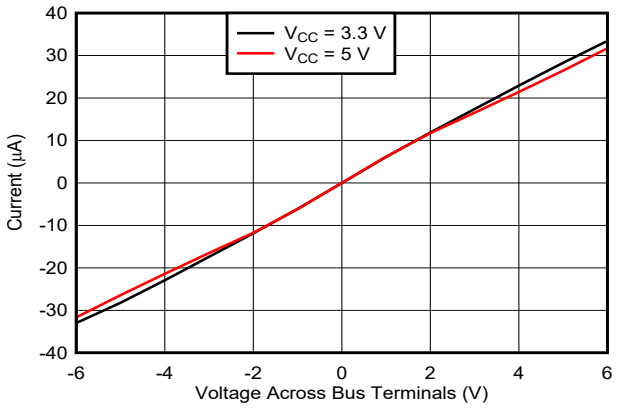

TERM_TX = GND DIR = GND T_A = 25°C

图 5-3. Voltage vs Current across R2-R1 Bus Pins with Termination OFF

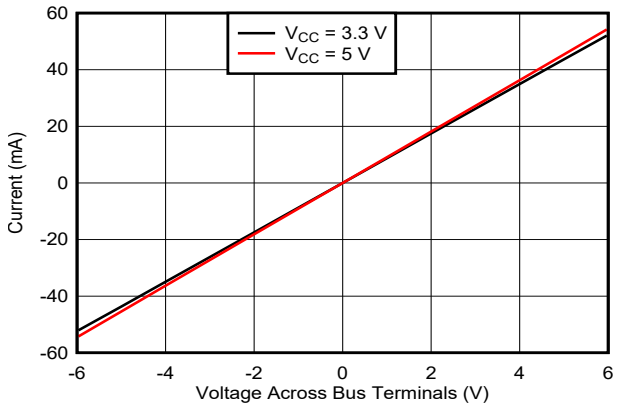

TERM_TX = V_{IO} DIR = GND T_A = 25°C

图 5-4. Voltage vs Current across R2-R1 Bus Pins with Termination ON

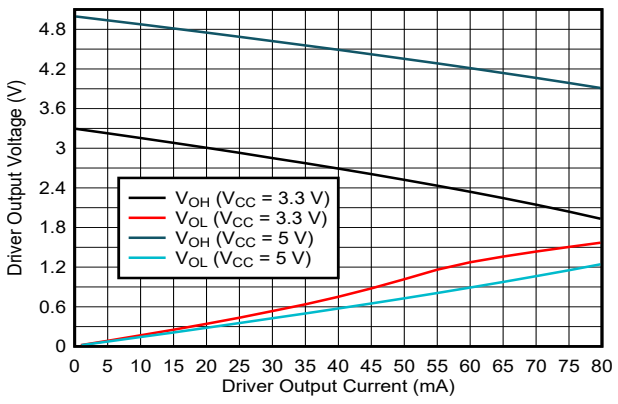

DIR = V_{IO} T_A = 25°C

图 5-5. RS-485 Driver Output Voltage vs Driver Output Current

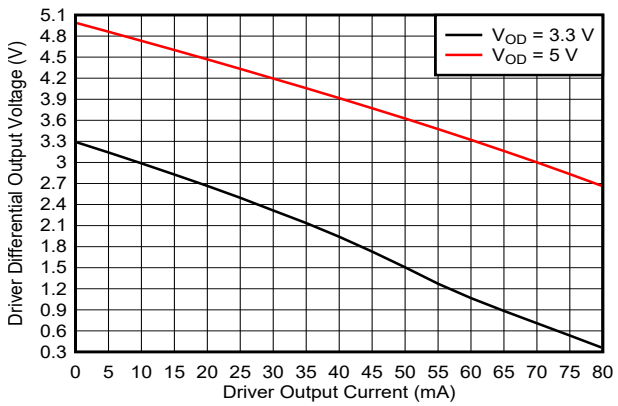

DIR = V_{IO} T_A = 25°C

图 5-6. RS-485 Driver Differential Output Voltage vs Driver Output Current

Copyright © 2024 Texas Instruments Incorporated

5.15 Typical Characteristics (continued)

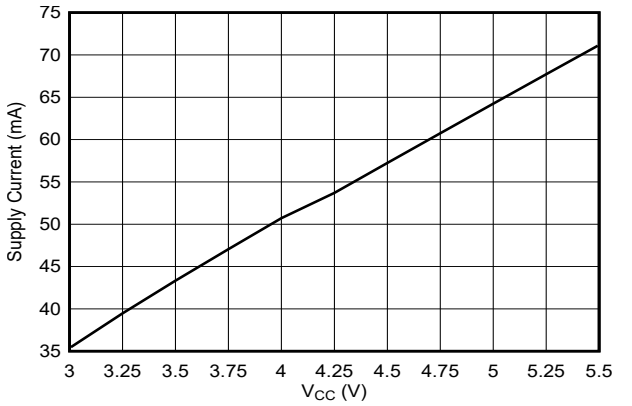

T_A = 25°C R_L = 54 Ω DIR = L3 = V_{IO}
RS-485 Full Duplex mode

图 5-7. RS-485 Supply Current vs Supply Voltage

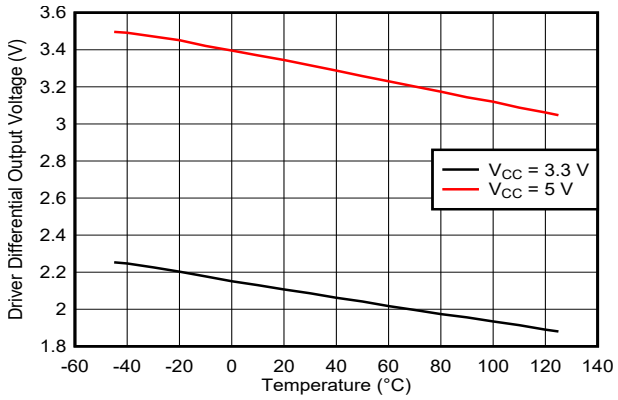

DIR = L3 = V_{IO} R_L = 54 Ω
RS-485 Full Duplex mode

图 5-8. RS-485 Driver Differential Output Voltage vs Temperature

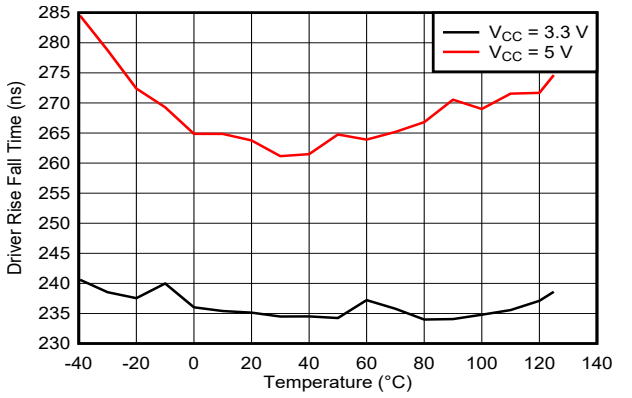

Bus Load = 54 Ω || 50pF SLR = V_{IO} DIR = V_{IO}

图 5-9. RS-485 500kbps Driver Rise or Fall Time vs Temperature

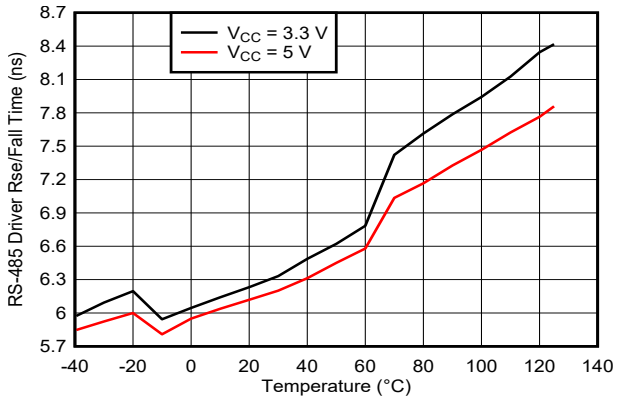

Bus Load = 5 Ω || 50pF SLR = GND DIR = V_{IO}

图 5-10. RS-485 20Mbps Driver Rise or Fall Time vs Temperature

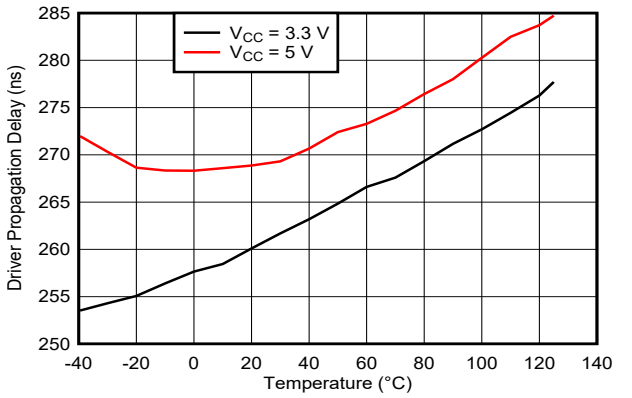

Bus Load = 54 Ω || 50pF SLR = V_{IO} DIR = V_{IO}

图 5-11. RS-485 500kbps Driver Propagation Delay vs Temperature

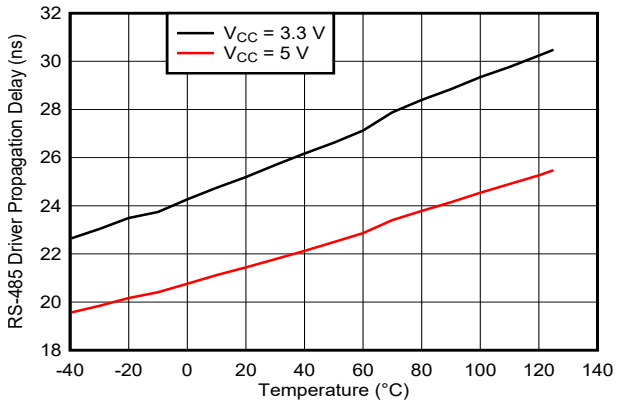

Bus Load = 54 Ω || 50pF SLR = GND DIR = V_{IO}

图 5-12. RS-485 20Mbps Driver Propagation Delay vs Temperature

Copyright © 2024 Texas Instruments Incorporated

5.15 Typical Characteristics (continued)

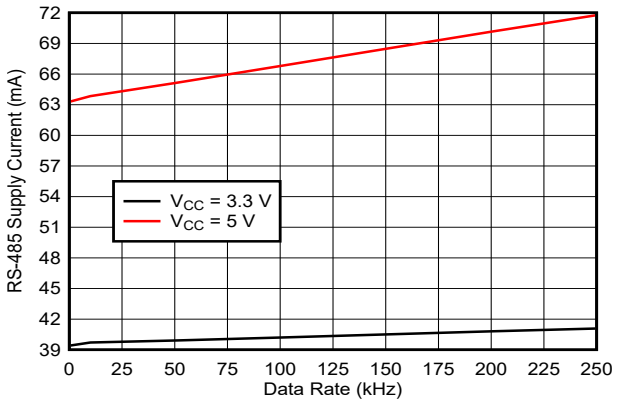

T_A = 25°C R_L = 54 Ω DIR = V_{IO}

图 5-13. RS-485 500kbps Supply Current vs Signaling Rate

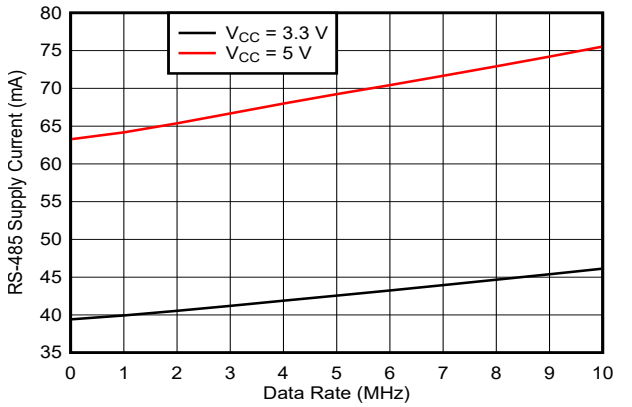

T_A = 25°C R_L = 54 Ω DIR = V_{IO}

图 5-14. RS-485 20Mbps Supply Current vs Signaling Rate

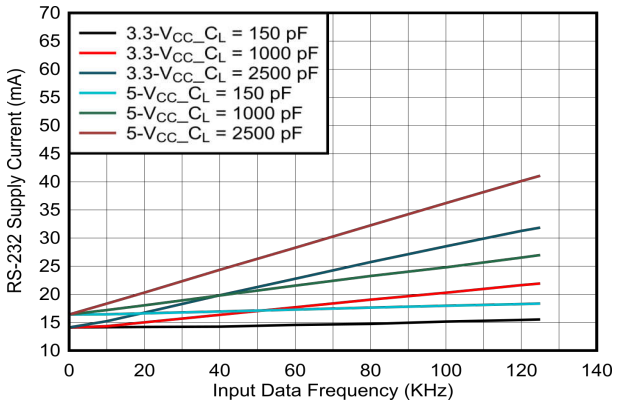

T_A = 25°C SLR = V_{IO}

All 3 drivers loaded with 5kΩ ; device in RS-232 3T5R mode

L4, L6 = static L3 toggling

图 5-15. RS-232 Supply Current vs Signaling Rate for 250kbps Mode

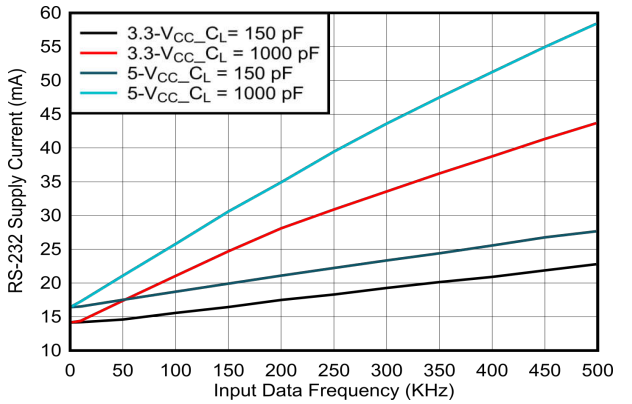

T_A = 25°C SLR = GND

All 3 drivers loaded with 5kΩ ; device in RS-232 3T5R mode

L4, L6 = static L3 toggling

图 5-16. RS-232 Supply Current vs Signaling Rate for 1Mbps Mode

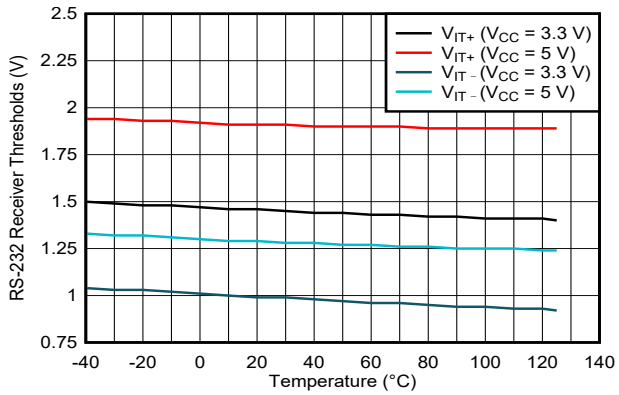

图 5-17. RS-232 Receiver Thresholds vs Temperature

Copyright © 2024 Texas Instruments Incorporated

6 Parameter Measurement Information

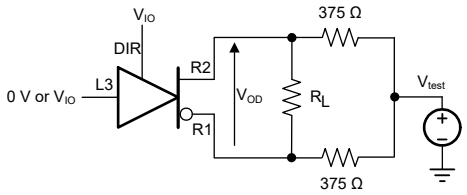

图 6-1. Measurement of RS-485 Driver Differential Output Voltage With Common-Mode Load

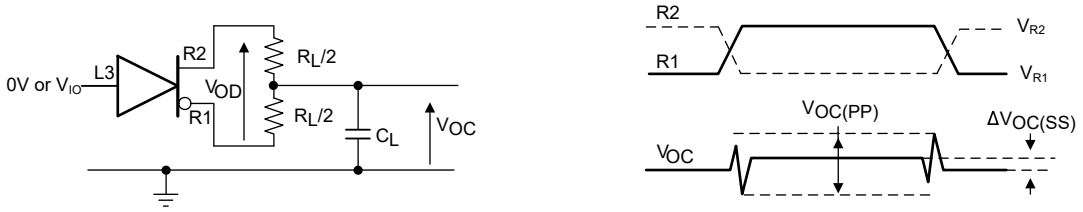

图 6-2. Measurement of RS-485 Driver Differential and Common-Mode Output With RS-485 Load

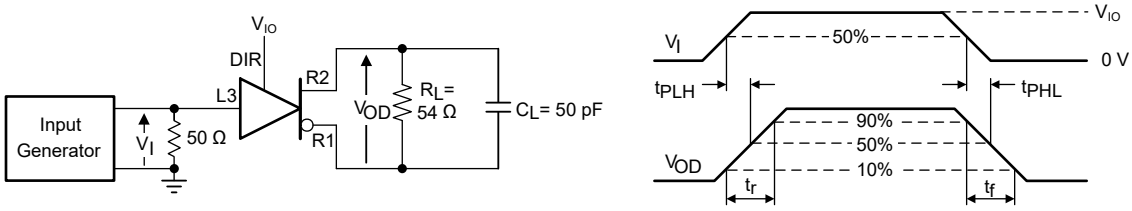

图 6-3. Measurement of RS-485 Driver Differential Output Rise and Fall Times and Propagation Delays

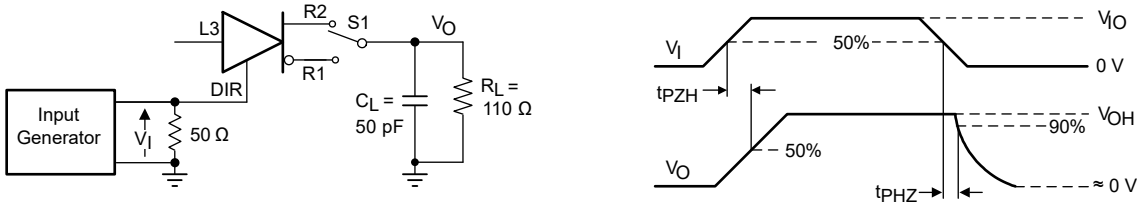

图 6-4. Measurement of RS-485 Driver Enable and Disable Times With Active High Output and Pull-Down Load

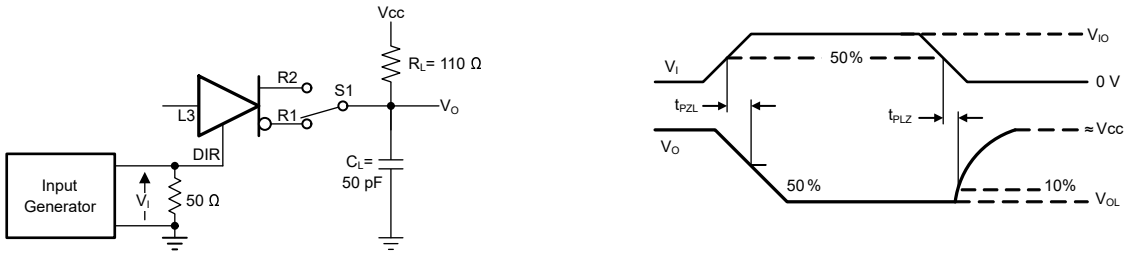

图 6-5. Measurement of RS-485 Driver Enable and Disable Times With Active Low Output and Pull-up Load

Copyright © 2024 Texas Instruments Incorporated

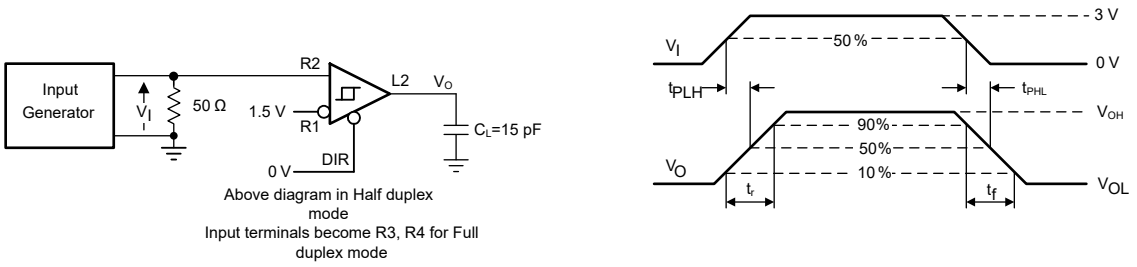

图 6-6. Measurement of RS-485 Receiver Output Rise and Fall Times and Propagation Delays

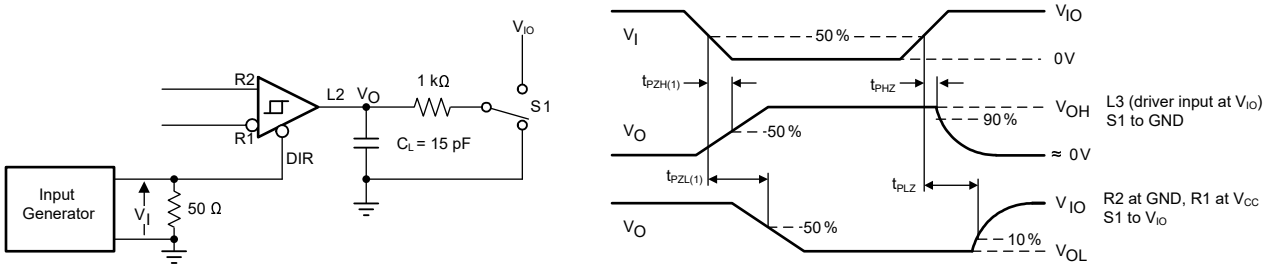

图 6-7. Measurement of RS-485 Receiver Enable and Disable Times in Half Duplex Mode

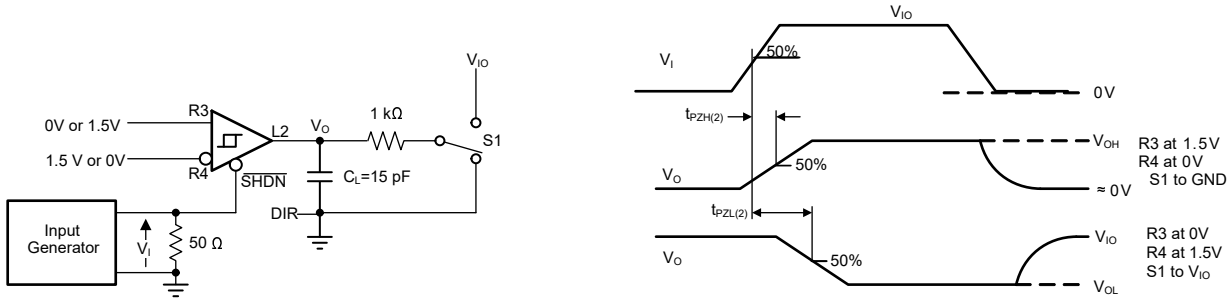

图 6-8. Measurement of RS-485 Receiver Enable Time from Shutdown with TX Disabled: Full Duplex Mode

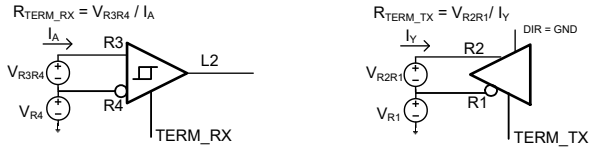

图 6-9. Termination Resistor Measurement

Copyright © 2024 Texas Instruments Incorporated

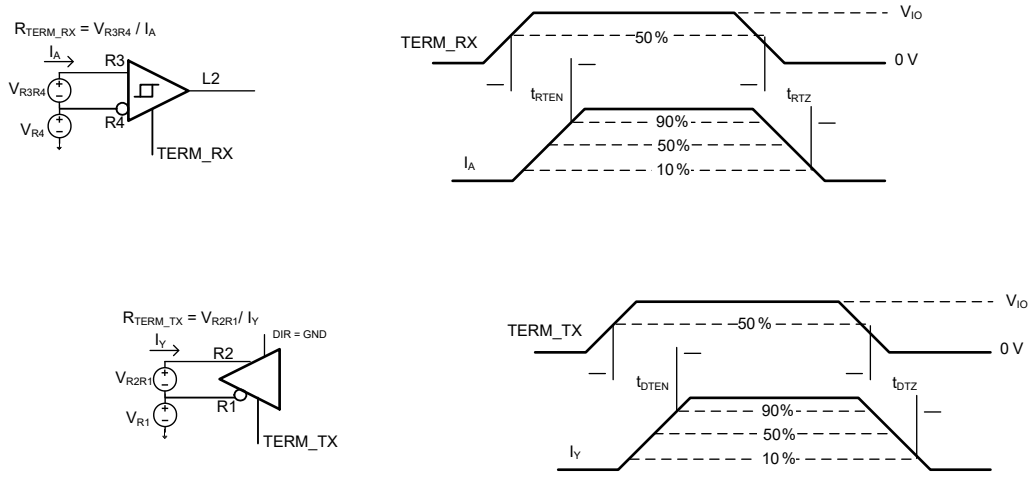

图 6-10. Termination Resistor Switching Measurement

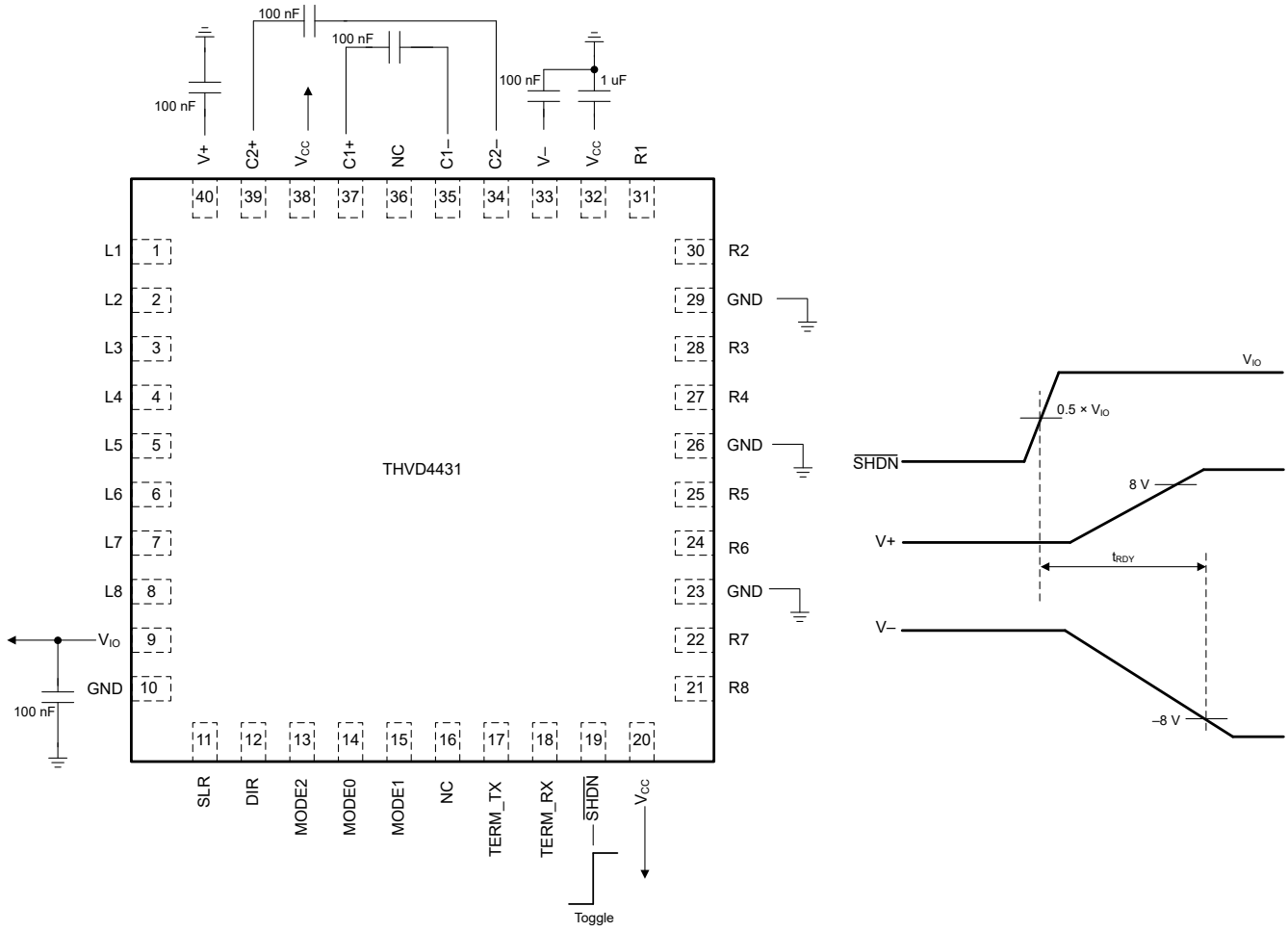

图 6-11. Time from Shutdown to RS-232 Ready

Copyright © 2024 Texas Instruments Incorporated

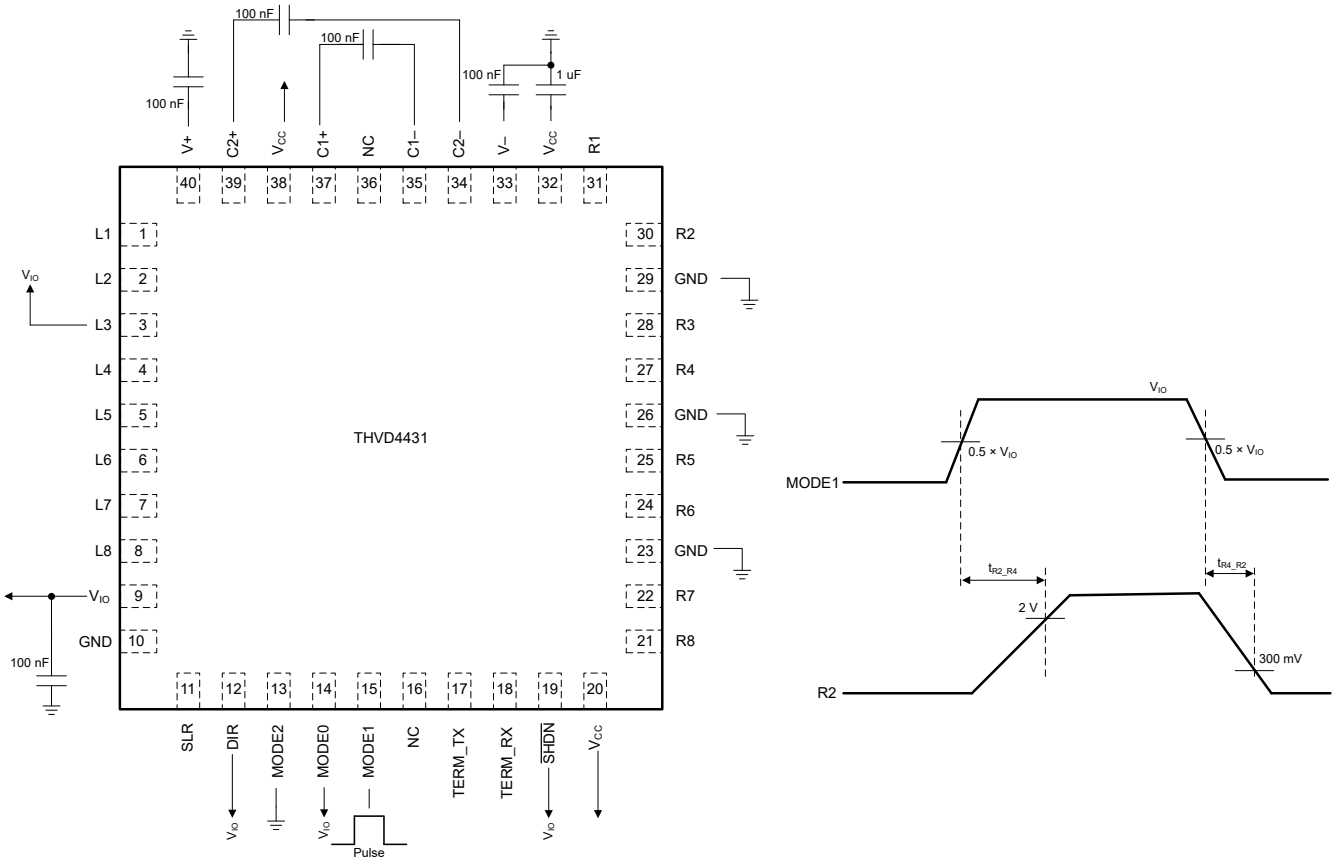

图 6-12. Time to Switch from RS-232 3T5R Mode to RS-485 Full Duplex Mode and Back

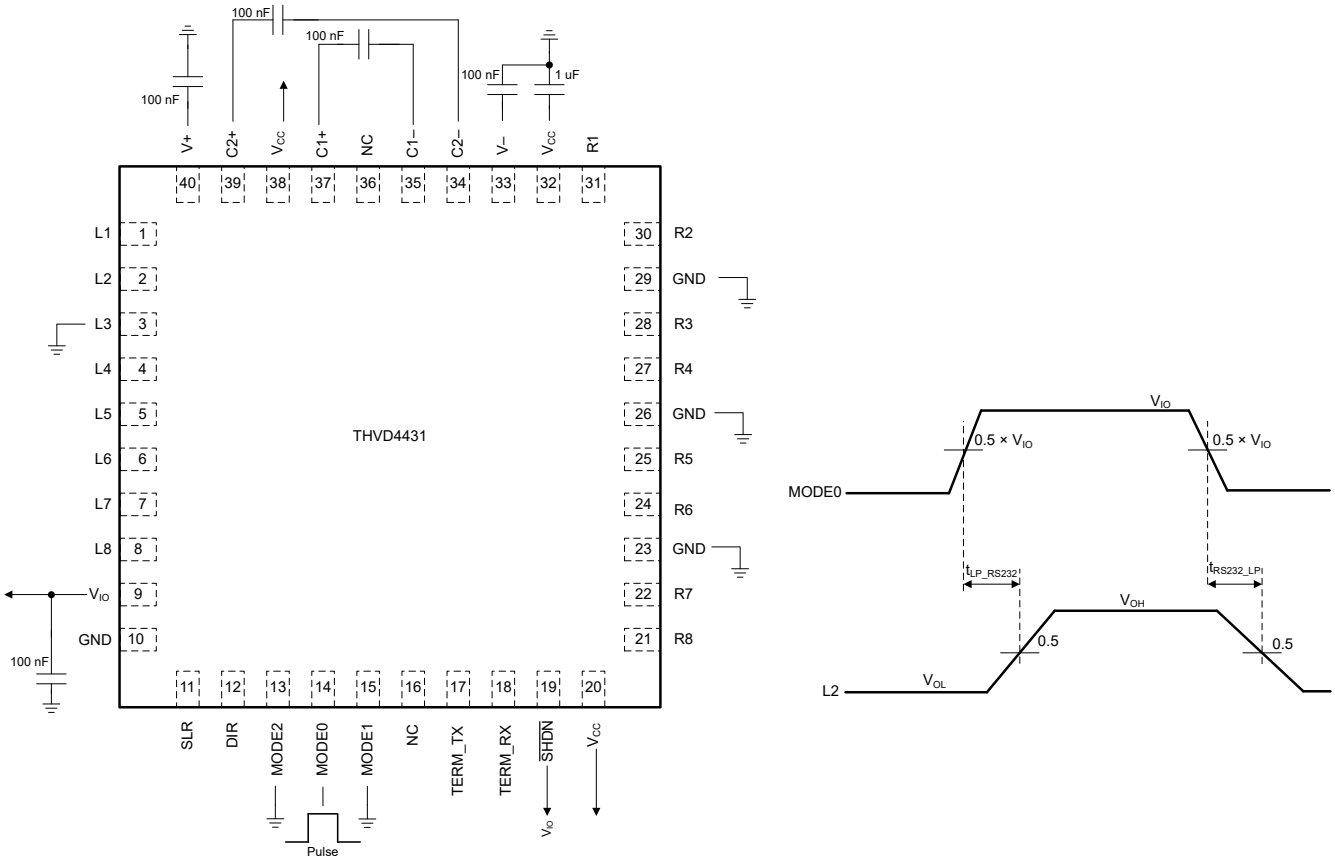

图 6-13. Time to Switch from RS-232 Loopback to Normal RS-232 3T5R Mode and Back

Copyright © 2024 Texas Instruments Incorporated

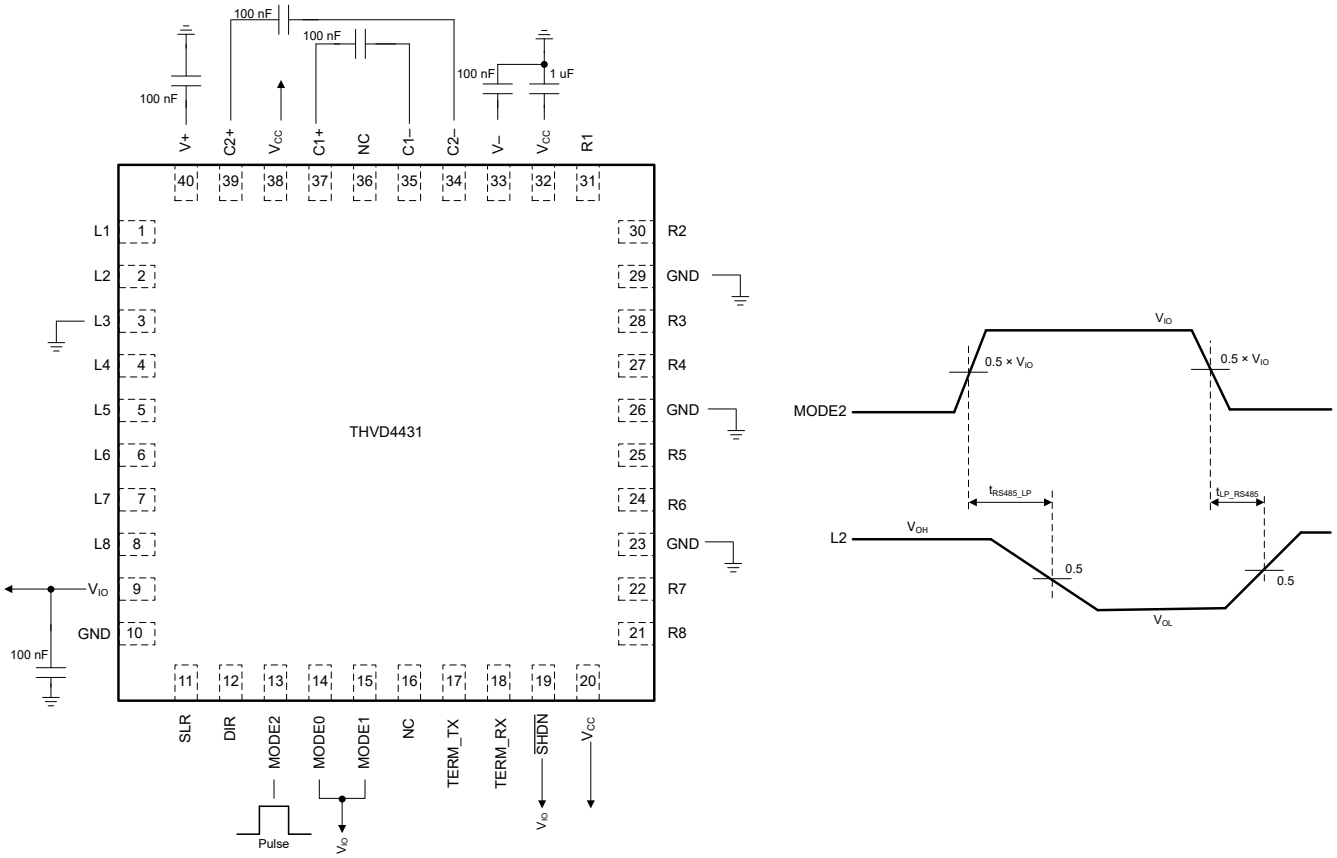

图 6-14. Time to Switch from RS-485 Loopback Mode to RS-485 Full Duplex Mode and Back

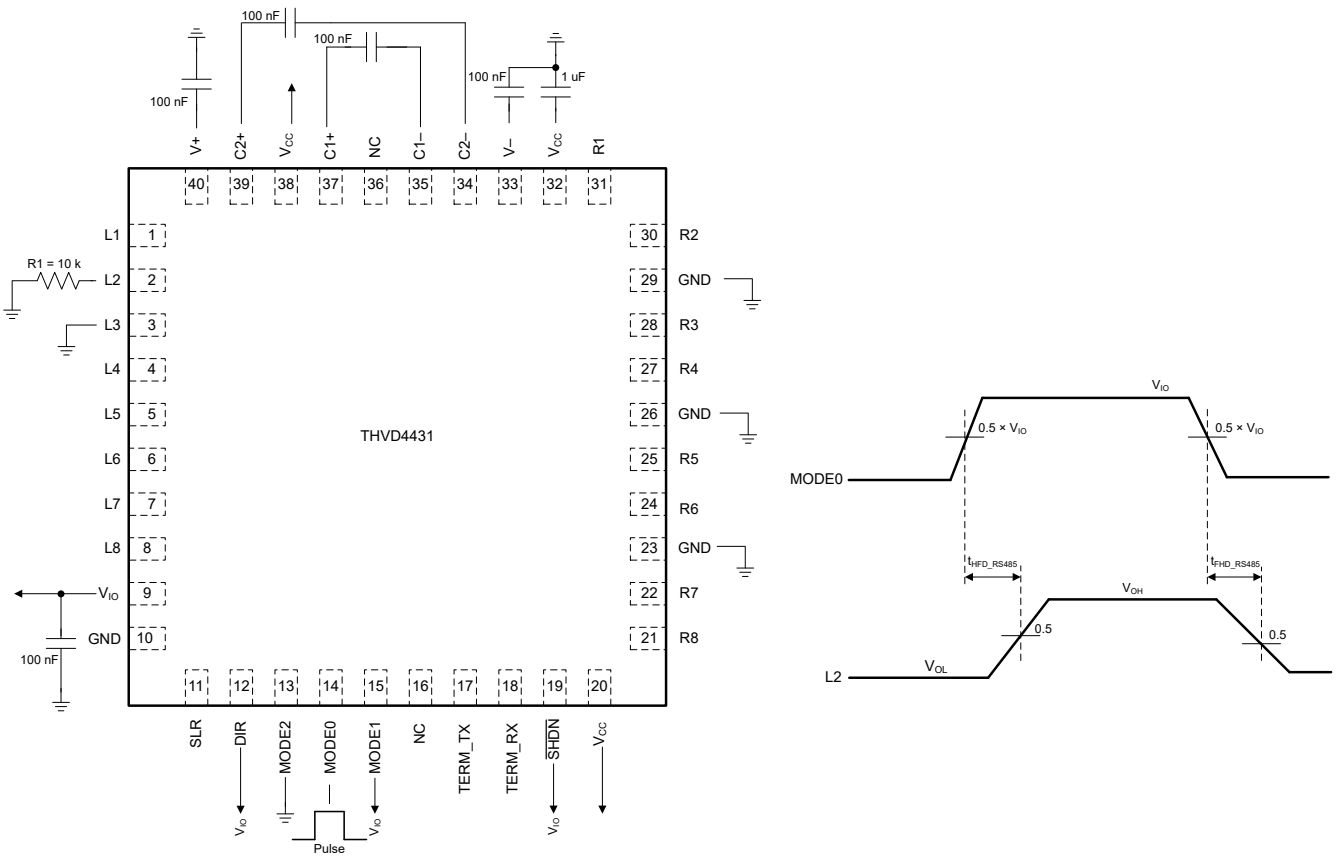

图 6-15. Time to Switch from RS-485 Full Duplex to Half Duplex and Back

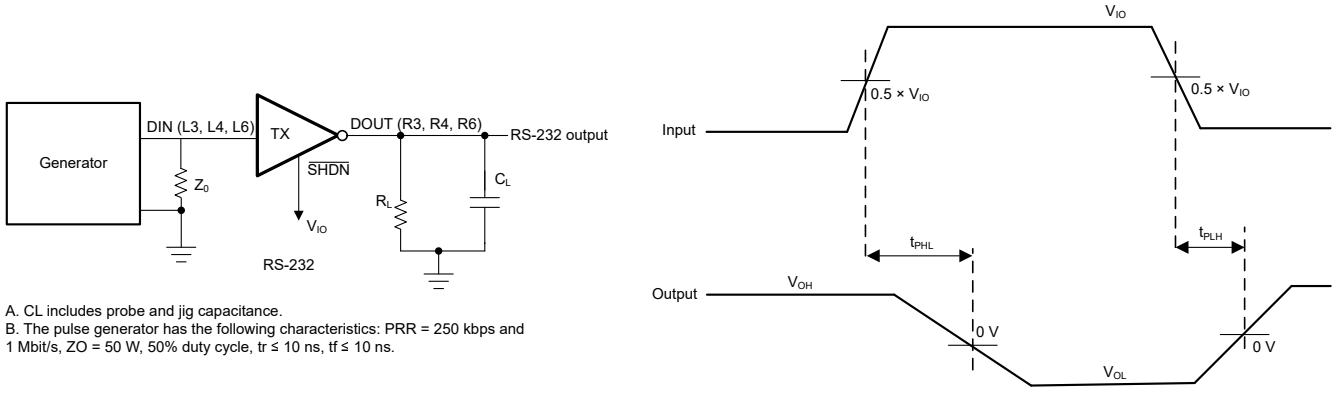

A. CL includes probe and jig capacitance.
B. The pulse generator has the following characteristics: PRR = 250 kbps and 1 Mbit/s, ZO = 50 W, 50% duty cycle, tr ≤ 10 ns, tf ≤ 10 ns.

图 6-16. RS-232 Driver Prop Delay, Pulse Skew

Copyright © 2024 Texas Instruments Incorporated

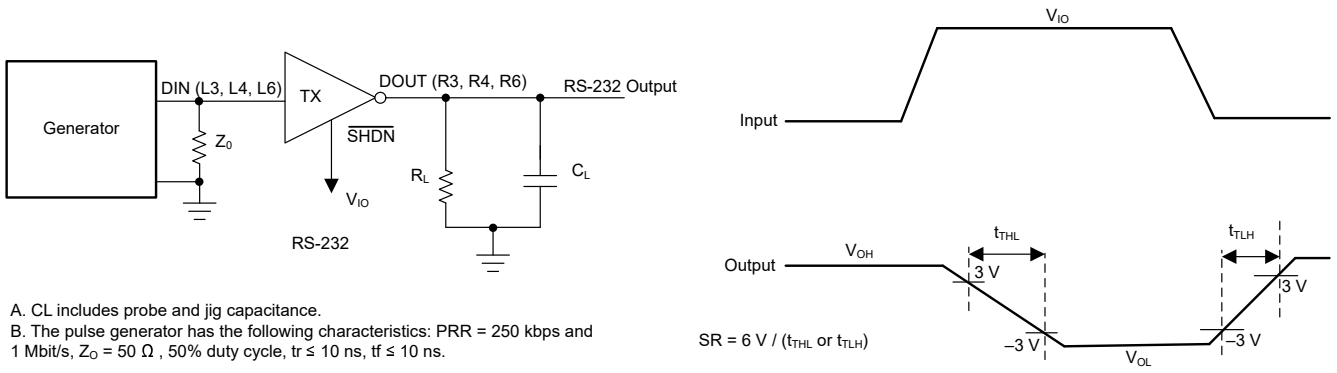

A. CL includes probe and jig capacitance.
B. The pulse generator has the following characteristics: PRR = 250 kbps and 1 Mbit/s, Z_O = 50 Ω , 50% duty cycle, tr ≤ 10 ns, tf ≤ 10 ns.

图 6-17. RS-232 Driver Slew Rate

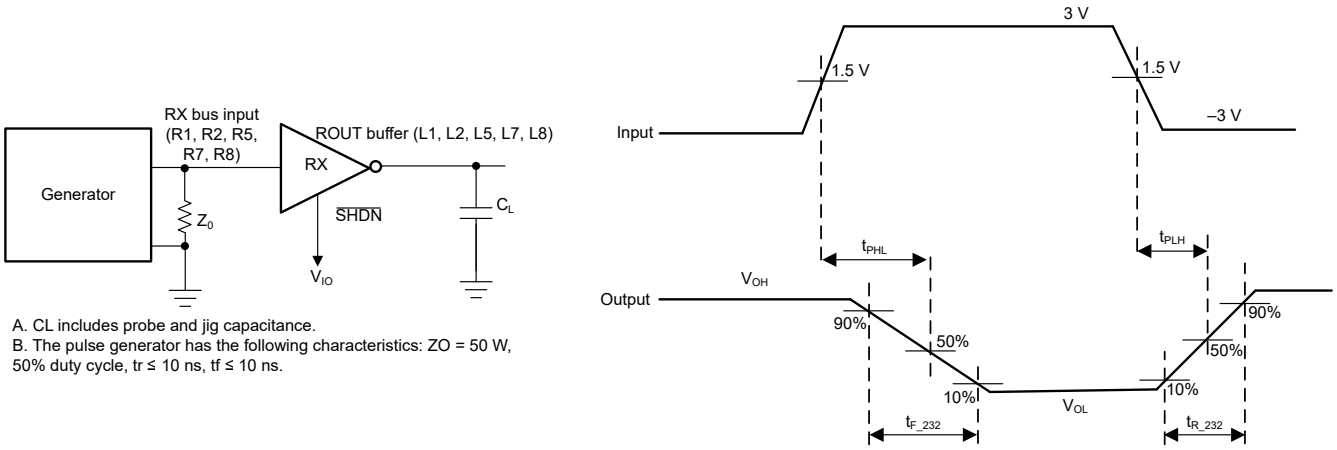

A. CL includes probe and jig capacitance.
B. The pulse generator has the following characteristics: ZO = 50 W, 50% duty cycle, tr ≤ 10 ns, tf ≤ 10 ns.

图 6-18. RS-232 Receiver Propagation Delay, Pulse Skew

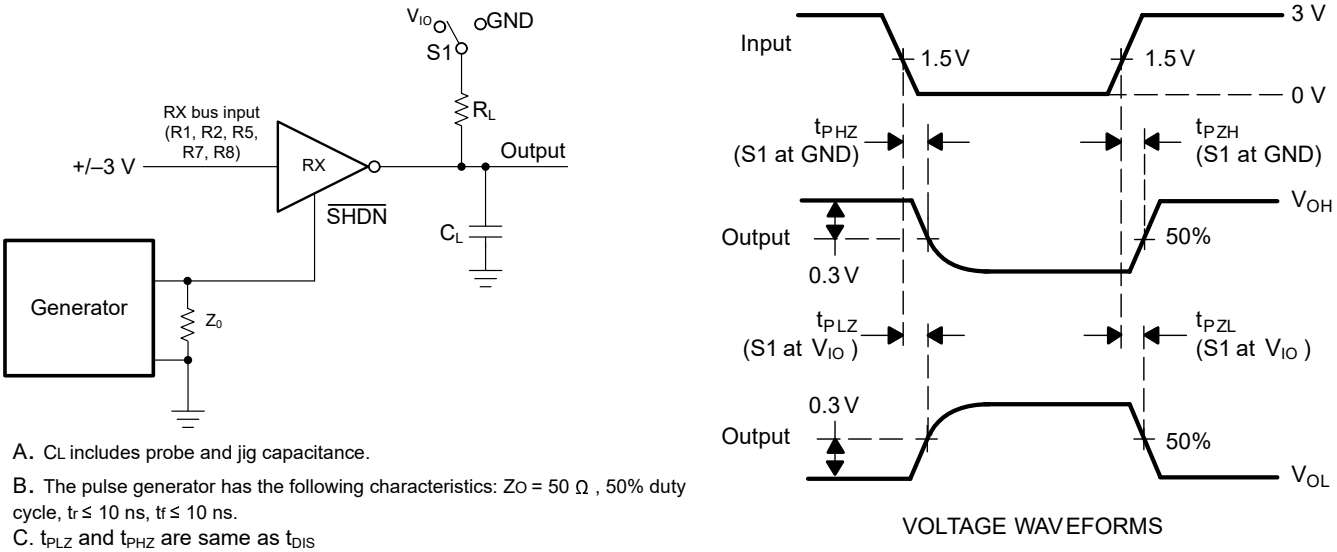

A. CL includes probe and jig capacitance.
B. The pulse generator has the following characteristics: ZO = 50 Ω , 50% duty cycle, tr ≤ 10 ns, tf ≤ 10 ns.
C. t_{PLZ} and t_{PHZ} are same as t_{DIS}
D. t_{PZL} and t_{PZH} are same as t_{EN}

图 6-19. RS-232 Receiver Enable and Disable Time

Copyright © 2024 Texas Instruments Incorporated

7 Detailed Description

7.1 Overview

THVD4431 is a highly integrated and robust multiprotocol transceiver supporting RS-232, RS-422 and RS-485 physical layers. The device has three transmitters and five receivers to enable 3T5R RS-232 port. Device also integrates one transmitter and one receiver to enable half and full duplex RS-485 port. MODE selection pins enable shared bus and logic pins for the protocols to share a common single connector.

The device has SLR pin which allows it to be used for two different maximum speed settings for RS-232 and for RS-485. This is beneficial as customers can qualify one device and use it in two separate end-applications. The devices also have flexible I/O supply pin V_{IO} which enables digital interface voltage range, from 1.65V to 5.5V, different from bus voltage supply 3V to 5.5V.

7.2 Functional Block Diagrams

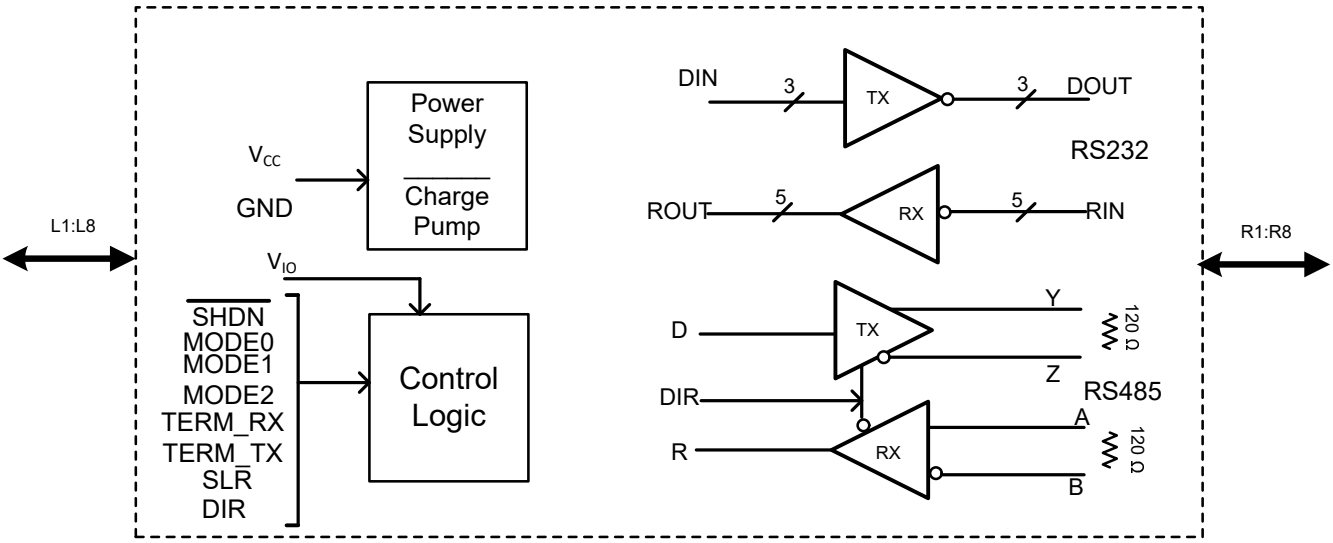

图 7-1. THVD4431 Block Diagram

7.3 Feature Description

7.3.1 Integrated IEC ESD and EFT Protection

Internal ESD protection circuits protect all the transceiver bus pins (driver and receiver) against electrostatic discharges (ESD) according to IEC 61000-4-2 up to ±8 kV for contact discharge and ±15 kV for air discharge for all operating modes. Bus lines in RS-485 mode can also withstand electrical fast transients (EFT) according to IEC 61000-4-4 for up to ±4 kV.

7.3.2 Protection Features

The THVD4431 bus pins are protected against any DC supply shorts in the range of -16 V to +16 V. In the RS-485 mode, the short circuit current is limited to ±250 mA to comply with the TIA/EIA-485A standard. In RS-232 mode, current limiting of ±60 mA is applicable for scenarios where bus pins can short to ground.

The device also features thermal shutdown protection that disables the driver and the receiver if the junction temperature exceeds the T_{SHDN} threshold due to excessive power dissipation on-chip.

Supply undervoltage protection is present on both V_{CC} and V_{IO} supplies. This maintains the bus output and receiver logic output in known driven state when both the supplies are above their rising undervoltage thresholds. Table below describes the device behavior in various scenarios of supply levels.

Copyright © 2024 Texas Instruments Incorporated

表 7-1. Supply Function Table

V_{CC}	V_{IO}	Driver Output	Receiver Output
> $UV_{VCC(rising)}$	> $UV_{VIO(rising)}$	For RS-485 mode, determined by DIR and L3 inputs. For RS-232 mode, determined by L3, L4, L6 inputs. For shutdown mode, Hi-Z	For RS-485 mode, determined by DIR and (R1-R2) or (R3-R4) inputs. For RS-232 mode, determined by R1, R2, R5, R7, R8 inputs. For shutdown mode, Hi-Z
< $UV_{VCC(falling)}$	> $UV_{VIO(rising)}$	High impedance	Undetermined
> $UV_{VCC(rising)}$	< $UV_{VIO(falling)}$	High impedance	High impedance
< $UV_{VCC(falling)}$	< $UV_{VIO(falling)}$	High impedance	High impedance

7.3.3 RS-485 Receiver Fail-Safe Operation

The RS-485 differential receiver of the THVD4431 is *failsafe* to invalid bus states caused by the following:

- Open bus conditions, such as a disconnected connector
- Shorted bus conditions, such as cable damage shorting the twisted-pair together
- Idle bus conditions that occur when no driver on the bus is actively driving

In any of these cases, the differential receiver outputs a failsafe logic high state so that the output of the receiver is not indeterminate.

Receiver failsafe is accomplished by offsetting the receiver thresholds such that the *input indeterminate* range does not include zero volts differential. To comply with the RS-422 and RS-485 standards, the receiver output must output a high when the differential input V_{ID} is more positive than 200 mV, and must output a low when V_{ID} is more negative than –200 mV. The receiver parameters which determine the failsafe performance are V_{TH+}, V_{TH-}, and V_{HYS} (the separation between V_{TH+} and V_{TH-}). As shown in the *Receiver Function table*, differential signals more negative than –200 mV always causes a low receiver output, and differential signals more positive than 200 mV always causes a high receiver output.

When the differential input signal is close to zero, it is still above the V_{TH+} threshold, and the receiver output is high. Only when the differential input is more than V_{HYS} below V_{TH+} does the receiver output transition to a low state. Therefore, the noise immunity of the receiver inputs during a bus fault conditions includes the receiver hysteresis value, V_{HYS}, as well as the value of V_{TH+}.

7.3.4 Low-Power Shutdown Mode

Driving the $\overline{SHDN}$ pin low puts the device into the shutdown mode. This is the lowest power mode of the device and current consumption is 10 uA typical. All the blocks get disabled in this mode.

Copyright © 2024 Texas Instruments Incorporated

7.3.5 On-chip Switchable Termination Resistor

THVD4431 has 2 termination resistors of nominal 120 Ω, one across R1/R2 and another across R3/R4 in RS-485 mode. Both termination resistors are enabled or disabled using pins as described in 表 7-2. Both the termination resistors can be enabled or disabled independent of the state of driver or receiver. Termination is OFF in RS-232 loopback, RS-232 3T5R, RS-485 loopback, unpowered and thermal shutdown modes.

表 7-2. On-chip Termination Function

Signal state	Device mode	Function	Comments
TERM_TX = V_{IO}	Full duplex mode	120 Ω enabled between R1 and R2	Termination between R1/R2 is disabled by default
TERM_TX = GND or floating	Full duplex mode	120 Ω disabled between R1 and R2	
TERM_RX = V_{IO}	Full duplex mode	120 Ω enabled between R3 and R4	Termination between R3/R4 is disabled by default
TERM_RX = GND or floating	Full duplex mode	120 Ω disabled between R3 and R4	
TERM_RX = X, TERM_TX = V_{IO}	Half duplex mode	120 Ω enabled between R1 and R2	In half duplex mode, TERM_RX is don't care and TERM_TX has higher priority
TERM_RX = X, TERM_TX = GND	Half duplex mode	120 Ω disabled between R1 and R2	

The on-chip 120 Ω termination resistor is designed for minimum variation across temperature and across common mode voltage on bus pins. The termination block offers a resistive load to the bus, and does not alter the magnitude or phase of the bus signals from DC to 20Mbps signaling. See the typical characteristic curves for variation of termination resistor with voltage and temperature.

7.3.6 Operational Data Rate

THVD4431 can be used in slow speed or fast speed RS-485 and RS-232 applications by configuring Slew rate control (SLR) pin. 表 7-3 describes slew rate control function.

表 7-3. Slew Rate Control Function

Signal state	Driver	Receiver	Comment
SLR = V_{IO}	Maximum speed of operation for RS-485 = 500kbps. Maximum speed of operation in RS-232 mode is 250kbps	Maximum speed of operation for RS-485 = 500kbps. Maximum speed of operation in RS-232 mode is 250kbps	Active high slew rate limiting applied on driver output. In this configuration, glitch filter in receiver path for RS-485 is enabled
SLR = GND or floating	Maximum speed of operation for RS-485= 20Mbps. Maximum speed of operation in RS-232 mode is 1Mbps	Maximum speed of operation for RS-485 = 20Mbps. Maximum speed of operation in RS-232 mode is 1Mbps	Slew rate limiting on driver output disabled.

For RS-485 half and full duplex modes, receiver path in the slow speed mode (500 kbps) provides additional noise filtering. To attenuate high frequency noise pulses from the bus which can be wrongly interpreted as valid data, SLR = V_{IO} enables a low pass filter to filter out pulses with frequency higher than typical 700 kHz.

7.3.7 Diagnostic Loopback

THVD4431 provides complete path diagnostic loopback modes for both RS-232 and RS-485. These modes internally short bus outputs to bus inputs. So, if data is toggled from logic input, data reaches bus and is reflected back on logic buffer output. This enables MCU to detect bus side short (due to connector/cable) by comparing logic input and logic output.

In RS-232 loopback mode, L3 reflects on L2/R2/R3; L4 reflects on L1/R4/R1; L6 reflects on L5, L7, L8, R5, R6, R7 and R8 enabling to detect short to ground on all bus pins from R1 through R8. RS-232 loopback mode is optimized for -40°C to 85°C ambient temperature. RS-232 diagnostic loopback can be performed on a node (DUT1) even with another node (DUT2) connected via cable, but listening node (DUT2) is not allowed to transmit anything on the RS232 lines while loopback check by DUT1 is ongoing.

Copyright © 2024 Texas Instruments Incorporated

In RS-485 loopback mode, internally R2 gets connected to R3 and R1 gets connected to R4. L3 input data is routed to driver output terminals and receiver input terminals and reflects on L2. DIR and TERM_RX are not supported in this mode. Specific to this mode, external termination on R3/R4 is not supported, but R1/R2 can have internal or external termination. This is able to detect short between R1/R2 and between R3/R4 bus terminals. Recommended maximum data rate for RS-485 diagnostic loopback to detect cable or connector shorts is 500kbps with SLR = V_{IO}.

7.3.8 Integrated Charge pump for RS-232

THVD4431 has integrated high-efficiency and low-noise charge pump to generate large output voltages for RS-232 signals. Charge pump consists of a voltage doubler and an inverter to regulate the voltage to nominal ± 5.5 V or to ±9.5 V for 3.3 V or 5-V V_{CC} operation respectively. Charge pump needs four external ceramic capacitors (2 flying capacitors and 2 storage capacitors) and allows for single supply operation for RS-232. For a generic description of RS-232 charge pump operation, please refer to the blog: How the RS-232 transceiver's regulated charge-pump circuitry works.

7.4 Device Functional Modes

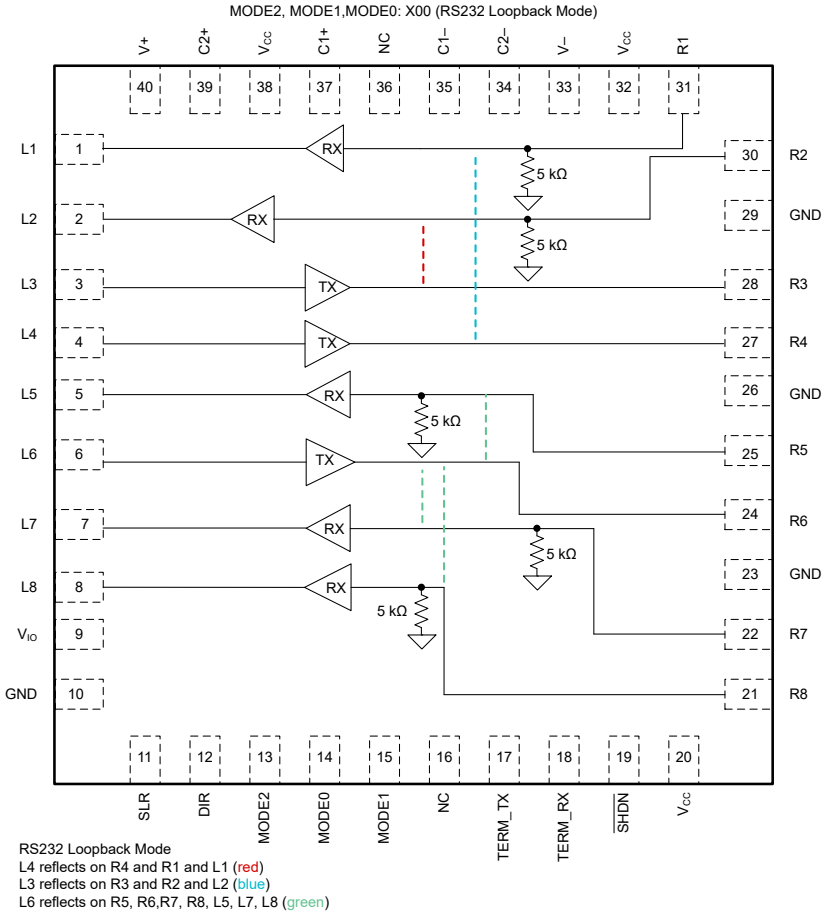

图 7-2. RS-232 Loopback Mode

Copyright © 2024 Texas Instruments Incorporated

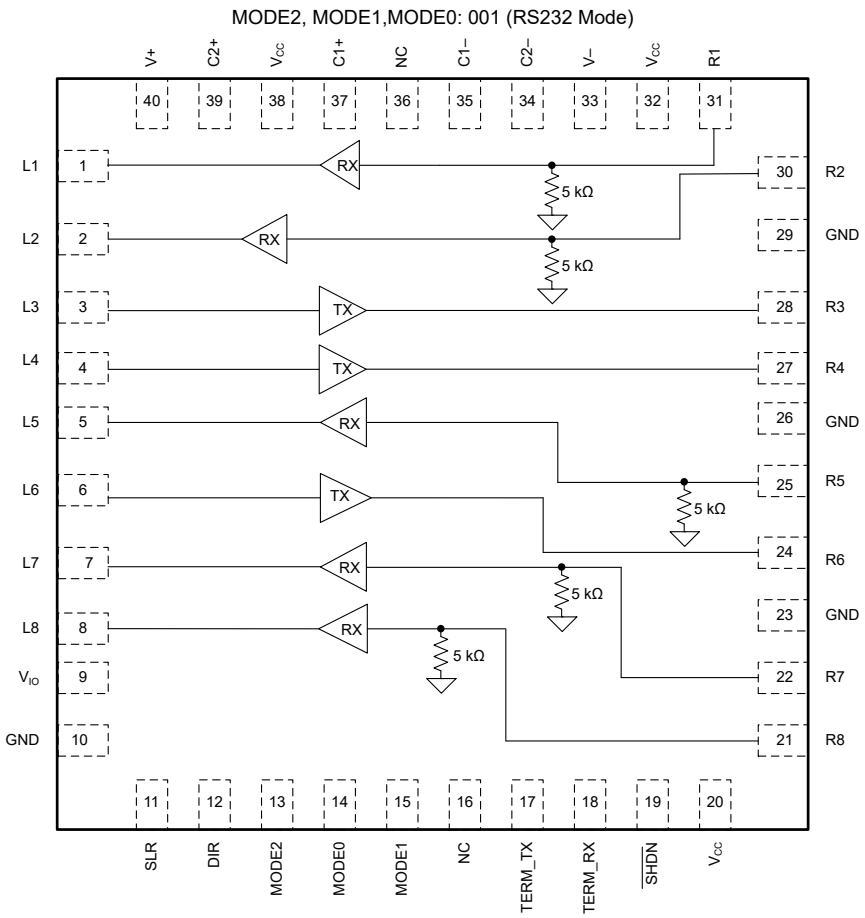

图 7-3. RS-232 3T5R Mode

Copyright © 2024 Texas Instruments Incorporated

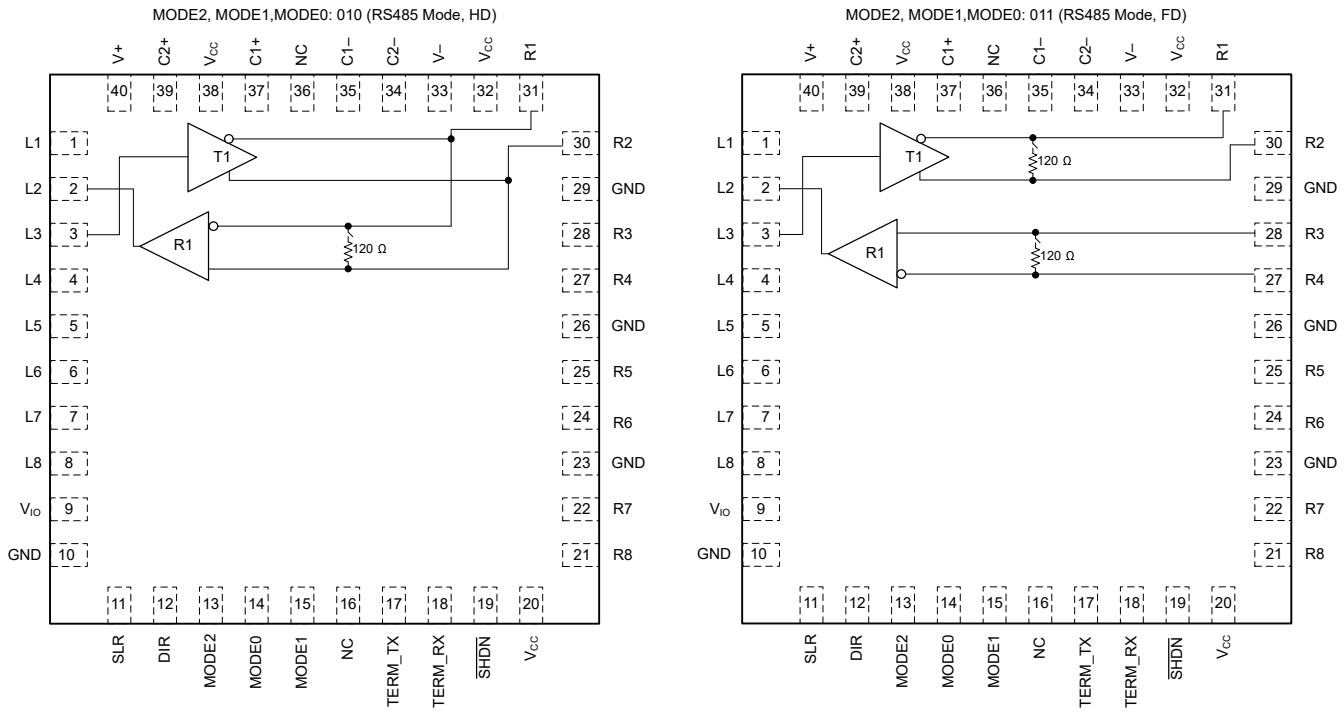

图 7-4. RS485 Half duplex and Full duplex mode

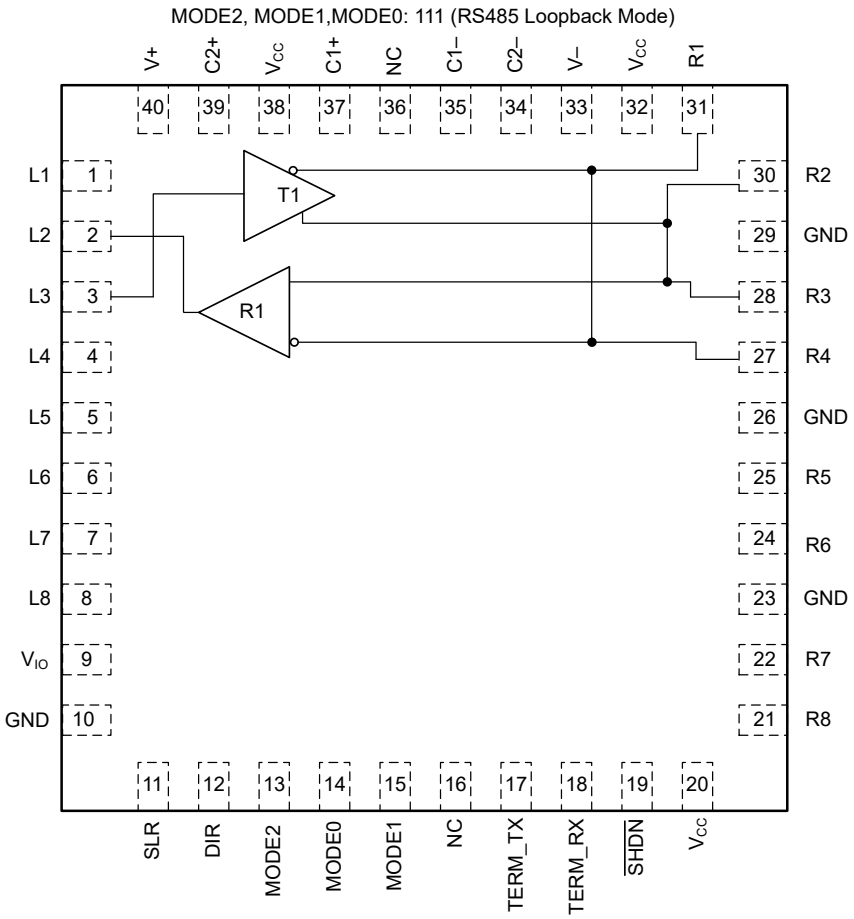

图 7-5. RS-485 Loopback Mode

Copyright © 2024 Texas Instruments Incorporated

7.4.1 RS-485 Functionality

When the driver enable pin, DIR, is logic high, the differential outputs R2 and R1 follow the logic states at data input L3. A logic high at L3 causes R2 to turn high and R1 to turn low. In this case, the differential output voltage defined as $V_{OD} = V_{R2} - V_{R1}$ is positive. When L3 is low, the output states reverse: R1 turns high, R2 becomes low, and V_{OD} is negative.

When DIR is low, both outputs turn high-impedance. In this condition, the logic state at L3 is irrelevant. The DIR pin has an internal pull-down resistor to ground, thus when left open the driver is disabled (high-impedance) by default. The L3 pin has an internal pull-up resistor to V_{IO}, thus, when left open while the driver is enabled, output R2 turns high and R1 turns low.

表 7-4 is valid for both half duplex and full duplex modes, and is independent of state of TERM_TX, TERM_RX and SLR pins.

表 7-4. Driver Function Table

INPUT	ENABLE	OUTPUTS		FUNCTION
L3	DIR	R2	R1	
H	H	H	L	Actively drive bus high
L	H	L	H	Actively drive bus low
X	L	High impedance	High impedance	Driver disabled
X	OPEN	High impedance	High impedance	Driver disabled by default
OPEN	H	H	L	Actively drive bus high by default

In full duplex mode, if $\overline{SHDN}$ is high, receiver is always enabled. In half duplex mode, receiver is enabled if DIR = Low/floating and disabled if DIR = V_{IO}. When the differential input voltage defined as $V_{ID} = V_{R2} - V_{R1}$ or $V_{R3} - V_{R4}$ is higher than the positive input threshold, V_{TH+}, the receiver output, L2, turns high. When V_{ID} is lower than the negative input threshold, V_{TH-}, the receiver output, L2, turns low. If V_{ID} is between V_{TH+} and V_{TH-} the output is indeterminate.

Internal biasing of the receiver inputs causes the output to go failsafe-high when the transceiver is disconnected from the bus (open-circuit), the bus lines are shorted to one another (short-circuit), or the bus is not actively driven (idle bus).

In half duplex mode, when DIR is high, the receiver output is high-impedance and the magnitude and polarity of V_{ID} are irrelevant.

表 7-5 is valid irrespective of state of TERM_TX, TERM_RX and SLR pins. Other logic outputs L1, L5, L7 and L8 remain high in RS-485 mode.

表 7-5. Receiver Function Table

DIFFERENTIAL INPUT	OUTPUT	FUNCTION
$V_{ID} = V_{R2} - V_{R1}$(Half duplex mode) or $V_{R3} - V_{R4}$(Full duplex mode)	L2	
$V_{TH+} < V_{ID}$	H	Receive valid bus high
$V_{TH-} < V_{ID} < V_{TH+}$	?	Indeterminate bus state
$V_{ID} < V_{TH-}$	L	Receive valid bus low
X	High impedance for DIR = V_{IO} in Half duplex mode	Receiver disabled in half duplex mode for DIR = V_{IO}
Open-circuit bus	H	Fail-safe high output
Short-circuit bus	H	Fail-safe high output
Idle (terminated) bus	H	Fail-safe high output

Copyright © 2024 Texas Instruments Incorporated

7.4.2 RS-232 Functionality

In RS-232 mode, only way to disable driver is to go in shutdown mode by pulling $\overline{SHDN}$ pin low. A logic high at inputs for driver L3, L4 and L6 causes driver outputs R3, R4 and R6 to be driven low towards negative charge pump output V-. A logic low at inputs for driver L3, L4 and L6 causes driver outputs R3, R4 and R6 to be driven high towards positive charge pump output V+. If logic inputs are left floating due to the pull-up resistors on driver logic inputs, the driver outputs are driven low towards V-.

表 7-6 is valid irrespective of the state of SLR pin.

表 7-6. Driver Function Table

INPUT	ENABLE	OUTPUTS	FUNCTION
L3, L4, L6	$\overline{SHDN}$	R3, R4, R6	
H	H	Low (driven towards V-)	Normal operation with inverting logic
L	H	H (Driven towards V+)	Normal operation with inverting logic
X	L	High impedance	TX and RX are disabled in shutdown mode
Open	H	Low (driven towards V-)	Since pull-up on logic input pin, output driven low by default

For the RS-232 receiver, if the receiver bus inputs are above rising threshold V_{IT+}, corresponding received logic output goes low. Also, if the receiver bus inputs are below falling threshold V_{IT-}, corresponding received logic output goes high.

表 7-7 is valid irrespective of the state of SLR pin.

表 7-7. Receiver Function Table

RS-232 BUS INPUT	LOGIC OUTPUT	FUNCTION
V_{IRx} (voltage on R1, R2, R5, R7 or R8)	L1, L2, L5, L7, L8	
$V_{IT+} < V_{IRx}$	L	Normal operation with inverting logic
$V_{IT-} < V_{IRx} < V_{IT+}$	?	Indeterminate bus state
$V_{IRx} < V_{IT-}$	H	Normal operation with inverting logic
X	High impedance for $\overline{SHDN}$ = GND	Receiver disabled in shutdown mode
Open-circuit bus	H	Fail-safe high output

Copyright © 2024 Texas Instruments Incorporated

7.4.3 Mode Control

RS-232 3T5R to RS-232 loopback mode transition and RS-232 loopback mode to RS-232 3T5R direct mode transition is not allowed. These 2 mode transitions must go through shutdown mode in between. Rest all combination of mode transitions are allowed.

表 7-8. MODE Control Function Table

MODE2	MODE1	MODE0	Operating mode	Function
X	Logic low	Logic low	RS-232 loopback, charge pump is ON, V+/V- are regulated	L3 reflects on L2/R2/R3; L4 reflects on L1/R4/R1; L6 reflects on L5, L7, L8, R5, R6, R7 and R8
X	Logic low	Logic high	RS-232 3T5R mode, charge pump is ON, V+/V- are regulated	3T5R mode; L3, L4, L6 are Logic inputs for RS232 driver; L1, L2, L5, L7, L8 are Logic outputs
X	Logic high	Logic low	RS-485 half duplex mode (charge pump is off)	L2 is RX Logic output; L3 is Driver Logic input; R1 R2 are Bus inverting and non-inverting terminals respectively
Logic low or float	Logic high	Logic high	RS-485 full duplex mode (charge pump is off)	R1R2 are inverting and non-inverting driver terminals; R3R4 are non-inverting and inverting receiver terminals.
Logic high	Logic high	Logic high	RS-485 loopback mode (charge pump is off)	R1, R2, R3, R4 continue to be bus terminals and reflect data on L3; DIR is don't care in this mode; TERM_RX not supported. External termination on R3/R4 not supported. R1/R2 can have internal or external termination.

Copyright © 2024 Texas Instruments Incorporated

8 Application and Implementation

备注

Information in the following applications sections is not part of the TI component specification, and TI does not warrant its accuracy or completeness. TI’s customers are responsible for determining suitability of components for their purposes. Customers should validate and test their design implementation to confirm system functionality.

8.1 Application Information

THVD4431 is a highly integrated multiprotocol transceiver supporting RS-232, RS-422 and RS-485 physical layer and is used for asynchronous data transmissions. MODE pins allow for the configuration of different operating modes. Device allows point-to-point RS-232 communication port and multipoint RS-485 communication port over common connector. The device also features integrated 120 Ω switchable termination resistor on RS-485 bus lines which enables same device to be used for middle nodes or end nodes in an RS-485 network. When the device is configured in RS-232 mode, RS-485 circuits and 120 Ω termination are disabled and do not interfere in RS-232 communication. For RS-232 communication, charge pump and 5k Ω resistor to ground on receiver bus pins is integrated in the device. This 5k Ω resistor and charge pump is automatically disabled in RS-485 mode. Slew rate limiting pin is provided so that same device can be used in slow speed or fast speed RS-485 and RS-232 applications. When ultra low power consumption is needed, device can be put in shutdown mode using $\overline{SHDN}$ pin. All these features make the device completely flexible and suitable for various application needs. Integration of termination resistor saves significant PCB area compared to discrete implementation.

8.2 Typical Application

An RS-485 bus consists of multiple transceivers connecting in parallel to a bus cable. To eliminate line reflections, each cable end is terminated with a termination resistor, R_T, whose value matches the characteristic impedance, Z_0, of the cable. This method, known as parallel termination, generally allows for higher data rates over longer cable length.

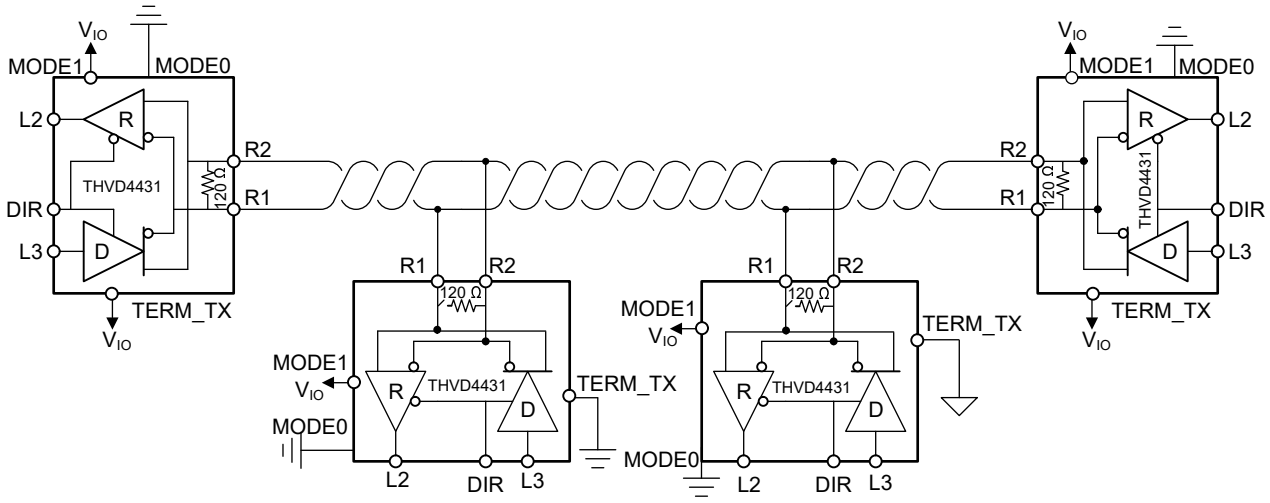

图 8-1. Typical RS-485 Network With Half-Duplex Transceivers

Copyright © 2024 Texas Instruments Incorporated

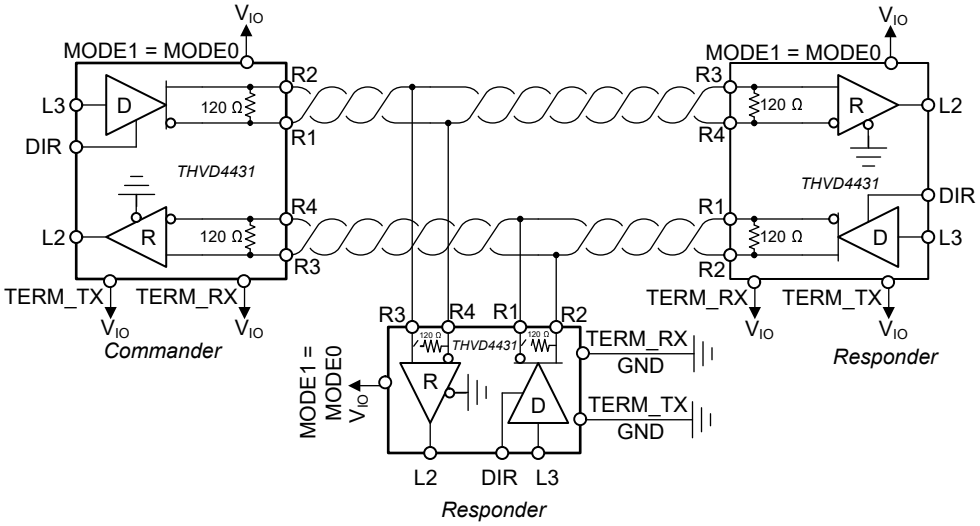

图 8-2. Typical RS-485 Network With Full-Duplex Transceivers

THVD4431 can be used in both networks (half and full duplex) and at all nodes (end node or middle nodes) since device has the configurability based on MODE2, MODE1, MODE0 pins and TERM_TX, TERM_RX pins.

THVD4431 also consists of three line drivers, five line receivers and dual charge pump circuit to enable RS-232 point-to-point serial communication. Full duplex transmission with hardware flow control is feasible with this device. This device provides the electrical interface between an asynchronous communication controller and the serial-port connector.

Copyright © 2024 Texas Instruments Incorporated

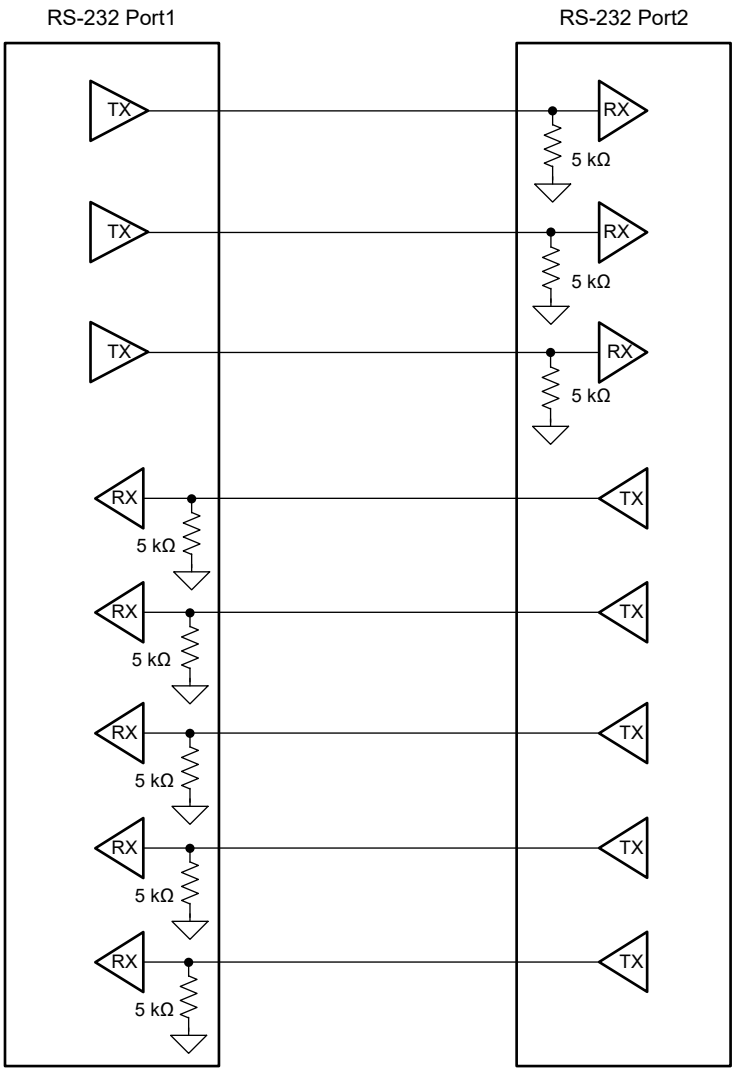

图 8-3. RS-232 serial communication

8.2.1 Design Requirements

RS-485 is a robust electrical standard suitable for long-distance networking that may be used in a wide range of applications with varying requirements, such as distance, data rate, and number of nodes. RS-232 is more suitable for debug or configuration point to point applications.

8.2.1.1 Data Rate and Bus Length for RS-485

There is an inverse relationship between data rate and cable length, which means the higher the data rate, the short the cable length. Conversely, the lower the data rate, the longer the cable length. While most RS-485 systems use data rates between 10 kbps and 100 kbps, some applications require data rates up to 250 kbps at distances of 4000 feet and longer. Longer distances are possible by allowing for small signal jitter of up to 5 or 10%.

Copyright © 2024 Texas Instruments Incorporated

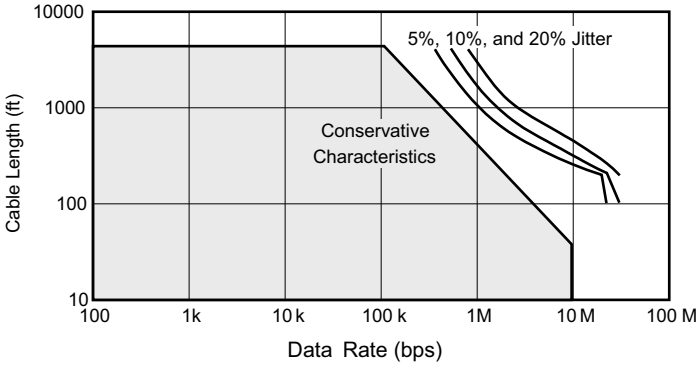

图 8-4. Cable Length vs Data Rate Characteristic

8.2.1.2 Stub Length for RS-485 Network

When connecting a node to the bus, the distance between the transceiver inputs and the cable trunk, known as the stub, should be as short as possible. Stubs present a non-terminated piece of bus line which can introduce reflections of varying phase as the length of the stub increases. As a general guideline, the electrical length, or round-trip delay, of a stub should be less than one-tenth of the rise time of the driver, thus giving a maximum physical stub length as shown in 方程式 1.

$$L_{(STUB)} \leqslant 0.1 \times t_r \times v \times c \quad (1)$$

where

- t_r is the 10/90 rise time of the driver
- c is the speed of light (3×10^8 m/s)
- v is the signal velocity of the cable or trace as a factor of c

8.2.1.3 Bus Loading for RS-485 Network

The RS-485 standard specifies that a compliant driver must be able to drive 32 unit loads (UL), where 1 unit load represents a load impedance of approximately 12 kΩ. Because the THVD4431 in RS-485 half and full duplex mode consists of 1/8 UL transceivers which represents load resistance of approximately 96 kohm, connecting up to 256 receivers to the bus is possible for a limited common mode range of - 7 V to 12 V.

8.2.2 Detailed Design Procedure

图 8-5 suggests an application schematic for THVD4431. The device has all logic pins on one side and bus side pins on other side to enable a flow-through layout in end application.

Copyright © 2024 Texas Instruments Incorporated

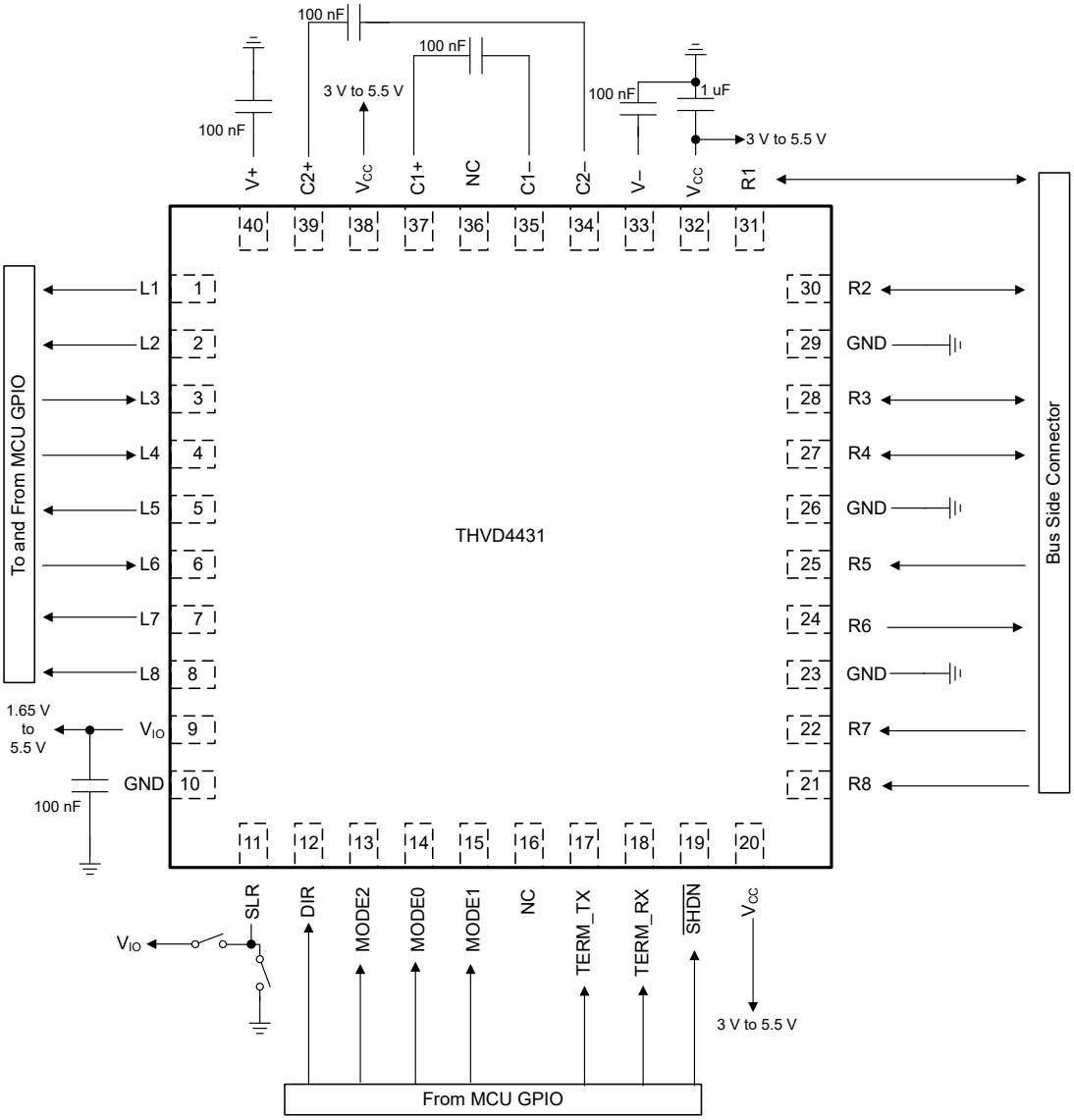

图 8-5. Typical application diagram for THVD4431

All V_{CC} power pins should have 1 μF decoupling capacitor close to the respective device pins. RS-232 charge pump is designed such that 100 nF charge pump capacitors work for both 3.3 V and 5 V operating V_{CC} supply.

Copyright © 2024 Texas Instruments Incorporated

8.2.3 Application Curves

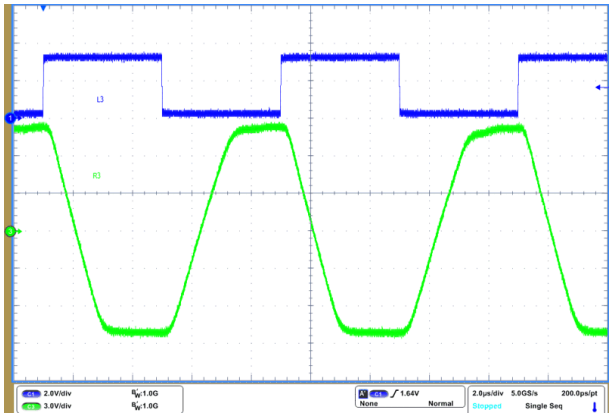

V_{CC} = 5 V Bus Load = 5 kΩ||2.5 nF
250 kbps SLR = V_{IO}

图 8-6. RS-232 Driver Waveform at 250kbps and V_{CC} = 5 V

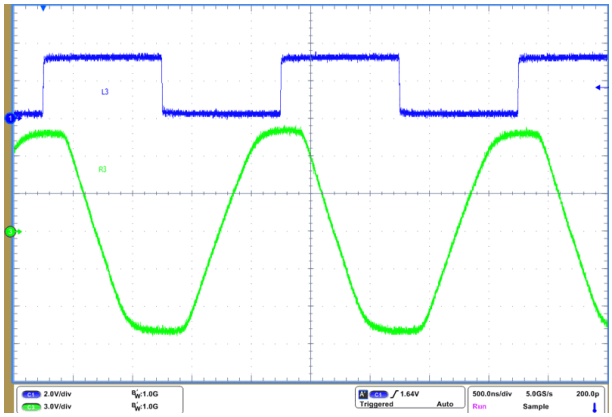

V_{CC} = 5 V Bus Load = 5 kΩ||1 nF
1 Mbps SLR = GND

图 8-7. RS-232 Driver Waveform at 1Mbps and V_{CC} = 5 V

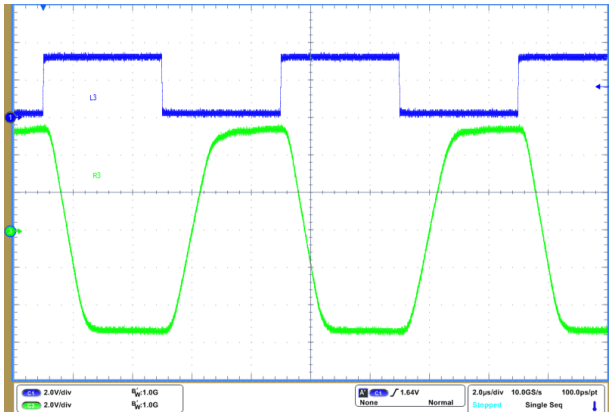

V_{CC} = 3.3 V Bus Load = 5 kΩ||2.5 nF
250 kbps SLR = V_{IO}

图 8-8. RS-232 Driver Waveform at 250kbps and V_{CC} = 3.3 V

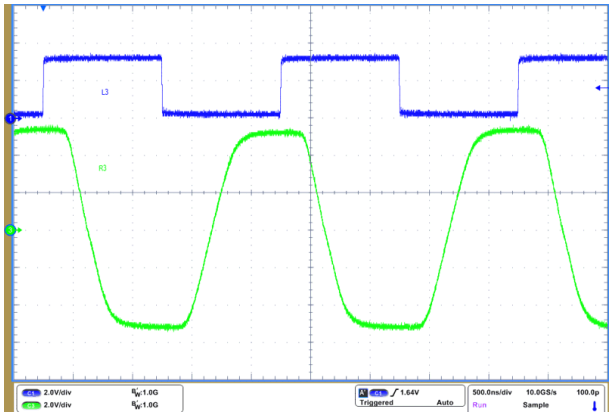

V_{CC} = 3.3 V R_L = 5 kΩ||1 nF
1 kbps SLR = GND

图 8-9. RS-232 Driver Waveform at 1Mbps and V_{CC} = 3.3 V

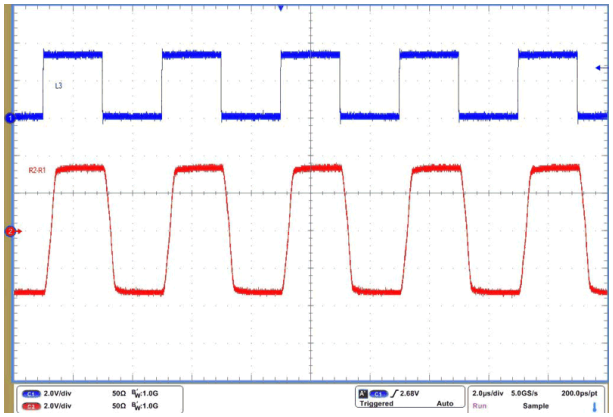

V_{CC} = 5 V Bus Load = 54 Ω||50 pF
SLR = V_{IO} Square wave at 500 kbps

图 8-10. RS-485 Driver Waveform at 500 kbps and V_{CC} = 5 V

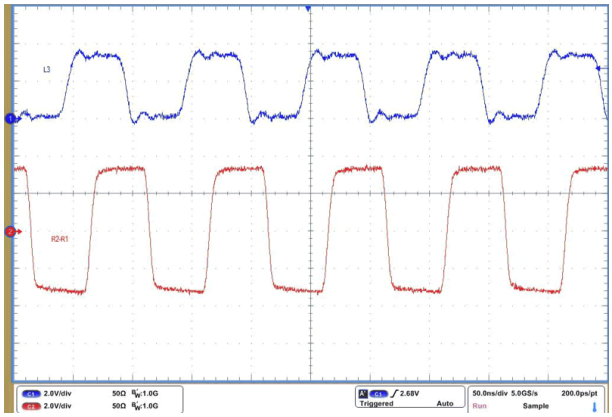

V_{CC} = 5 V Bus Load = 54 Ω||50 pF
SLR = GND Square wave at 20 kbps

图 8-11. RS-485 Driver Waveform at 20 Mbps and V_{CC} = 5 V

Copyright © 2024 Texas Instruments Incorporated

8.2.3 Application Curves (continued)

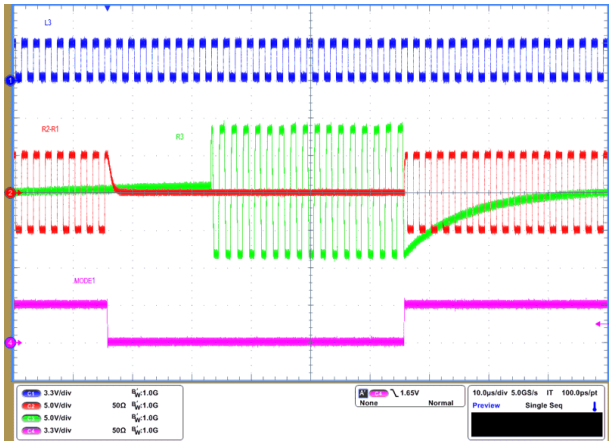

V_{CC} = 5 V L3 = 1 Mbps square wave
SLR = GND MODE1 toggled at 10 khz

图 8-12. RS-232 to RS-485 Mode Switching Waveform

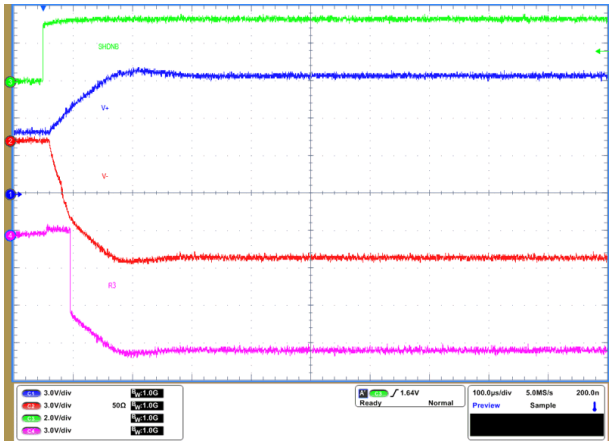

V_{CC} = 5 V L3 = GND
SHDN toggled

图 8-13. Mode Switching Waveform From Shutdown to RS-232 Mode

8.3 Power Supply Recommendations

For reliable operation at all data rates and supply voltages, each supply should be decoupled with a ceramic capacitor located as close to the supply pins as possible. Recommended bypass capacitor for V_{CC} is 1 μF, for V_{IO} is 100 nF, for V+, V- charge pump voltage supplies is 100 nF. Besides this, two charge pump flying capacitors of 100 nF each are needed between C1+, C1- terminals and between C2+, C2- terminals. For V_{CC} = 3.3V ±10%, V+ and V- voltages are regulated to +5.5V and -5.5V typically. If an application needs larger RS-232 output voltages, V_{CC} = 5V ± 10% is recommended because V+ and V- are regulated to ±9.5V.

Copyright © 2024 Texas Instruments Incorporated

8.4 Layout

8.4.1 Layout Guidelines

Robust and reliable bus node design often requires the use of external transient protection devices to protect against surge transients that may occur in industrial environments. THVD4431 has integrated IEC ESD and EFT protection. So if the application does not need IEC Surge protection, external transient protection may not be needed. Since these transients have a wide frequency bandwidth (from approximately 3 MHz to 300 MHz), high-frequency layout techniques should be applied during PCB design.

1. Place the external protection circuitry close to the bus connector to prevent noise transients from propagating across the board.
2. Use V_{CC} and ground planes to provide low inductance. Note that high-frequency currents tend to follow the path of least impedance and not the path of least resistance.
3. Design the protection components into the direction of the signal path. Do not force the transient currents to divert from the signal path to reach the protection device.
4. Apply decoupling capacitors and charge pump capacitors as close as possible to the respective device pins such as V_{CC}, V_{IO}, V+, V-, C1+ to C1-, C2+ to C2- pins of transceiver.
5. Use at least two vias for V_{CC} and ground connections of decoupling capacitors and protection devices to minimize effective via inductance.
6. Optionally, use 1-kΩ to 10-kΩ pull-up and pull-down resistors for control lines to limit noise currents in these lines during transient events.

Copyright © 2024 Texas Instruments Incorporated

8.4.2 Layout Example

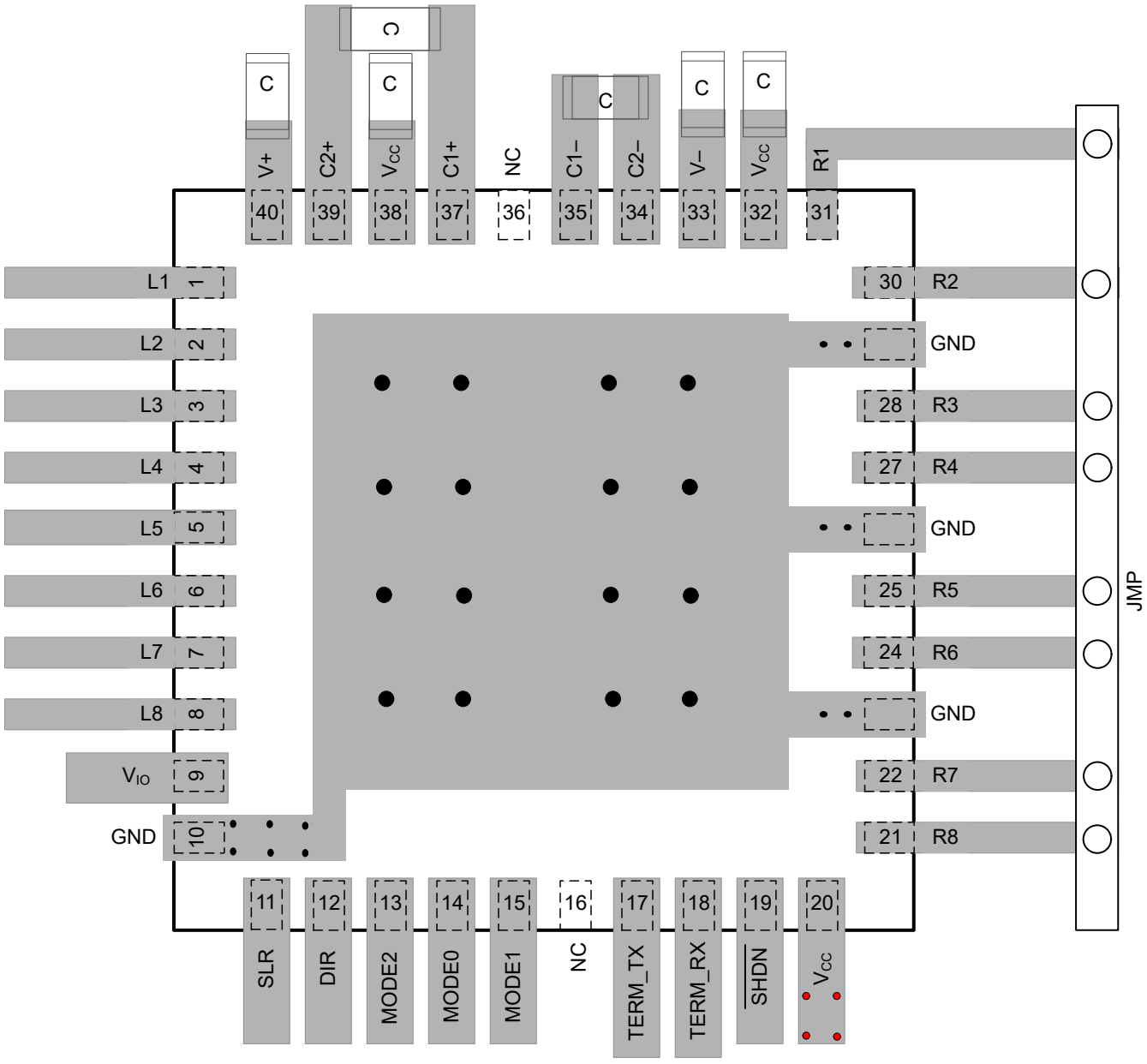

图 8-14. Layout Example

Copyright © 2024 Texas Instruments Incorporated

9 Device and Documentation Support

9.1 Device Support

9.1.1 第三方产品免责声明

TI 发布的与第三方产品或服务有关的信息，不能构成与此类产品或服务或保修的适用性有关的认可，不能构成此类产品或服务单独或与任何 TI 产品或服务一起的表示或认可。

9.2 接收文档更新通知

要接收文档更新通知，请导航至 ti.com 上的器件产品文件夹。点击*通知* 进行注册，即可每周接收产品信息更改摘要。有关更改的详细信息，请查看任何已修订文档中包含的修订历史记录。

9.3 支持资源

TI E2E™ 中文支持论坛是工程师的重要参考资料，可直接从专家处获得快速、经过验证的解答和设计帮助。搜索现有解答或提出自己的问题，获得所需的快速设计帮助。

链接的内容由各个贡献者“按原样”提供。这些内容并不构成 TI 技术规范，并且不一定反映 TI 的观点；请参阅 TI 的使用条款。

9.4 Trademarks

TI E2E™ is a trademark of Texas Instruments.
所有商标均为其各自所有者的财产。

9.5 静电放电警告

静电放电 (ESD) 会损坏这个集成电路。德州仪器 (TI) 建议通过适当的预防措施处理所有集成电路。如果不遵守正确的处理和安装程序，可能会损坏集成电路。

ESD 的损坏小至导致微小的性能降级，大至整个器件故障。精密的集成电路可能更容易受到损坏，这是因为非常细微的参数更改都可能会导致器件与其发布的规格不相符。

9.6 术语表

TI 术语表	本术语表列出并解释了术语、首字母缩略词和定义。

10 Revision History

Changes from Revision A (November 2023) to Revision B (April 2024)	Page
• Changed values from nF to pF in 图 5-15 and 图 5-16	15

Changes from Revision * (August 2023) to Revision A (November 2023)	Page
• 将文档状态从 *预告信息* 更改为*量产数据*	1

11 Mechanical, Packaging, and Orderable Information

The following pages include mechanical, packaging, and orderable information. This information is the most current data available for the designated devices. This data is subject to change without notice and revision of this document. For browser-based versions of this data sheet, refer to the left-hand navigation.

Copyright © 2024 Texas Instruments Incorporated

PACKAGING INFORMATION

Orderable part number	Status (1)	Material type (2)	Package | Pins	Package qty | Carrier	RoHS (3)	Lead finish/ Ball material (4)	MSL rating/ Peak reflow (5)	Op temp (°C)	Part marking (6)
THVD4431RHAR	Active	Production	VQFN (RHA) | 40	4000 | LARGE T&R	Yes	NIPDAU	Level-1-260C-UNLIM	-40 to 125	THVD 4431
THVD4431RHAR.A	Active	Production	VQFN (RHA) | 40	4000 | LARGE T&R	Yes	NIPDAU	Level-1-260C-UNLIM	-40 to 125	THVD 4431

(1) **Status:** For more details on status, see our product life cycle.

(2) **Material type:** When designated, preproduction parts are prototypes/experimental devices, and are not yet approved or released for full production. Testing and final process, including without limitation quality assurance, reliability performance testing, and/or process qualification, may not yet be complete, and this item is subject to further changes or possible discontinuation. If available for ordering, purchases will be subject to an additional waiver at checkout, and are intended for early internal evaluation purposes only. These items are sold without warranties of any kind.

(3) **RoHS values:** Yes, No, RoHS Exempt. See the TI RoHS Statement for additional information and value definition.

(4) **Lead finish/Ball material:** Parts may have multiple material finish options. Finish options are separated by a vertical ruled line. Lead finish/Ball material values may wrap to two lines if the finish value exceeds the maximum column width.

(5) **MSL rating/Peak reflow:** The moisture sensitivity level ratings and peak solder (reflow) temperatures. In the event that a part has multiple moisture sensitivity ratings, only the lowest level per JEDEC standards is shown. Refer to the shipping label for the actual reflow temperature that will be used to mount the part to the printed circuit board.

(6) **Part marking:** There may be an additional marking, which relates to the logo, the lot trace code information, or the environmental category of the part.

Multiple part markings will be inside parentheses. Only one part marking contained in parentheses and separated by a "~" will appear on a part. If a line is indented then it is a continuation of the previous line and the two combined represent the entire part marking for that device.

Important Information and Disclaimer: The information provided on this page represents TI's knowledge and belief as of the date that it is provided. TI bases its knowledge and belief on information provided by third parties, and makes no representation or warranty as to the accuracy of such information. Efforts are underway to better integrate information from third parties. TI has taken and continues to take reasonable steps to provide representative and accurate information but may not have conducted destructive testing or chemical analysis on incoming materials and chemicals. TI and TI suppliers consider certain information to be proprietary, and thus CAS numbers and other limited information may not be available for release.

In no event shall TI's liability arising out of such information exceed the total purchase price of the TI part(s) at issue in this document sold by TI to Customer on an annual basis.

TAPE AND REEL INFORMATION

REEL DIMENSIONS

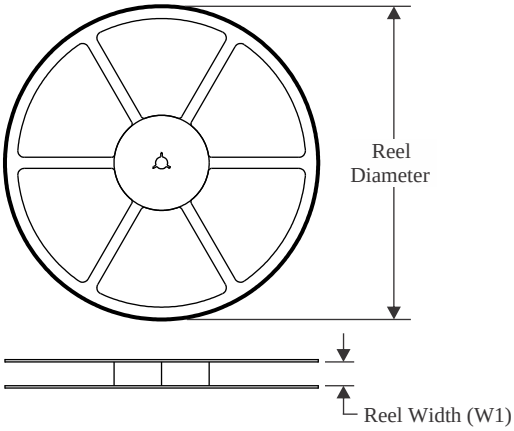

TAPE DIMENSIONS

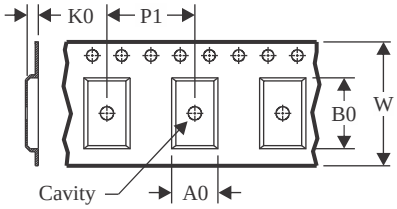

A0	Dimension designed to accommodate the component width
B0	Dimension designed to accommodate the component length
K0	Dimension designed to accommodate the component thickness
W	Overall width of the carrier tape
P1	Pitch between successive cavity centers

QUADRANT ASSIGNMENTS FOR PIN 1 ORIENTATION IN TAPE

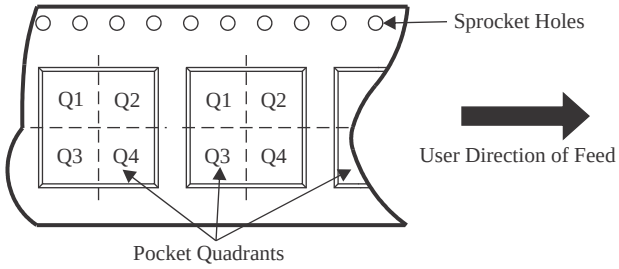

*All dimensions are nominal

Device	Package Type	Package Drawing	Pins	SPQ	Reel Diameter (mm)	Reel Width W1 (mm)	A0 (mm)	B0 (mm)	K0 (mm)	P1 (mm)	W (mm)	Pin1 Quadrant
THVD4431RHAR	VQFN	RHA	40	4000	330.0	16.4	6.3	6.3	1.1	12.0	16.0	Q2

TAPE AND REEL BOX DIMENSIONS

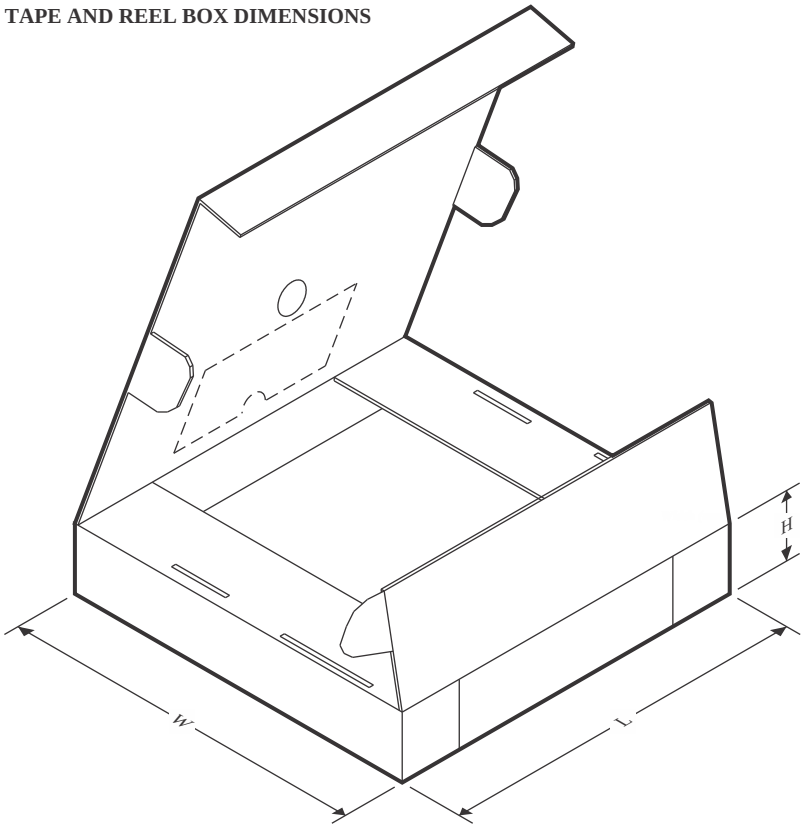

*All dimensions are nominal

Device	Package Type	Package Drawing	Pins	SPQ	Length (mm)	Width (mm)	Height (mm)
THVD4431RHAR	VQFN	RHA	40	4000	360.0	360.0	36.0

GENERIC PACKAGE VIEW

RHA 40

VQFN - 1 mm max height

6 x 6, 0.5 mm pitch

PLASTIC QUAD FLATPACK - NO LEAD

This image is a representation of the package family, actual package may vary.
Refer to the product data sheet for package details.

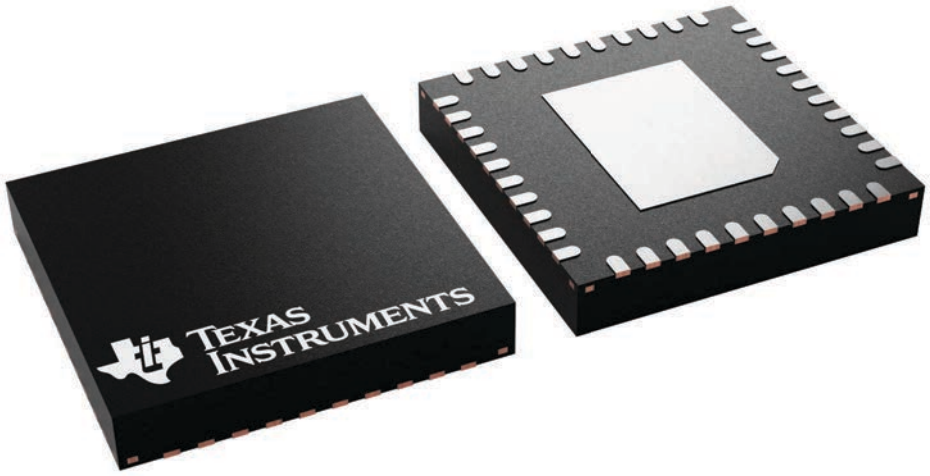

4225870/A

DATA BOOK
PACKAGE OUTLINE

DRAFTER: K. SINCERBOX	DATE: 09/01/2022					DIMENSIONS IN MILLIMETERS	
DESIGNER:	DATE:	TEXAS INSTRUMENTS SEMICONDUCTOR OPERATIONS				CODE IDENTITY NUMBER 01295	
CHECKER: K. SINCERBOX	DATE: 09/01/2022						
ENGINEER: S. KUMMERL	DATE: 09/01/2022	ePOD, RHA0040R / VQFN, 40 PIN, 0.5 MM PITCH					
APPROVED: D. CHIN & D. KAN	DATE: 09/01/2022						
RELEASED: K. SINCERBOX	DATE: 09/01/2022						
TEMPLATE INFO: EDGE# 4218519	DATE: 04/07/2016	SCALE NTS	SIZE A	4229001		REV A	PAGE 1 OF 5

RHA0040R

PACKAGE OUTLINE

VQFN - 1 mm max height

PLASTIC QUAD FLATPACK - NO LEAD

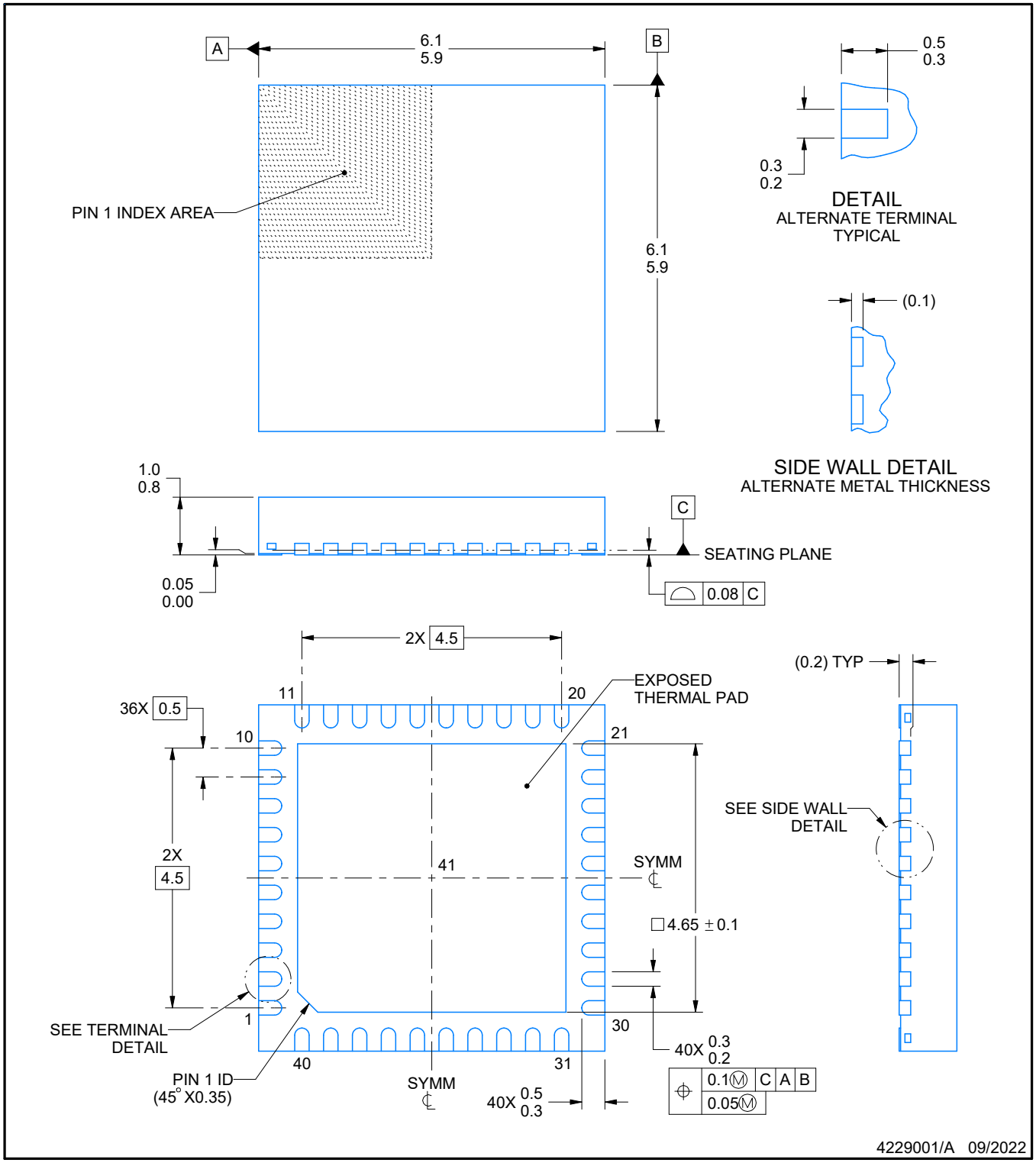

4229001/A 09/2022

NOTES:

1. All linear dimensions are in millimeters. Any dimensions in parenthesis are for reference only. Dimensioning and tolerancing per ASME Y14.5M.
2. This drawing is subject to change without notice.
3. The package thermal pad must be soldered to the printed circuit board for thermal and mechanical performance.

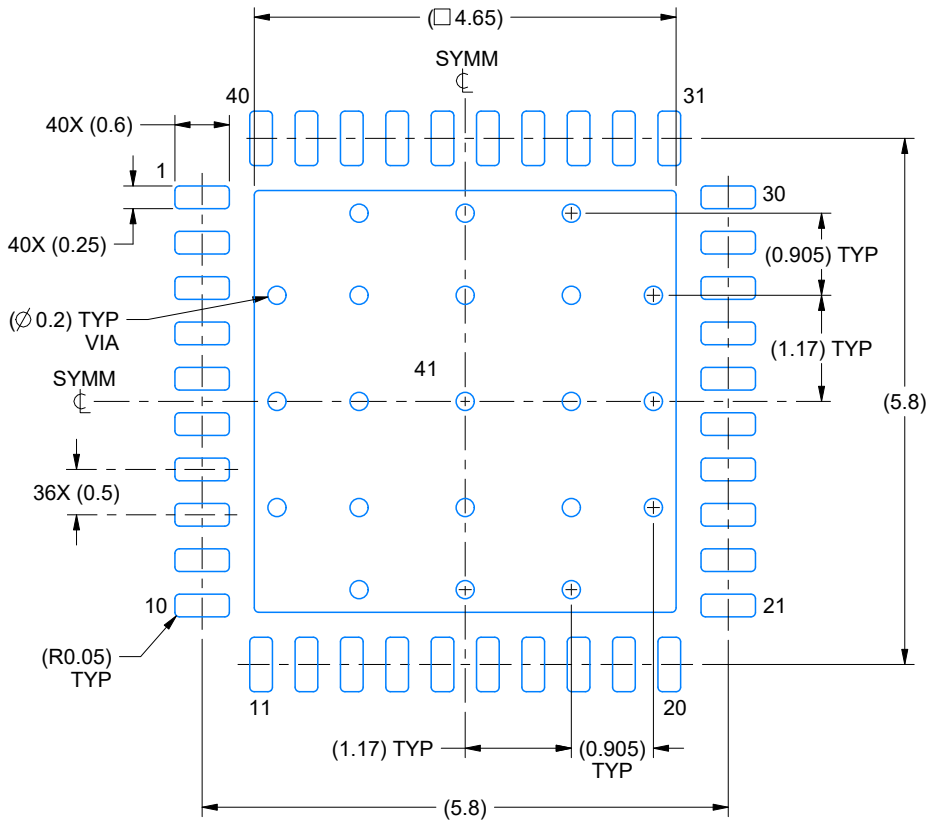

LAND PATTERN EXAMPLE
EXPOSED METAL SHOWN
SCALE:12X

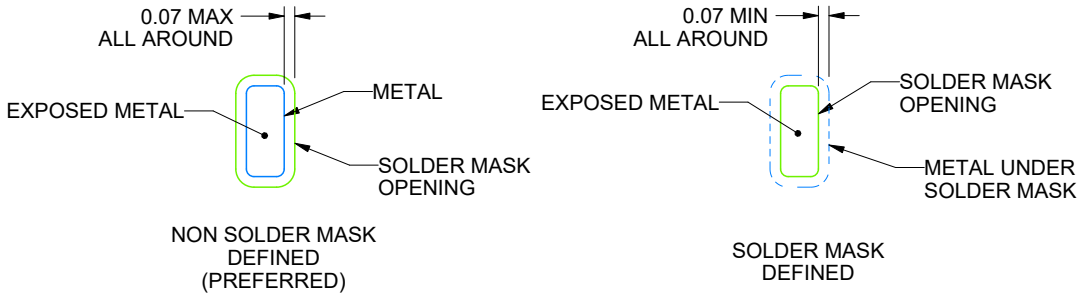

SOLDER MASK DETAILS

4229001/A 09/2022

NOTES: (continued)

4. This package is designed to be soldered to a thermal pad on the board. For more information, see Texas Instruments literature number SLUA271 (www.ti.com/lit/slua271).
5. Vias are optional depending on application, refer to device data sheet. If any vias are implemented, refer to their locations shown on this view. It is recommended that vias under paste be filled, plugged or tented.

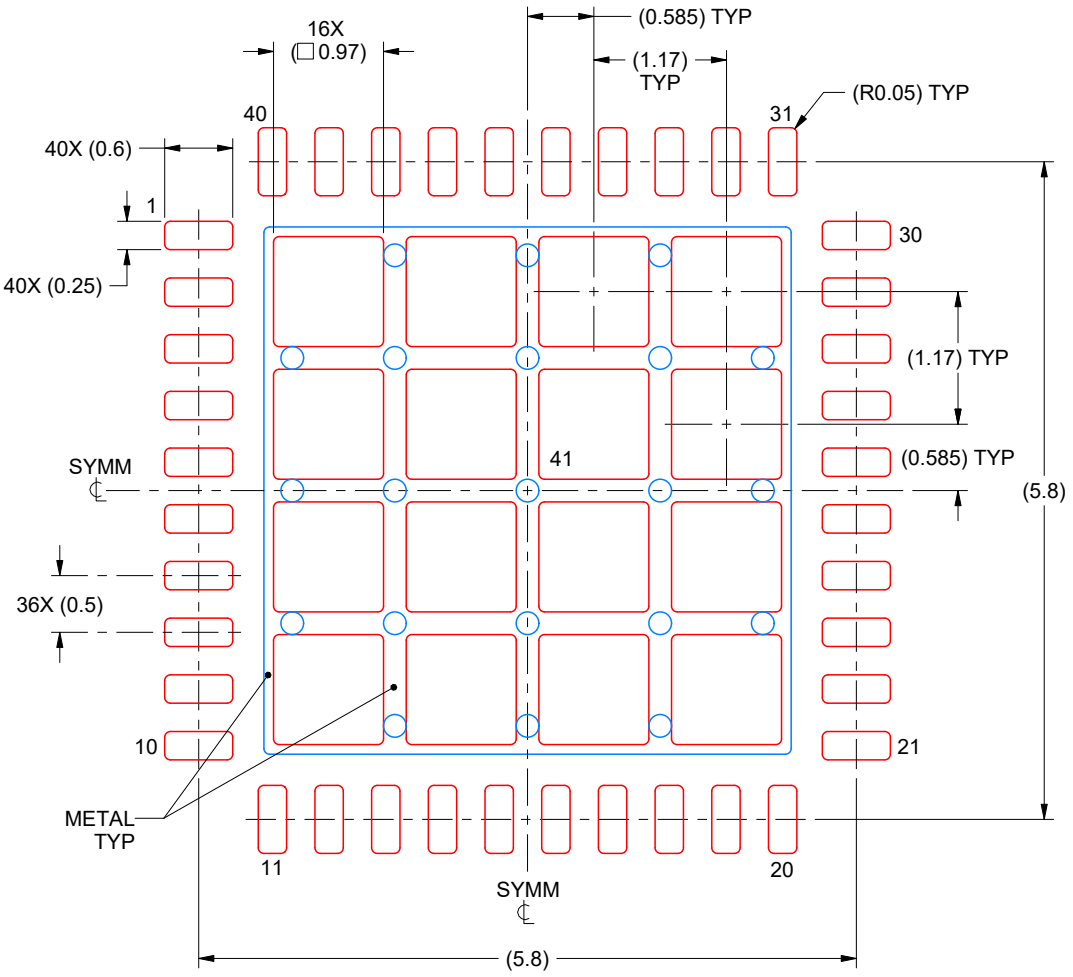

SOLDER PASTE EXAMPLE
BASED ON 0.125 mm THICK STENCIL

EXPOSED PAD 41:
69% PRINTED SOLDER COVERAGE BY AREA
SCALE:15X

4229001/A 09/2022

NOTES: (continued)

6. Laser cutting apertures with trapezoidal walls and rounded corners may offer better paste release. IPC-7525 may have alternate design recommendations.

REVISIONS

REV	DESCRIPTION	ECR	DATE	ENGINEER / DRAFTSMAN
A	RELEASE NEW DRAWING	2201054	09/01/2022	S. KUMMERL / K. SINCERBOX

PACKAGE OUTLINE

RHA0040Y

VQFN - 1 mm max height

PLASTIC QUAD FLATPACK - NO LEAD

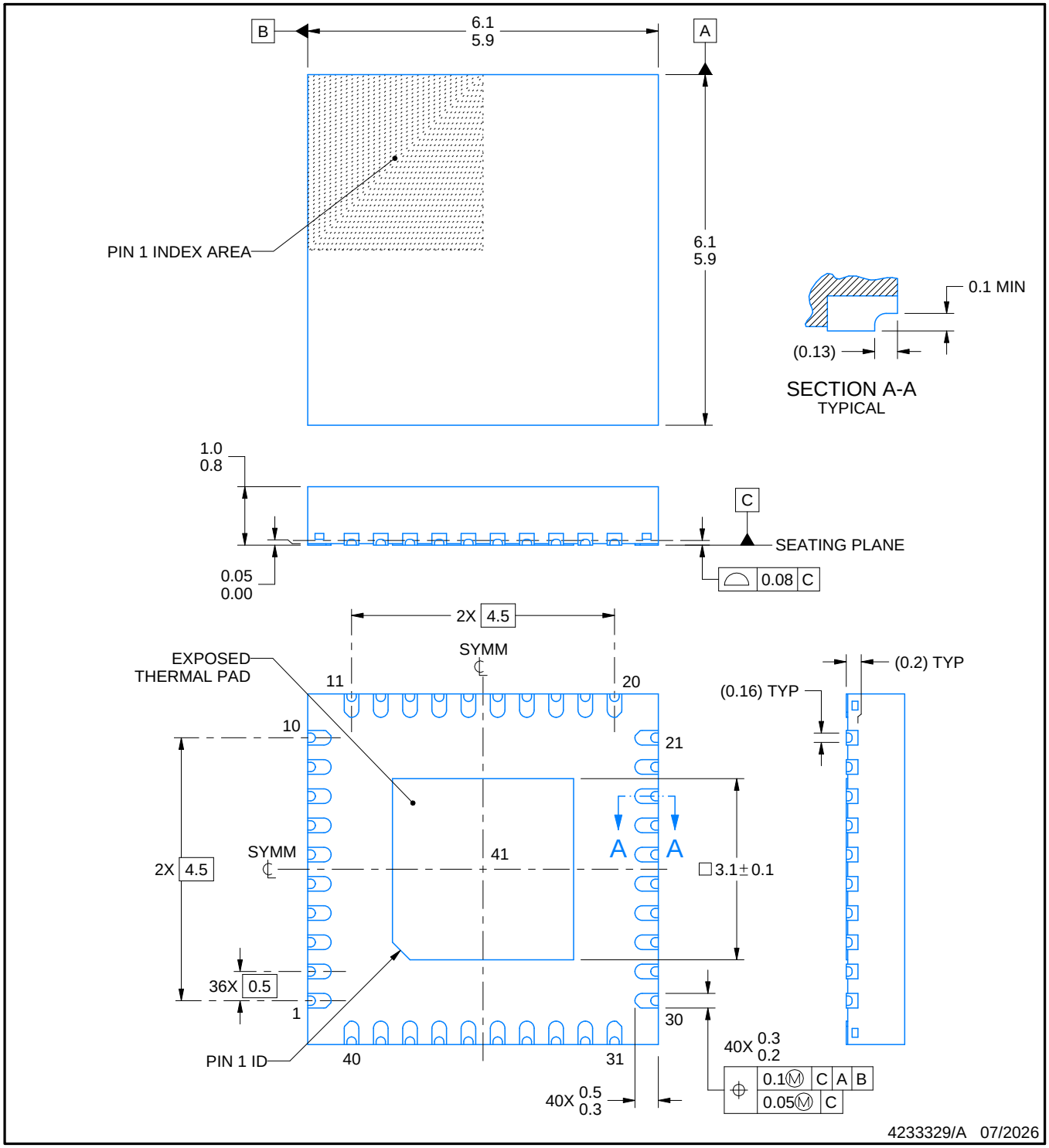

NOTES:

1. All linear dimensions are in millimeters. Any dimensions in parenthesis are for reference only. Dimensioning and tolerancing per ASME Y14.5M.
2. This drawing is subject to change without notice.
3. The package thermal pad must be soldered to the printed circuit board for thermal and mechanical performance.

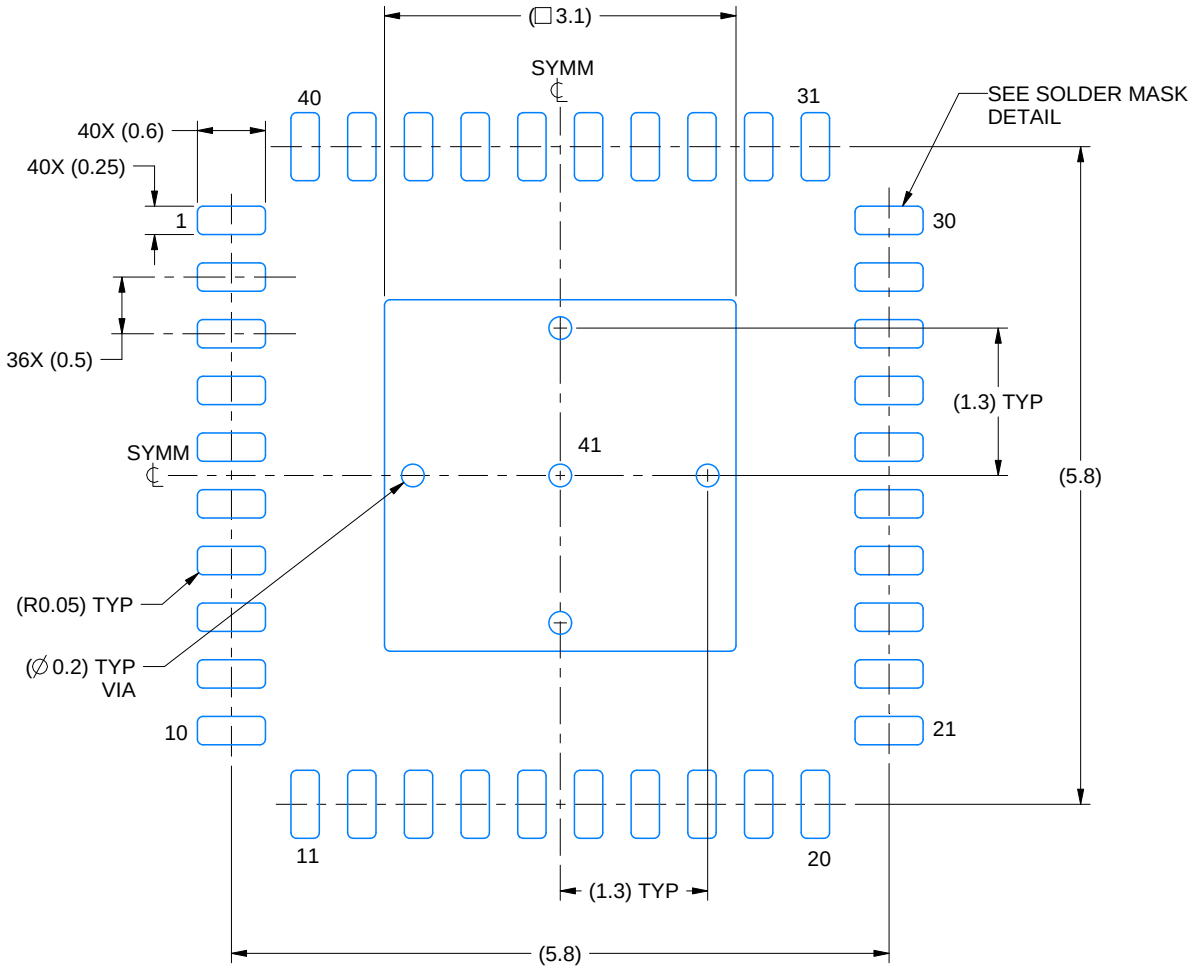

LAND PATTERN EXAMPLE
EXPOSED METAL SHOWN
SCALE: 15X

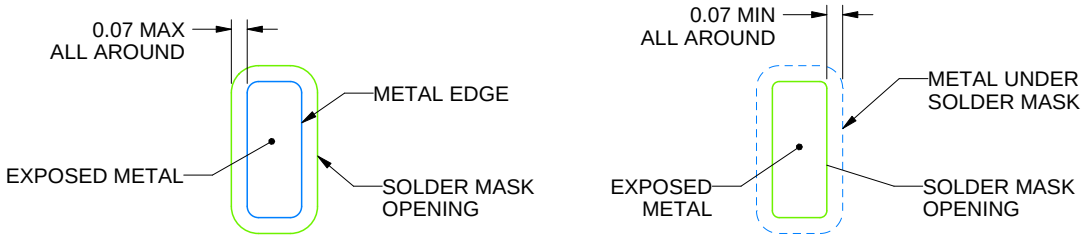

SOLDER MASK DETAILS

4233329/A 07/2026

NOTES: (continued)

4. This package is designed to be soldered to a thermal pad on the board. For more information, see Texas Instruments literature number SLUA271 (www.ti.com/lit/slua271).
5. Vias are optional depending on application, refer to device data sheet. If any vias are implemented, refer to their locations shown on this view. It is recommended that vias under paste be filled, plugged or tented.

EXAMPLE STENCIL DESIGN

RHA0040Y

VQFN - 1 mm max height

PLASTIC QUAD FLATPACK - NO LEAD

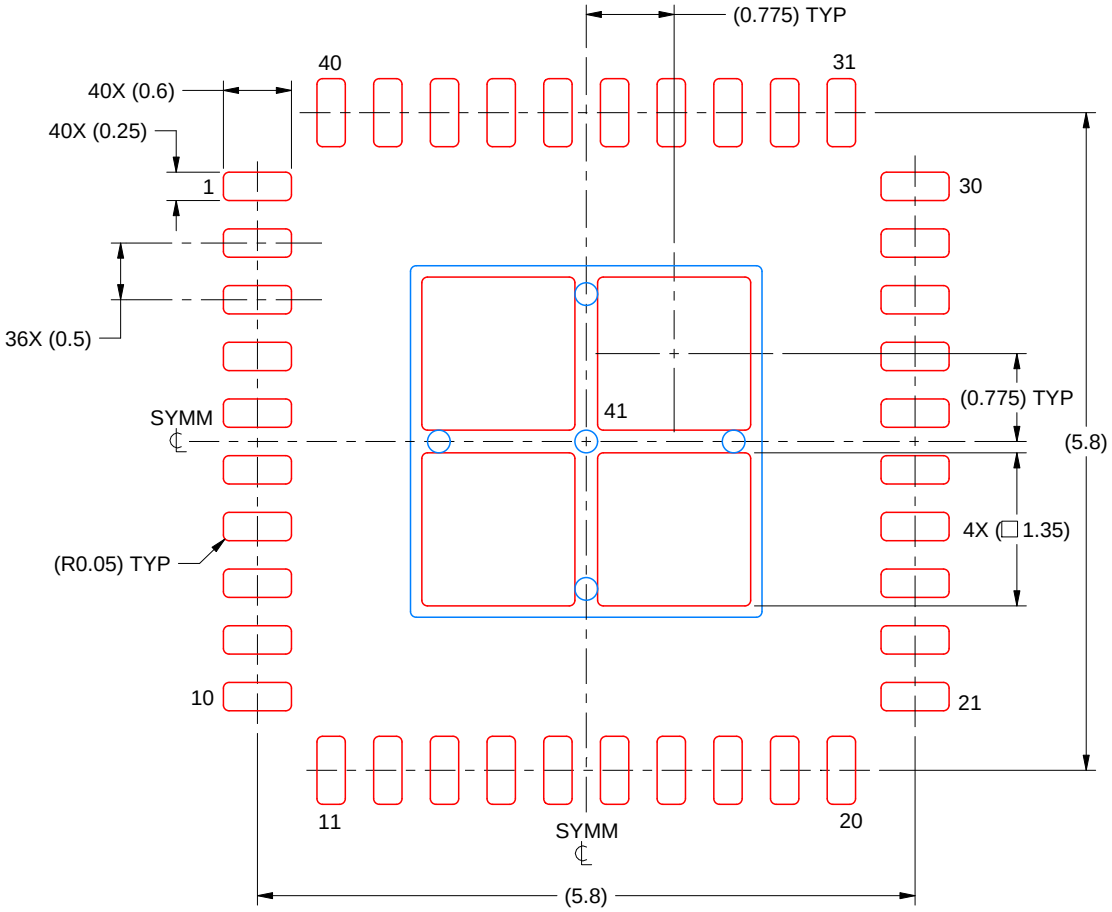

SOLDER PASTE EXAMPLE
BASED ON 0.125 MM THICK STENCIL
SCALE: 15X

EXPOSED PAD 41
76% PRINTED SOLDER COVERAGE BY AREA UNDER PACKAGE

4233329/A 07/2026

NOTES: (continued)

6. Laser cutting apertures with trapezoidal walls and rounded corners may offer better paste release. IPC-7525 may have alternate design recommendations.

DATA BOOK
PACKAGE OUTLINE

DRAFTER: K. SINCERBOX	DATE: 09/01/2022					DIMENSIONS IN MILLIMETERS	
DESIGNER:	DATE:	TEXAS INSTRUMENTS SEMICONDUCTOR OPERATIONS				CODE IDENTITY NUMBER 01295	
CHECKER: K. SINCERBOX	DATE: 09/01/2022						
ENGINEER: S. KUMMERL	DATE: 09/01/2022	ePOD, RHA0040R / VQFN, 40 PIN, 0.5 MM PITCH					
APPROVED: D. CHIN & D. KAN	DATE: 09/01/2022						
RELEASED: K. SINCERBOX	DATE: 09/01/2022						
TEMPLATE INFO: EDGE# 4218519	DATE: 04/07/2016	SCALE NTS	SIZE A	4229001		REV A	PAGE 1 OF 5

RHA0040R

PACKAGE OUTLINE

VQFN - 1 mm max height

PLASTIC QUAD FLATPACK - NO LEAD

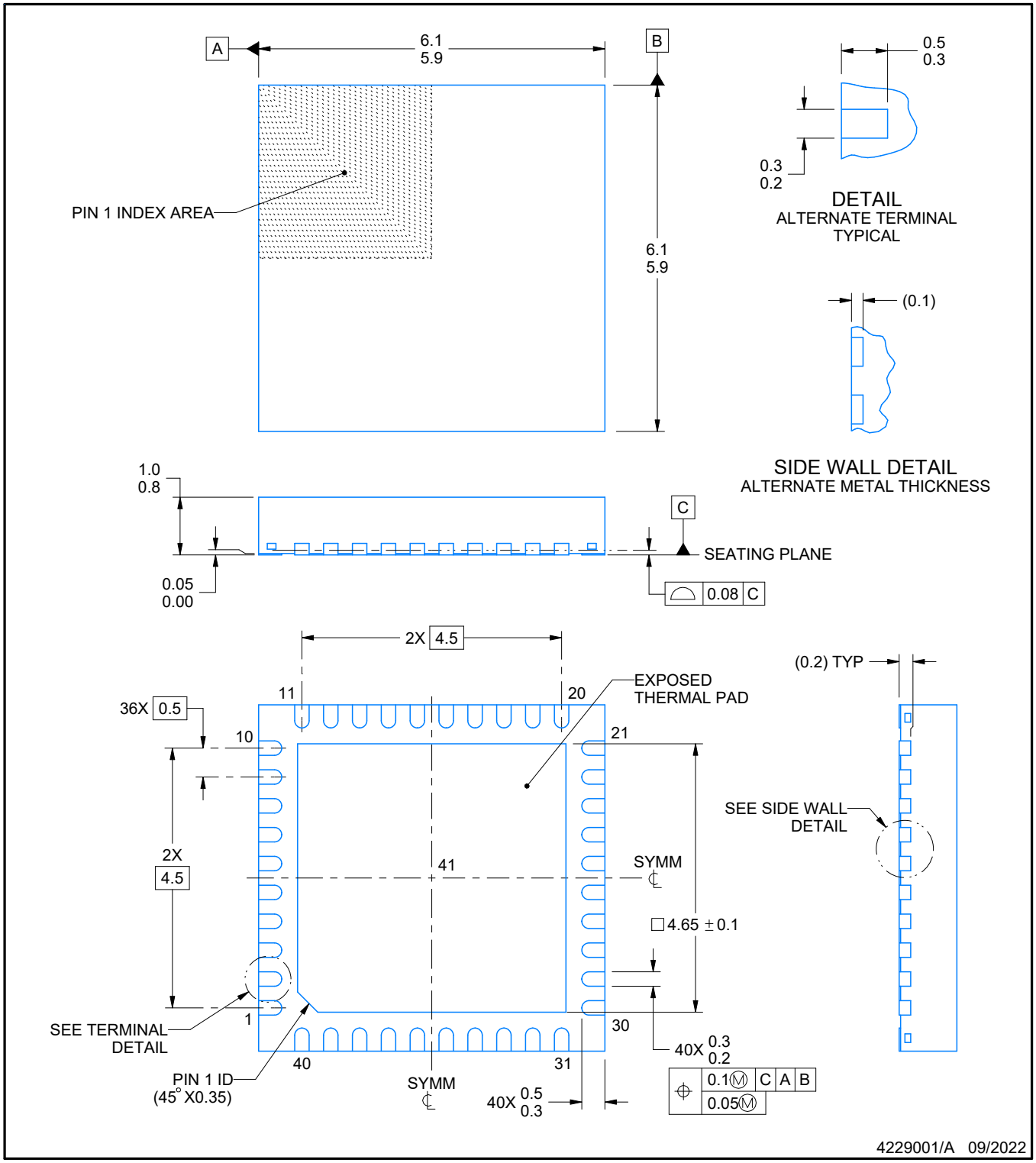

4229001/A 09/2022

NOTES:

1. All linear dimensions are in millimeters. Any dimensions in parenthesis are for reference only. Dimensioning and tolerancing per ASME Y14.5M.
2. This drawing is subject to change without notice.
3. The package thermal pad must be soldered to the printed circuit board for thermal and mechanical performance.

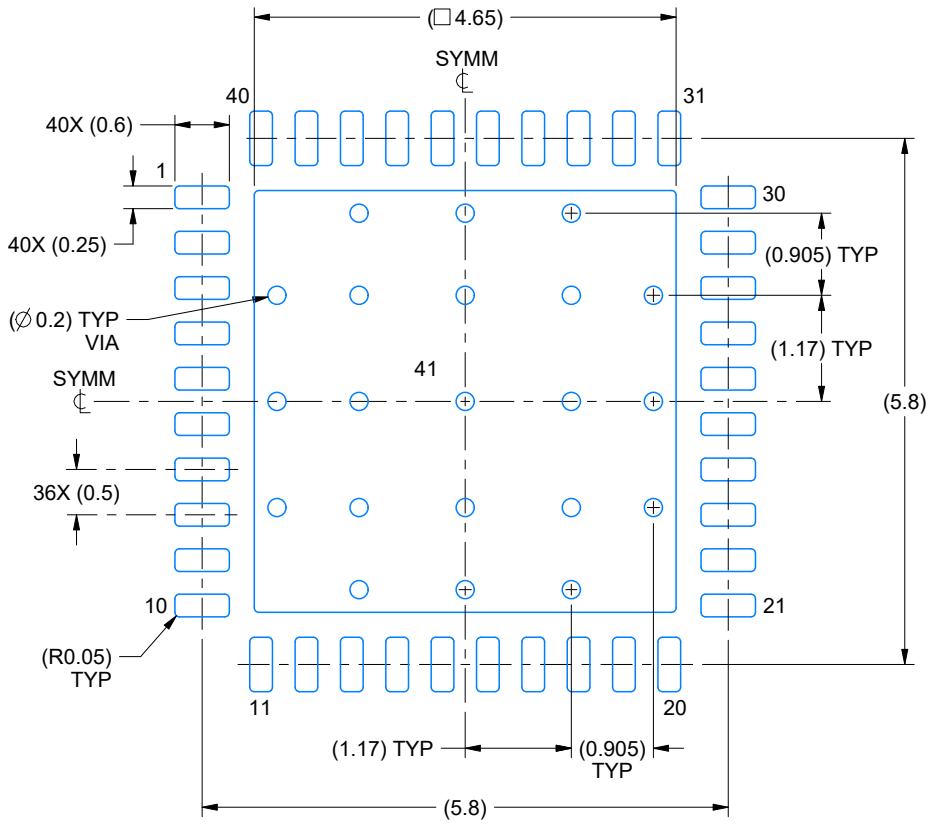

LAND PATTERN EXAMPLE
EXPOSED METAL SHOWN
SCALE:12X

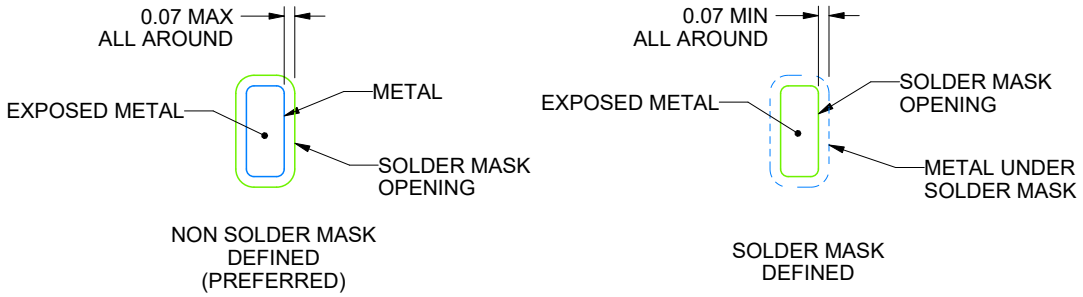

SOLDER MASK DETAILS

4229001/A 09/2022

NOTES: (continued)

4. This package is designed to be soldered to a thermal pad on the board. For more information, see Texas Instruments literature number SLUA271 (www.ti.com/lit/slua271).
5. Vias are optional depending on application, refer to device data sheet. If any vias are implemented, refer to their locations shown on this view. It is recommended that vias under paste be filled, plugged or tented.

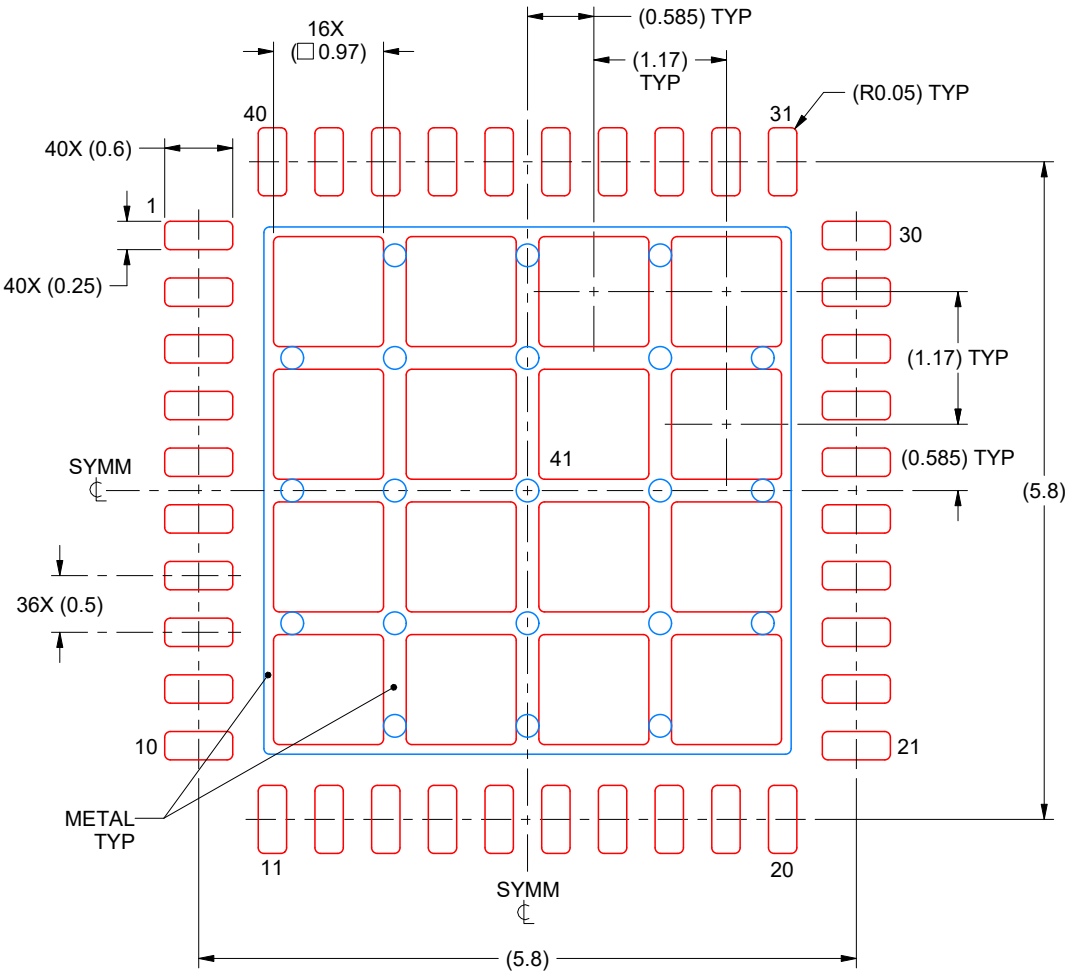

SOLDER PASTE EXAMPLE
BASED ON 0.125 mm THICK STENCIL

EXPOSED PAD 41:
69% PRINTED SOLDER COVERAGE BY AREA
SCALE:15X

4229001/A 09/2022

NOTES: (continued)

6. Laser cutting apertures with trapezoidal walls and rounded corners may offer better paste release. IPC-7525 may have alternate design recommendations.

REVISIONS

REV	DESCRIPTION	ECR	DATE	ENGINEER / DRAFTSMAN
A	RELEASE NEW DRAWING	2201054	09/01/2022	S. KUMMERL / K. SINCERBOX

重要通知和免责声明

TI“按原样”提供技术和可靠性数据（包括数据表）、设计资源（包括参考设计）、应用或其他设计建议、网络工具、安全信息和其他资源，不保证没有瑕疵且不做出任何明示或暗示的担保，包括但不限于对适销性、与某特定用途的适用性或不侵犯任何第三方知识产权的暗示担保。

这些资源可供使用 TI 产品进行设计的熟练开发人员使用。您将自行承担以下全部责任：(1) 针对您的应用选择合适的 TI 产品，(2) 设计、验证并测试您的应用，(3) 确保您的应用满足相应标准以及任何其他安全、安保法规或其他要求。

这些资源如有变更，恕不另行通知。TI 授权您仅可将这些资源用于研发本资源所述的 TI 产品的相关应用。严禁以其他方式对这些资源进行复制或展示。您无权使用任何其他 TI 知识产权或任何第三方知识产权。对于因您对这些资源的使用而对 TI 及其代表造成的任何索赔、损害、成本、损失和债务，您将全额赔偿，TI 对此概不负责。

TI 提供的产品受 TI 销售条款)、TI 通用质量指南 或 ti.com 上其他适用条款或 TI 产品随附的其他适用条款的约束。TI 提供这些资源并不会扩展或以其他方式更改 TI 针对 TI 产品发布的适用的担保或担保免责声明。 除非德州仪器 (TI) 明确将某产品指定为定制产品或客户特定产品，否则其产品均为按确定价格收入目录的标准通用器件。

TI 反对并拒绝您可能提出的任何其他或不同的条款。

版权所有 © 2026，德州仪器 (TI) 公司

最后更新日期：2025 年 10 月