Green-Mode PWM Controller with Hiccup Protection

Features

- Built-in 650V Power MOSFET
- Current Mode Control
- Standby Power below 75mW
- Under-Voltage Lockout (UVLO)
- Non-Audible-Noise Green-Mode Control
- 65KHz Switching Frequency
- Internal Leading-Edge Blanking
- Internal Slope Compensation
- Internal Soft Start
- Gate Output Voltage Clamp
- Jitter and Soft Driving for Reducing EMI
- Over-Load Protection (OLP)- Auto Recovery Mode
- Vcc OVP Protection- Auto Recovery Mode
- 300mA Driving Capability

Description

The GR1937E2 is a highly-integrated and high voltage power MOSFET of 650V. It can be used for 24W. The GR1937E2 has the features of low startup current, current mode PWM controller with green-mode function. The integrated functions also include the leading-edge blanking of the current sensing, internal slope compensation, soft start.

The GR1937E2 improves the performance and reduces the cost of power supplies. It is with 8-pin DIP package..

Application

- Battery Charger
- Open Frame SMPS
- Switching AC/DC Adapter

Typical Application Information

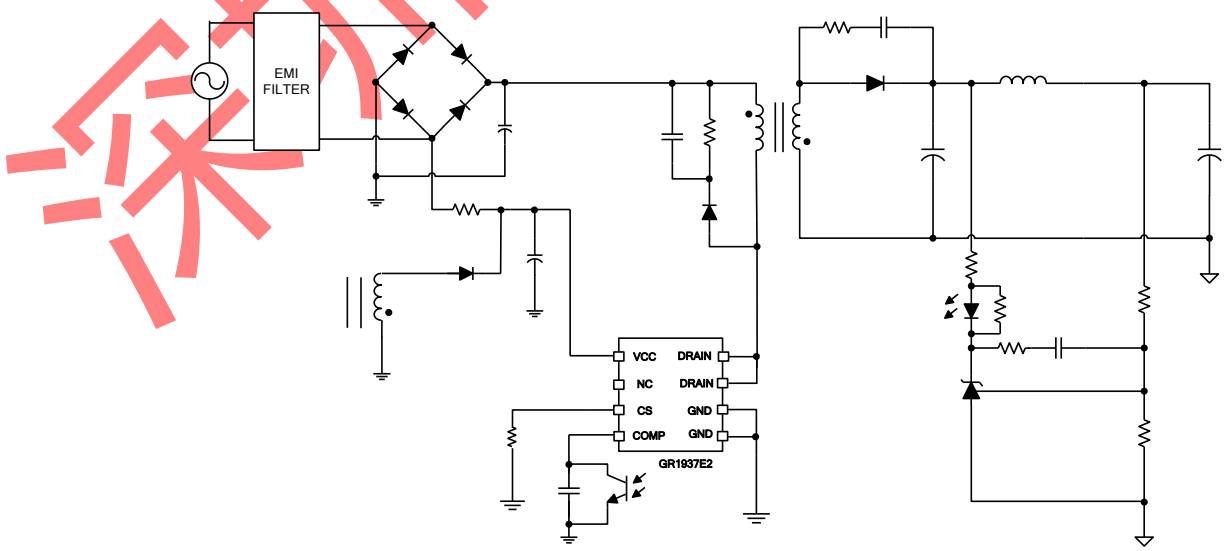

深圳立创ONLY

Ordering and Marking Information

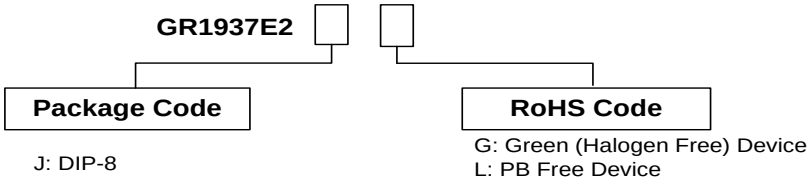

DIP-8

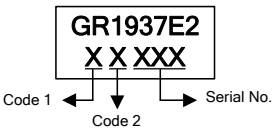

Code 1	8	9	A	B	...	G	H	I	J
Year	2008	2009	2010	2011		2016	2017	2018	2019
Code 2	1	2	3	4		9	A	B	C
Month	Jan.	Feb.	Mar.	Apr.		Sep.	Oct.	Nov.	Dec.

Nanjing Greenchip Semiconductor Co., Ltd. reserves the right to make changes to improve reliability or manufacture ability without notice, and advise customers to obtain the latest version of relevant information to verify before placing orders.

Pin Configuration

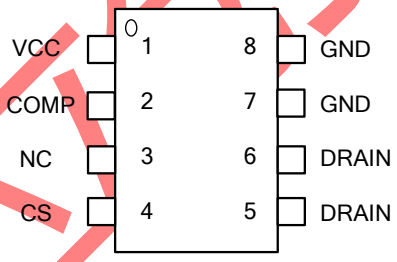

Pin Description

Pin No.	Name	Function
1	VCC	Power supply input for IC
2	COMP	Voltage feedback pin, by connecting a photo-coupler to control the duty cycle
3	NC	No connect
4	CS	Current sense pin
5,6	DRAIN	Drain of internal HV MOS
7,8	GND	Ground

深圳市公司ONLY

Absolute Maximum Ratings

Drain Voltage	-0.3V ~ 650V
Supply voltage VCC	30V
COMP, CS	-0.3 ~ 7V
OUT	-0.3 ~ VCC + 0.3V
Junction temperature	150℃
Operating ambient temperature	-20℃ ~ 85℃
Storage temperature range	-65℃ ~ 150 ℃
Power dissipation (DIP-8, at ambient temperature =85℃)	650mW
Lead temperature (All Pb free packages, soldering,10 sec)	260℃
ESD voltage protection, human body model	2KV
ESD voltage protection, machine model	200V

深圳立创ONLY

Electrical Characteristics (VCC = 15.0V & TA = +25℃, unless otherwise stated,)

Parameter	Pin	Min.	Typ.	Max.	Unit
SUPPLY VOLTAGE					
Startup Current (VCC=UVLO on – 0.1V)	1		8	15	uA
Operating Current (with 1nF load on OUT pin), Vcomp = 0V	1		800		uA
Operating Current (with 1nF load on OUT pin), Vcomp = 2.5V	1	1	2	3	mA
Operating Current (with 1nF load on OUT pin), Protection Tripped (OLP, OVP)	1	0.4	0.7	1	mA
UVLO(off)	1	6.2	6.8	7.4	V
UVLO(on)	1	10.6	11.3	12.0	V
OVP Level on VCC Pin –Auto Recovery Mode	1	27	28	29	V
VOLTAGE FEEDBACK					
Short Circuit Current, Vcomp = 0V	2	0.2			mA
Open Loop Voltage, COMP Pin Open	2	4.4		5.5	V
Green-Mode threshold Voltage	2		1.4		V
Burst Mode Start Voltage	2		0.85		V
CURRENT SENSING					
Maximum Input Voltage, Vcs(off)- Auto Recovery Mode	4	0.80	0.85	0.9	V
Leading-Edge Blanking Time	4		500		nS
Input Impedance	4	1			MΩ
Delay to Output	4		100		nS
OSCILLATOR					
Operating Frequency	-	60	65	70	KHz
Jitter Frequency	-		±6		%
Green Mode Frequency	-	20	22	25	KHz
Temp. Stability (-40°C ~ 110°C)	-			5	%
Voltage Stability (VCC = 11V~25V)	-			3	%
OLP SECTION					
OLP Trip Level, Vcomp (OLP)	-		3.5		V
OLP Delay Time	-		60		mS
PWM SECTION					
Maximum Duty Cycle	-	70	75	80	%
MOSFET SECTION					
BVdss Vgs=0	5 & 6	650			V
Rds (on)	5 & 6			1.3	Ω

深圳立创ONLY

Application Information

Start-up Current

The typical start-up current is around 8uA. Very low start-up current allows the PWM controller to increase the value of start-up resistor and then reduce the power dissipation on it.

UVLO (Under Voltage Lockout)

A hysteresis UVLO comparator is implemented in the GR1937E2 Then turn-on and turn-off thresholds level are fixed at 11.3V and 6.8V respectively. This hysteresis shown in Fig.9 ensures that the start-up capacitor will be adequate to supply the chip during start-up.

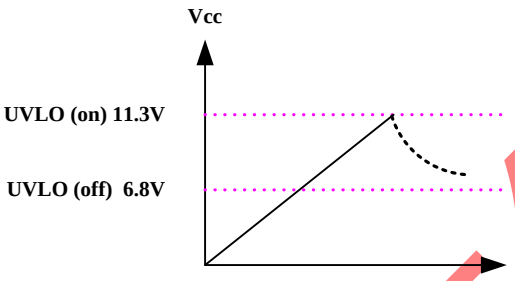

Fig.9

Soft Start

During initial power on, the GR1937E2 provides soft start function. It effectively suppresses the start up peak current to reduce the power MOSFET drain voltage especially at high line.

Oscillator

The maximum duty-cycle of internal oscillator is limited to 75% for avoiding the transformer saturation. The frequency of the oscillator is fixed to 65KHz by internal setting.

Green-Mode Operation

When the load decreases to an extent, the frequency of the controller will decrease so as to reduce the system power consumption. The minimum frequency is about 22 KHz, which is outside the audio range.

LEB (Leading-Edge Blanking)

Each time the power MOSFET is switched on, a turn-on spike will inevitably occur at the sense resistor. To avoid fault trigger, a 500ns leading-edge blanking time is built in. During this blanking period, the current-limit comparator is disabled and cannot switch off the gate driver.

Internal Slope Compensation

Built-in slope compensation circuit adds voltage ramp in the current sense input voltage for PWM generation. This greatly improves the close loop stability at CCM and prevents the sub-harmonic oscillation and thus reduces the output ripple voltage.

超载保护 OLP (Over Load Protection)

The GR1937E2 has over load protection function. An internal circuit detects the load level, when the load is larger than a threshold level and the condition lasts more than 60ms, the gate output will keep on low level. Then VCC decreases below UVLO off level, the controller resets again. Fig.10 shows the waveform of the OLP operation.

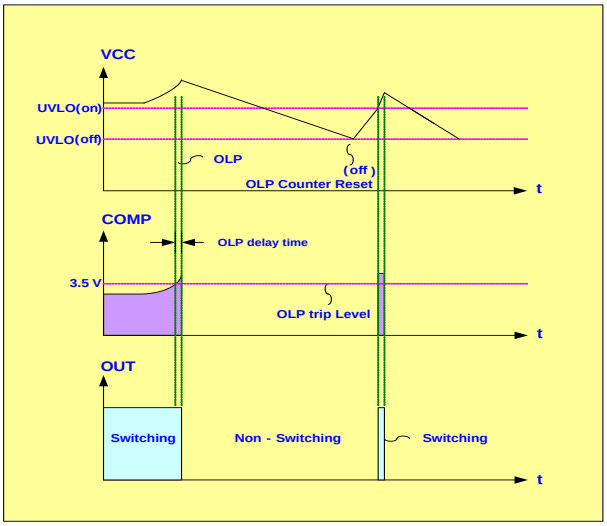

Fig. 10

深圳立创ONLY

OVP (Over Voltage Protection) on VCC

To prevent power MOSFET from being damaged, the GR1937E2 is implemented an OVP function on VCC. When the VCC voltage is higher than the OVP threshold voltage, the output gate driver circuit will be shut down immediately to stop the switching of power MOSFET. The VCC pin OVP function is an Auto-recovery type protection. GR1937E2 is working in Hiccup mode as shown in Fig. 11.

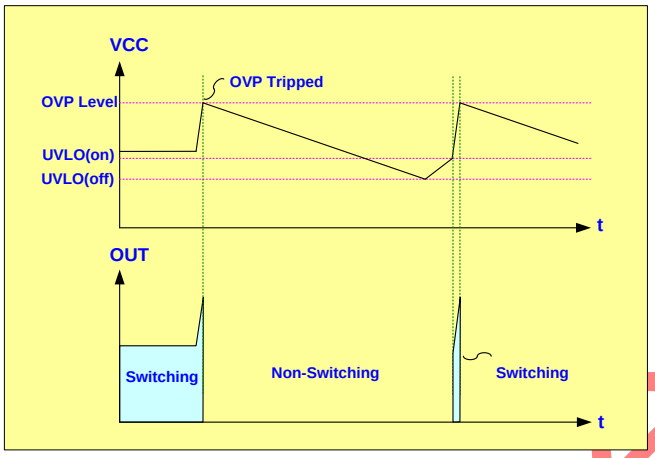

Fig. 11

VCC Mode Operation

In order to avoid the output voltage shut down by load changing from full to no load, the GR1937E2 is built-in the VCC mode function. When the load from full changes to no load, the output voltage will overshoot and pull low the COMP pin by feedback loop. Thus the duty will disappear and no power delivers to the secondary. If there is without any mechanism to prevent this situation, the VCC pin voltage will down to UVLO off and the IC will re-start again. In the GR1937E2, before the VCC is down to UVLO off, it will force the OUT pin outputs the specified duty to pull the VCC higher than UVLO off. The operation is shown in Fig.12.

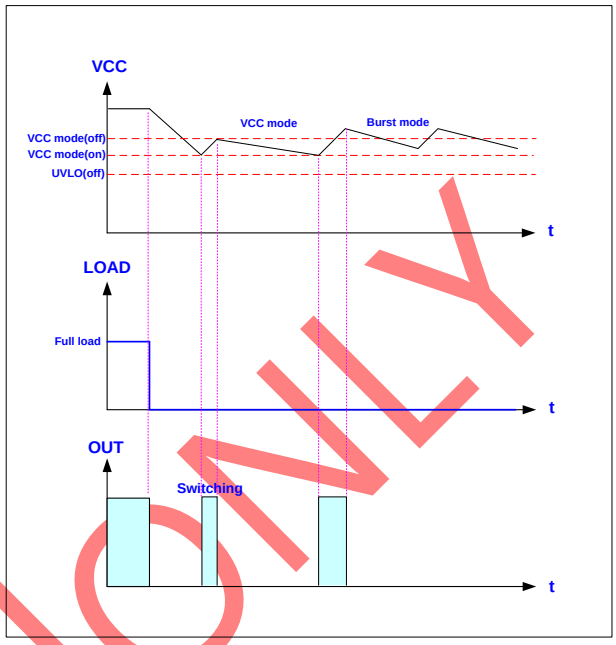

Fig. 12

The VCC mode function is used to prevent the output re-start again when load changes. So never let the system operate on the VCC mode at no load. The system should operate on burst mode, otherwise the input power maybe become larger.

深圳立创ONLY

Package Information

DIP-8

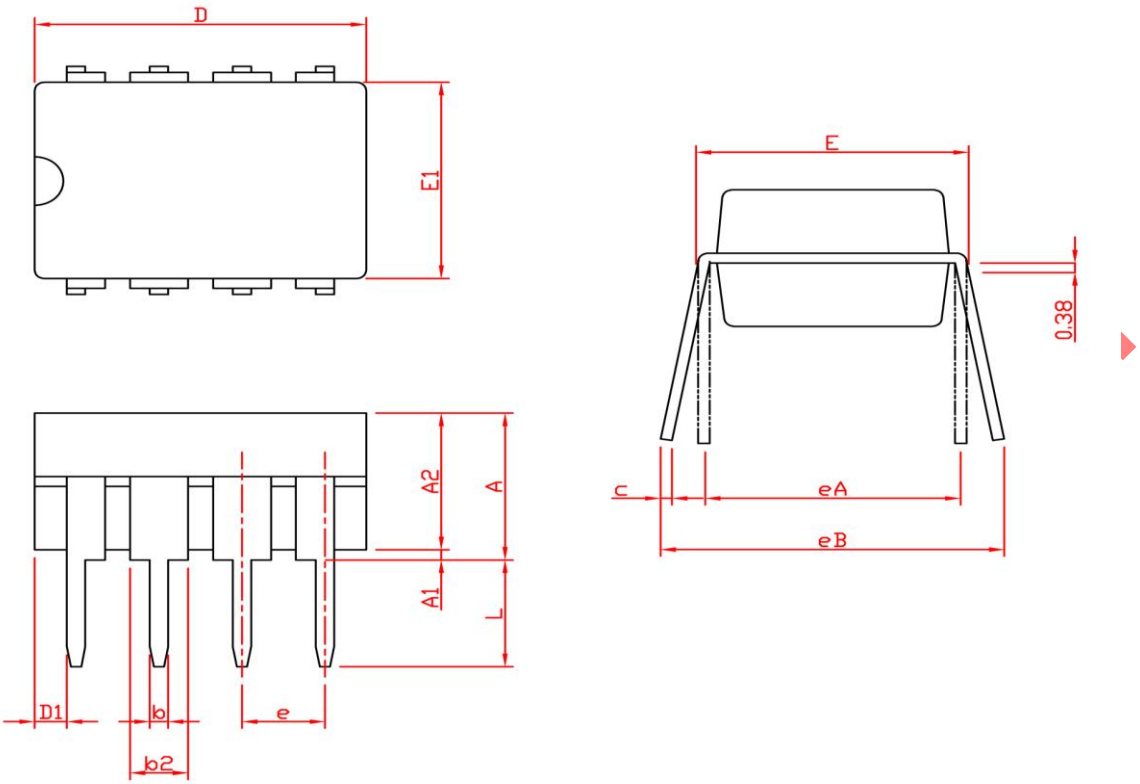

SYMBOL	DIP-8			
	MILLIMETERS		INCHES	
	MIN.	MAX.	MIN.	MAX.
A		5.33		0.210
A1	0.38		0.015	
A2	2.92	4.95	0.115	0.195
b	0.36	0.56	0.014	0.022
b2	1.14	1.78	0.045	0.070
c	0.20	0.35	0.008	0.014
D	9.01	10.16	0.355	0.400
D1	0.13		0.005	
E	7.62	8.26	0.300	0.325
E1	6.10	7.11	0.240	0.280
e	2.54 BSC		0.100 BSC	
eA	7.62 BSC		0.300 BSC	
eB		10.92		0.430
L	2.92	3.81	0.115	0.150

Note: 1. Followed from JEDEC MS-001 BA.

2. Dimension D, D1 and E1 do not include mold flash or protrusions. Mold flash or protrusions shall not exceed 10 mil.

 Copyright Nanjing Greenchip Semiconductor Co., Ltd.