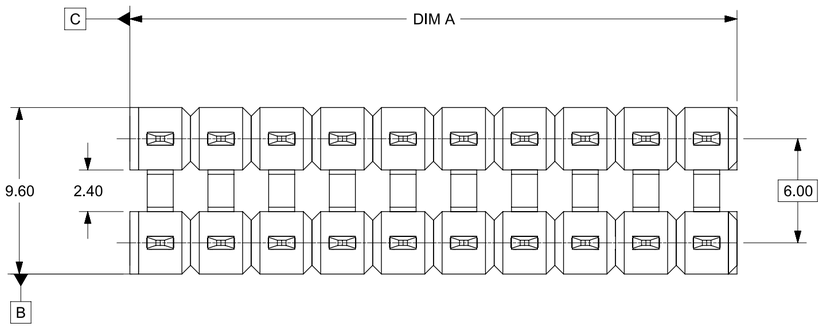

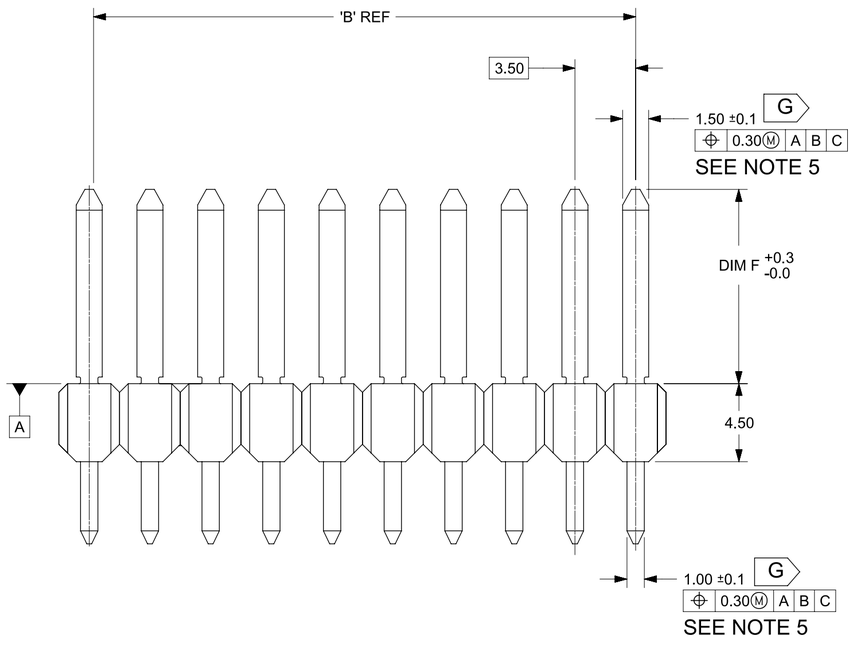

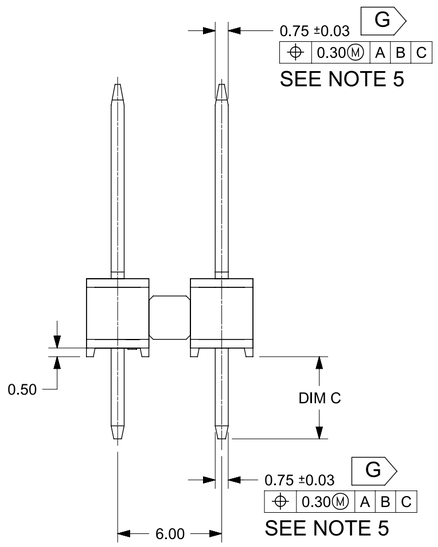

NOTES:

1. TERMINAL MAT'L: ALLOY C26000, CARTRIDGE BRASS
2. WAFER MAT'L: 30% GLASS FILLED LCP, 94V-0, COLOR BLACK.
3. TERMINAL PLATING:
   OPTION 4 - 1.5µm MIN MATTE TIN OVERALL OVER 1.25µm NICKEL OVERALL
   OPTION 1 - 2.5µm MIN MATTE TIN OVERALL OVER 1.25µm NICKEL OVERALL
   OPTION 2 - 1.25m NICKEL OVERALL 2.5µm MIN SELECT MATTE TIN PC TAIL
   AREA 0.05-0.25µm SELECT GOLD CONTACT AREA
   OPTION 3 - 1.25m NICKEL OVERALL 2.5µm MIN SELECT MATTE TIN PC TAIL
   AREA 0.75µm SELECT GOLD CONTACT AREA
4. HEADER ASSEMBLIES ARE TUBE PACKAGED PER PK-36518-340.
5. ALL THE POSITIONAL TOLERANCES SHOULD BE MEASURED AT TIP OF THE TERMINALS.
6. DATUMS SHOULD BE CONSIDERED FROM THE EDGES OF THE HOUSING.
7. POSITION TOLERANCE OF PIN AT MATING SIDE SHOULD BE MAINTAINED AT 0.3MM IN THE FINAL MODULE BY CUSTOMER.
8. G DENOTES DIMENSIONS THAT CAN BE QUALIFIED WITH A GAUGE
9. BLADE GEOMETRY DOES NOT CONFORM TO USCAR SPECIFICATIONS
10. PLEASE REFER USCAR WEBSITE FOR 1.5mm DIRECT CONNECT INTERFACE (SHROUD) DETAILS
11. PLEASE REFER SD-33472-0001 FOR 2 X 10 SHROUD DETAILS.

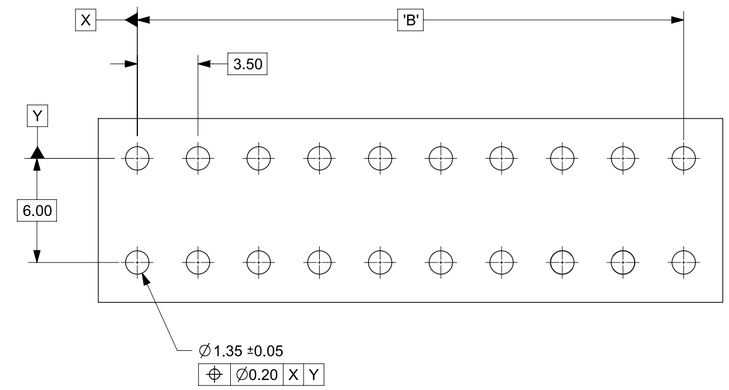

RECOMMENDED PCB LAYOUT

THIS DRAWING CONTAINS INFORMATION THAT IS PROPRIETARY TO MOLEX ELECTRONIC TECHNOLOGIES, LLC AND SHOULD NOT BE USED WITHOUT WRITTEN PERMISSION

DIMENSION UNITS	SCALE
mm	4:1

GENERAL TOLERANCES (UNLESS SPECIFIED)

ANGULAR TOL	± 0.5°
4 PLACES	±
3 PLACES	±
2 PLACES	± 0.130
1 PLACE	± 0.25
0 PLACES	±

DRAFT WHERE APPLICABLE MUST REMAIN WITHIN DIMENSIONS

CURRENT REV DESC: REMOVED OBSOLETED PART NUMBER AS PER PCN#515181.

STATUS: Production
DRWN: Ravindra Reddy MS 2024-07-19
CHK'D: Ganesh Rao B 2024-08-14
APPR: Gurunandan GA 2024-08-14

molex

MX150 DUAL ROW
UNSHROUDED VERTICAL HEADER ASSEMBLY

PRODUCT CUSTOMER DRAWING

DOCUMENT NUMBER	DOC TYPE	DOC PART	REVISION
SD-75757-002	PSD	001	G6

THIRD ANGLE PROJECTION	DRAWING	SERIES	MATERIAL NUMBER	CUSTOMER	SHEET NUMBER
	A2-SIZE	75757	SEE TABLE	GENERAL MARKET	1 OF 2

FORMAT: TC4b-prod-A2
REVISION: B
DATE: 2022/08/01

CKT SIZE	PLATING OPTION	MATERIAL NUMBER	"C" DIM	"F" DIM	MATERIAL NUMBER	"C" DIM	"F" DIM	"A" DIM	"B" DIM
2 x 2	1	75757-5121	3.05	16.09	75757-1121	3.05	11.20	7.0	3.50 REF
	2	----------			75757-1221				
	4	75757-5421			----------				
2 x 3	1	75757-5131			75757-1131			10.5	7.00
	4	75757-5431			75757-1431				
2 x 4	1	75757-5141			----------			14.0	10.50
	2	75757-5241			75757-1241				
	4	75757-5441			75757-1441				
2 x 6	1	----------			75757-1161			21.0	17.50
	2	75757-5261			75757-1261				
	3	75757-5361			----------				
	4	75757-5461			75757-1461				
2 x 8	1	----------			75757-1181			28.0	24.50
	3	75757-5381			----------				
	4	75757-5481			75757-1481				
2 x 10	1	75757-5101			75757-1101			35.0	31.50
	2	75757-5201			----------				
	3	75757-5301			----------				
	4	75757-5401			75757-1401				

THIS DRAWING CONTAINS INFORMATION THAT IS PROPRIETARY TO MOLEX ELECTRONIC TECHNOLOGIES, LLC AND SHOULD NOT BE USED WITHOUT WRITTEN PERMISSION

DIMENSION UNITS	SCALE
mm	1:1

GENERAL TOLERANCES (UNLESS SPECIFIED)

ANGULAR TOL	± 0.5°
4 PLACES	±
3 PLACES	±
2 PLACES	± 0.130
1 PLACE	± 0.25
0 PLACES	±

DRAFT WHERE APPLICABLE MUST REMAIN WITHIN DIMENSIONS

CURRENT REV DESC: REMOVED OBSOLETED PART NUMBER AS PER PCN#515181.

STATUS: Production

DRWN:	Ravindra Reddy MS	2024-07-19
CHK'D:	Ganesh Rao B	2024-08-14
APPR:	Gurunandan GA	2024-08-14

molex

MX150 DUAL ROW
UNSHROUDED VERTICAL HEADER ASSEMBLY

PRODUCT CUSTOMER DRAWING

DOCUMENT NUMBER	DOC TYPE	DOC PART	REVISION
SD-75757-002	PSD	001	G6

THIRD ANGLE PROJECTION	DRAWING	SERIES	MATERIAL NUMBER	CUSTOMER	SHEET NUMBER
	A2-SIZE	75757	SEE TABLE	GENERAL MARKET	2 OF 2

FORMAT: TC-dvprod-A2
REVISION: B
DATE: 2022/08/01