# PC923L0NSZ Series

## High Speed, Gate Drive DIP 8 pin *OPIC Photocoupler

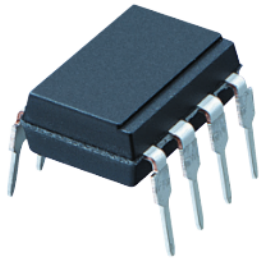

## ■ Description

**PC923L0NSZ Series** contains a LED optically coupled to an OPIC chip.

It is packaged in a 8 pin DIP, available in SMT gullwing lead form option.

Input-output isolation voltage(rms) is 5.0 kV, High speed response ($t_{PHL}$, $t_{PLH}$ : MAX. 0.5 μs).

## ■ Features

1. 8 pin DIP package
2. Double transfer mold package (Ideal for Flow Soldering)
3. Built-in direct drive circuit for MOSFET / IGBT drive ($I_{O1P}$, $I_{O2P}$ : 0.6 A)
4. High speed response ($t_{PHL}$, $t_{PLH}$ : MAX. 0.5 μs)
5. Wide operating supply voltage range ($V_{CC}$=15 to 30 V)
6. High noise immunity due to high instantaneous common mode rejection voltage ($CM_H$ : MIN. −15kV/μs, $CM_L$ : MIN. 15kV/μs)
7. High isolation voltage between input and output ($V_{iso(rms)}$ : 5.0 kV)

## ■ Agency approvals/Compliance

1. Recognized by UL1577 (Double protection isolation), file No. E64380 (as model No. **PC923L**)
2. Approved by VDE (VDE0884) (as an option), file No. 87446 (as model No. **PC923L**)
3. Package resin : UL flammability grade (94V-0)

## ■ Applications

1. IGBT/MOSFET gate drive for inverter control

* "OPIC"(Optical IC) is a trademark of the SHARP Corporation. An OPIC consists of a light-detecting element and a signal-processing circuit integrated onto a single chip.

Notice The content of data sheet is subject to change without prior notice.
In the absence of confirmation by device specification sheets, SHARP takes no responsibility for any defects that may occur in equipment using any SHARP devices shown in catalogs, data books, etc. Contact SHARP in order to obtain the latest device specification sheets before using any SHARP device.



Sheet No.: D2-A06001EN
Date Nov. 28. 2003
© SHARP Corporation

## ■ Internal Connection Diagram

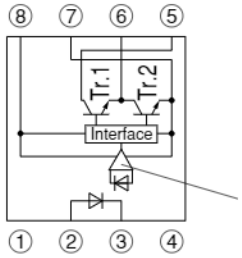


① NC ⑤ $O_1$
② Anode ⑥ $O_2$
③ Cathode ⑦ GND
④ NC ⑧ $V_{CC}$

## ■ Truth table

| Input | $O_2$ Terminal output | Tr. 1 | Tr. 2 |
|---|---|---|---|
| ON | High level | ON | OFF |
| OFF | Low level | OFF | ON |

## ■ Outline Dimensions

(Unit : mm)

1. Through-Hole [ex. **PC923L0NSZ**]

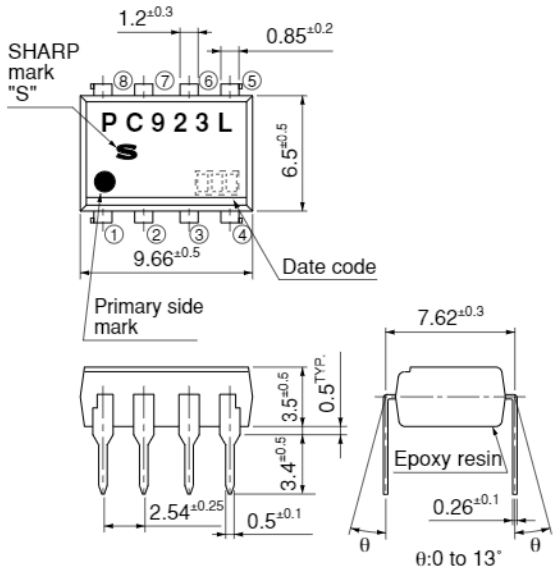


2. Through-Hole (VDE0884 option) [ex. **PC923L0YSZ**]

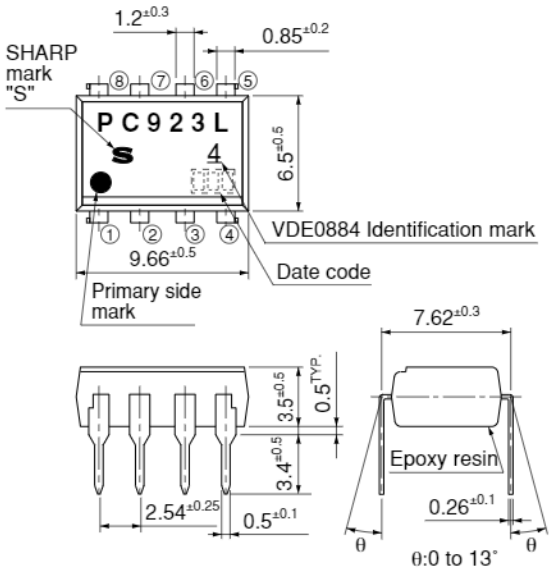

(Unit : mm)

3. SMT Gullwing Lead-Form [ex. **PC923L0NIP**]

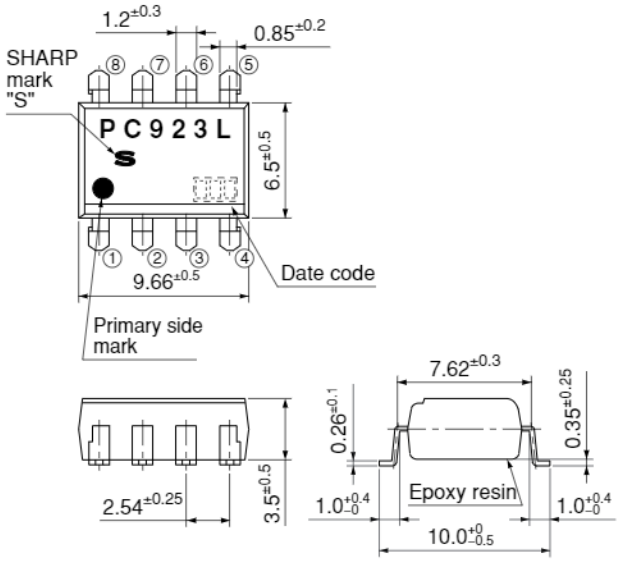


4. SMT Gullwing Lead-Form (VDE0884 option) [ex. **PC923L0YIP**]

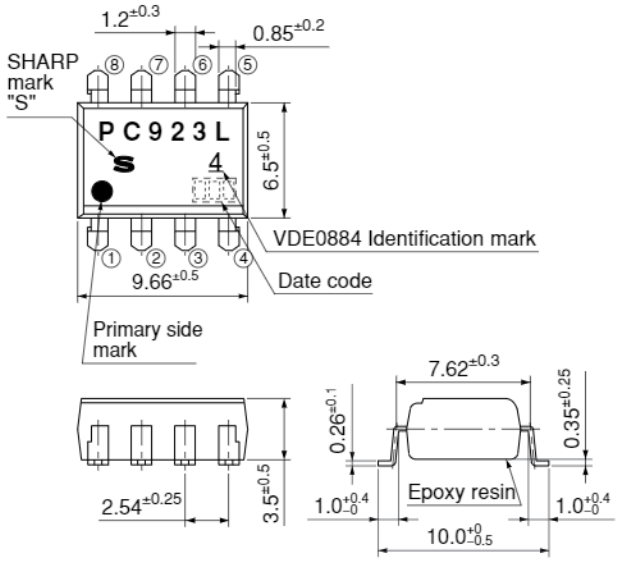


Product mass : approx. 0.55g

## Date code (3 digit)

| 1st digit | | | | 2nd digit | | 3rd digit | |
|---|---|---|---|---|---|---|---|
| Year of production | | | | Month of production | | Week of production | |
| A.D. | Mark | A.D | Mark | Month | Mark | Week | Mark |
| 1990 | A | 2002 | P | January | 1 | 1st | 1 |
| 1991 | B | 2003 | R | February | 2 | 2nd | 2 |
| 1992 | C | 2004 | S | March | 3 | 3rd | 3 |
| 1993 | D | 2005 | T | April | 4 | 4th | 4 |
| 1994 | E | 2006 | U | May | 5 | 5.6th | 5 |
| 1995 | F | 2007 | V | June | 6 | | |
| 1996 | H | 2008 | W | July | 7 | | |
| 1997 | J | 2009 | X | August | 8 | | |
| 1998 | K | 2010 | A | September | 9 | | |
| 1999 | L | 2011 | B | October | O | | |
| 2000 | M | 2012 | C | November | N | | |
| 2001 | N | ⋮ | ⋮ | December | D | | |

repeats in a 20 year cycle

## Country of origin

Japan

## ■ Absolute Maximum Ratings

($T_a$=25°C)

| Parameter | | Symbol | Rating | Unit |
|---|---|---|---|---|
| Input | *1 Forward current | $I_F$ | 20 | mA |
| | Reverse voltage | $V_R$ | 5 | V |
| Output | Supply voltage | $V_{CC}$ | 35 | V |
| | $O_1$ output current | $I_{O1}$ | 0.1 | A |
| | *2 $O_1$ Peak output current | $I_{O1P}$ | 0.6 | A |
| | $O_2$ output current | $I_{O2}$ | 0.1 | A |
| | *2 $O_2$ Peak output current | $I_{O2P}$ | 0.6 | A |
| | $O_1$ output voltage | $V_{O1}$ | 35 | V |
| | *3 Power dissipation | $P_O$ | 500 | mW |
| *4 Total power dissipation | | $P_{tot}$ | 550 | mW |
| *5 Isolation voltage | | $V_{iso\ (rms)}$ | 5.0 | kV |
| Operating temperature | | $T_{opr}$ | −40 to +85 | °C |
| Storage temperature | | $T_{stg}$ | −55 to +125 | °C |
| *6 Soldering temperature | | $T_{sol}$ | 270 | °C |

*1 The derating factors of a absolute maximum ratings due to ambient temperature are shown in Fig.10
*2 Pulse width≤0.15μs, Duty ratio : 0.01
*3, 4 The derating factors of a absolute maximum ratings due to ambient temperature are shown in Fig.11
*5 AC for 1minute, 40 to 60 %RH, f=60Hz
*6 For 10s

## ■ Electro-optical Characteristics*7

(Unless otherwise specified $T_a$=$T_{opr}$)

| | Parameter | | Symbol | Conditions | MIN. | TYP. | MAX. | Unit |
|---|---|---|---|---|---|---|---|---|
| Input | Forward voltage | | $V_{F1}$ | $T_a$=25°C, $I_F$=10mA | − | 1.6 | 1.75 | V |
| | | | $V_{F2}$ | $T_a$=25°C, $I_F$=0.2mA | 1.2 | 1.5 | − | V |
| | Reverse current | | $I_R$ | $T_a$=25°C, $V_R$=5V | − | − | 10 | μA |
| | Terminal capacitance | | $C_t$ | $T_a$=25°C, V=0, f=1MHz | − | 60 | 150 | pF |
| Output | Supply voltage | | $V_{CC}$ | − | 15 | − | 30 | V |
| | $O_1$ Low level output voltage | | $V_{O1L}$ | $V_{CC1}$=12V, $V_{CC2}$=−12V, $I_{O1}$=0.1A, $I_F$=5mA | − | 0.2 | 0.4 | V |
| | $O_2$ High level output voltage | | $V_{O2H}$ | $V_{CC}$=$V_{O1}$=24V, $I_{O2}$=−0.1A, $I_F$=5mA | 20 | 22 | − | V |
| | $O_2$ Low level output voltage | | $V_{O2L}$ | $V_{CC}$=24V, $I_{O2}$=0.1A, $I_F$=0 | − | 0.5 | 0.8 | V |
| | $O_1$ leak current | | $I_{O1L}$ | $V_{CC}$=$V_{O1}$=35V, $I_F$=0 | − | − | 500 | μA |
| | $O_2$ leak current | | $I_{O2L}$ | $V_{CC}$=$V_{O2}$=35V, $I_F$=5mA | − | − | 500 | μA |
| | *9 High level supply current | | $I_{CCH}$ | $V_{CC}$=24V, $I_F$=5mA | − | 1.3 | 3.0 | mA |
| | *9 Low level supply current | | $I_{CCL}$ | $V_{CC}$=24V, $I_F$=0 | − | 1.3 | 3.0 | mA |
| Transfer characteristics | *8 "Low→High" input threshold current | | $I_{FLH}$ | $T_a$=25°C, $V_{CC}$=24V | 0.3 | 1.5 | 3.0 | mA |
| | | | | $V_{CC}$=24V | 0.2 | − | 5.0 | mA |
| | Isolation resistance | | $R_{ISO}$ | $T_a$=25°C, DC500V, 40 to 60%RH | $5\times10^{10}$ | $10^{11}$ | − | Ω |
| | Response time | "Low→High" propagation delay time | $t_{PLH}$ | $T_a$=25°C, $V_{CC}$=24V, $I_F$=5mA, $R_G$=47Ω, $C_G$=3 000pF | − | 0.3 | 0.5 | μs |
| | | "High→Low" propagation delay time | $t_{PHL}$ | | − | 0.3 | 0.5 | μs |
| | | Rise time | $t_r$ | | − | 0.2 | 0.5 | μs |
| | | Fall time | $t_f$ | | − | 0.2 | 0.5 | μs |
| | Instantaneous common mode rejection voltage (High level output) | | $CM_H$ | $T_a$=25°C, $V_{CM}$=1.5kV$_{(p-p)}$, $I_F$=5mA, $V_{CC}$=24V, $\Delta V_{O2H}$=2.0V | -15 | − | − | kV/μs |
| | Instantaneous common mode rejection voltage (Low level output) | | $CM_L$ | $T_a$=25°C, $V_{CM}$=1.5kV$_{(p-p)}$, $I_F$=0, $V_{CC}$=24V, $\Delta V_{O2L}$=2.0V | 15 | − | − | kV/μs |

*7 It shall connect a by-pass capacitor of 0.01μF or more between $V_{CC}$ (pin ⑧) and GND (pin ⑦) near the device, when it measures the transfer characteristics and the output side characteristics
*8 $I_{FLH}$ represents forward current when output goes from "Low" to "High"  *9 $O_2$ output terminal is set open

## ■ Model Line-up

| Lead Form | Through-Hole | | SMT Gullwing | | | |
|---|---|---|---|---|---|---|
| Package | Sleeve | | | | Taping | |
| | 50pcs/sleeve | | | | 1 000pcs/reel | |
| VDE0884 | ——— | Approved | ——— | Approved | ——— | Approved |
| Model No. | PC923L0NSZ | PC923L0YSZ | PC923L0NIZ | PC923L0YIZ | PC923L0NIP | PC923L0YIP |

Please contact a local SHARP sales representative to inquire about production status and Lead-Free options.

## Fig.1 Test Circuit for $O_1$ Low Level Output Voltage

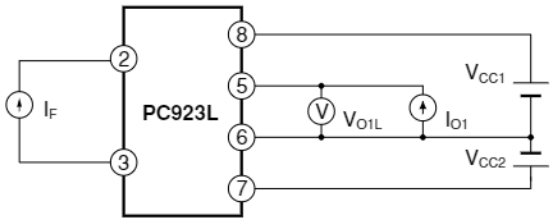


## Fig.2 Test Circuit for $O_2$ High Level Output Voltage

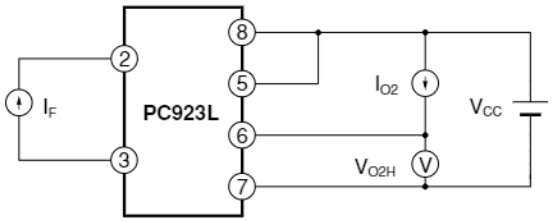


## Fig.3 Test Circuit for $O_2$ Low Level Output Voltage

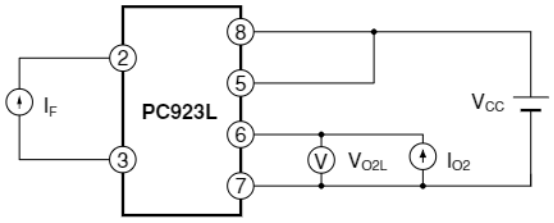


## Fig.4 Test Circuit for $O_1$ Leak Current

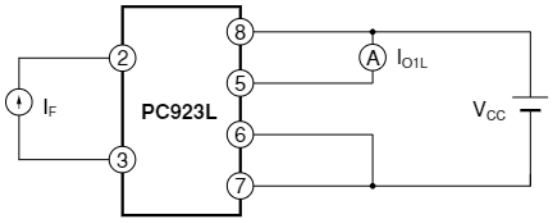


## Fig.5 Test Circuit for $O_2$ Leak Current

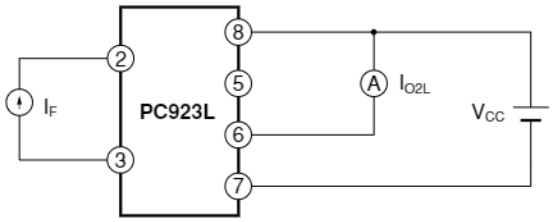


## Fig.6 Test Circuit for High Level / Low Level Supply Current

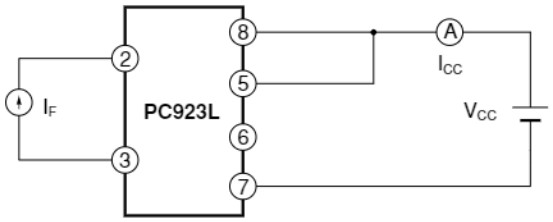

## Fig.7 Test Circuit for "Low→High" Input Threshold Current

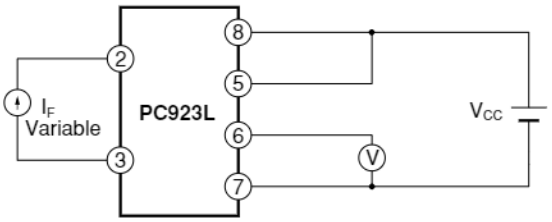


## Fig.8 Test Circuit for Response Time

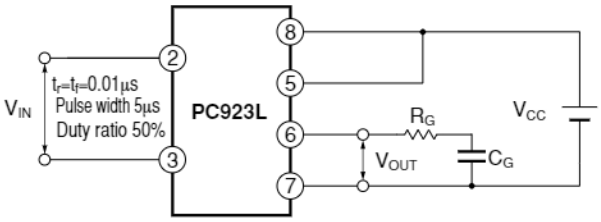


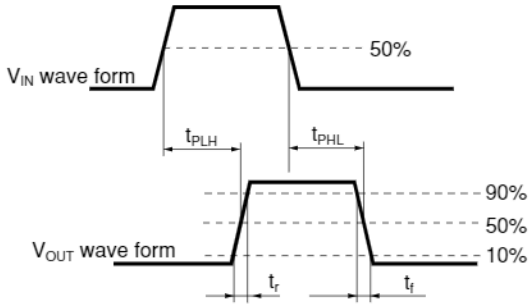


## Fig.9 Test Circuit for Instantaneous Common Mode Rejection Voltage

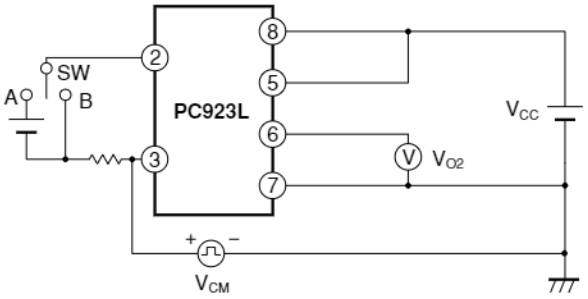


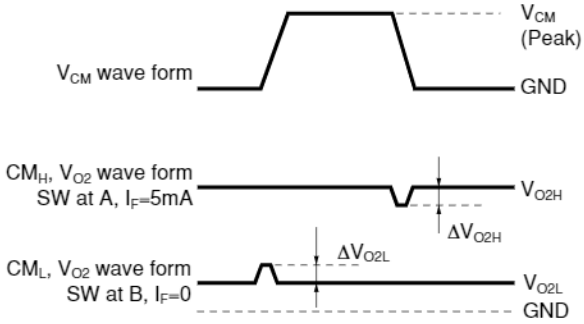

## Fig.10 Forward Current vs. Ambient Temperature

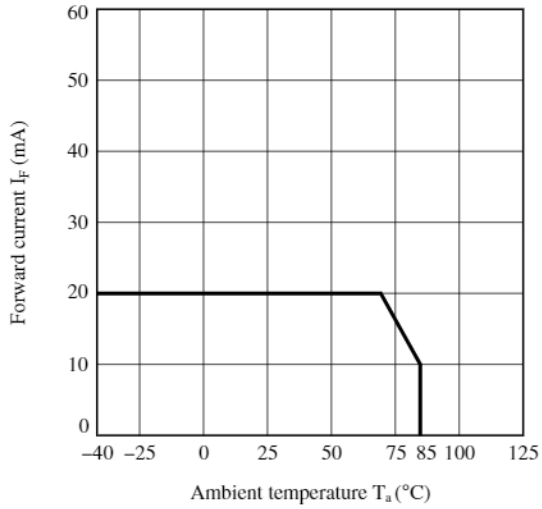


## Fig.11 Power Dissipation vs. Ambient Temperature

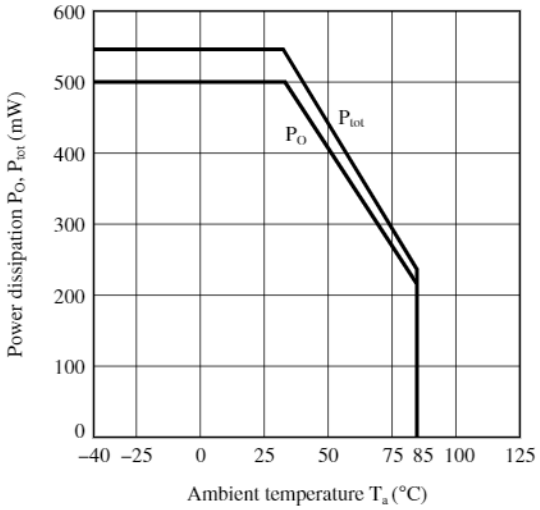


## Fig.12 Forward Current vs. Forward Voltage

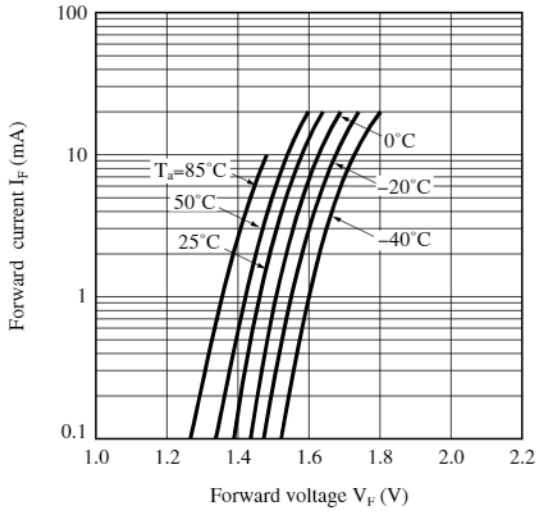


## Fig.13 "Low→High" Relative Input Threshold Current vs. Supply Voltage

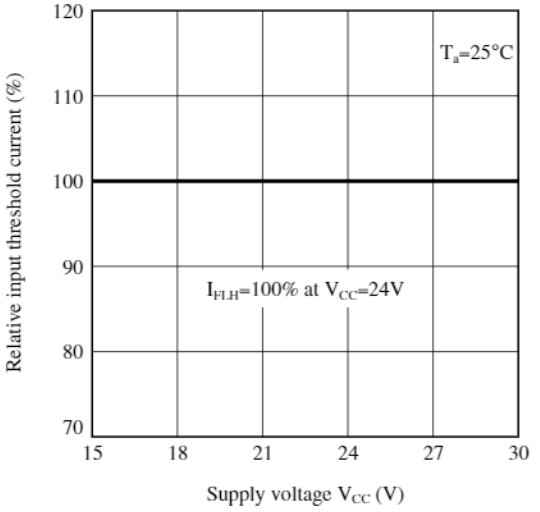


## Fig.14 "Low→High" Relative Input Threshold Current vs. Ambient Temperature

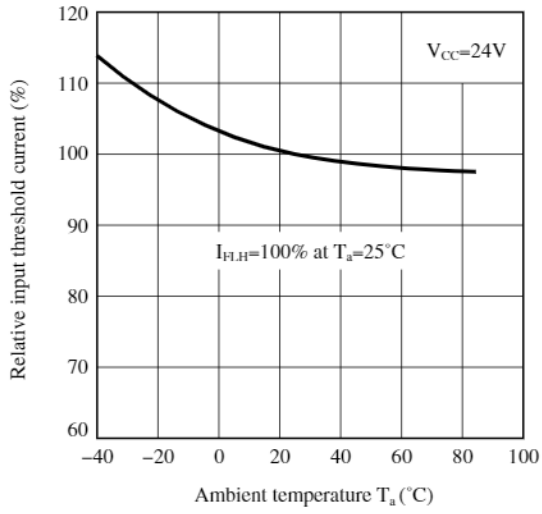


## Fig.15 $O_1$ Low Level Output Voltage vs. $O_1$ Output Current

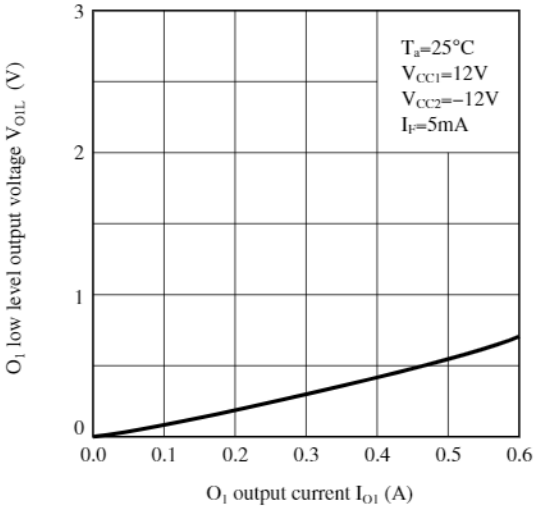

## Fig.16 $O_1$ Low Level Output Voltage vs. Ambient Temperature

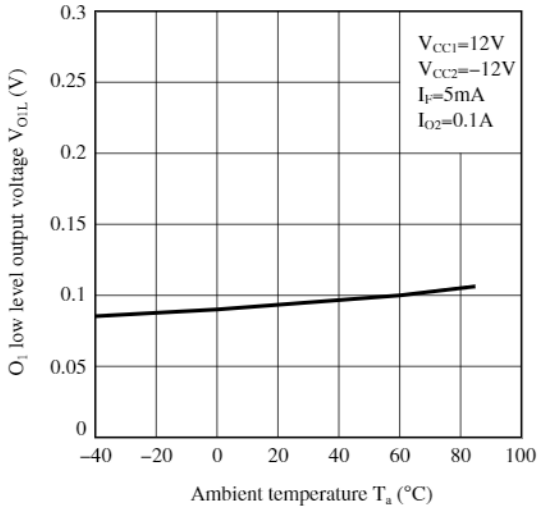


## Fig.17 $O_2$ Output Voltage Drop vs. $O_2$ Output Current

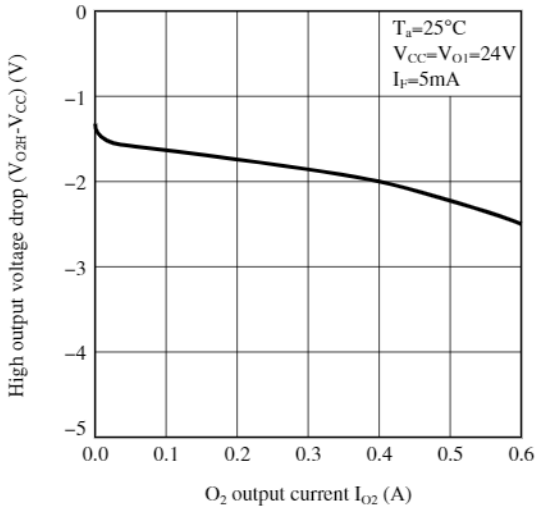


## Fig.18 $O_2$ High Level Output Voltage vs. Supply Voltage

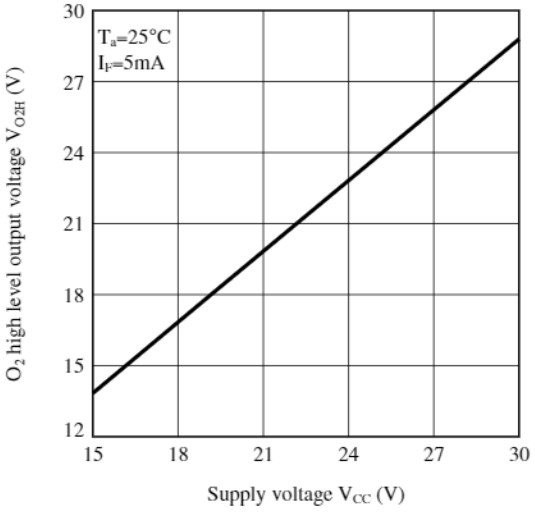


## Fig.19 $O_2$ High Level Output Voltage vs. Ambient Temperature

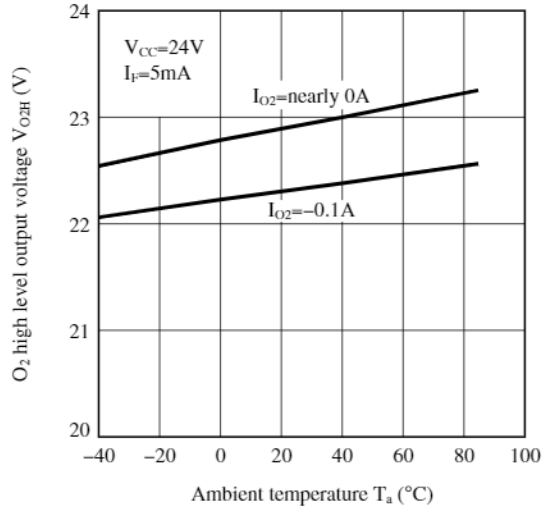


## Fig.20 $O_2$ Low Level Output Voltage vs. $O_2$ Output Current

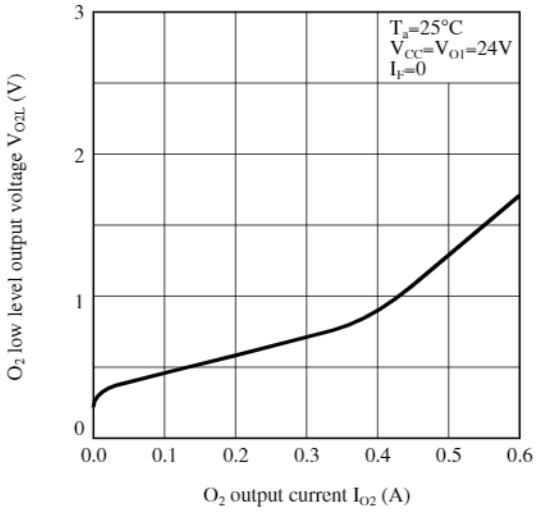


## Fig.21 $O_2$ Low Level Output Voltage vs. Ambient Temperature

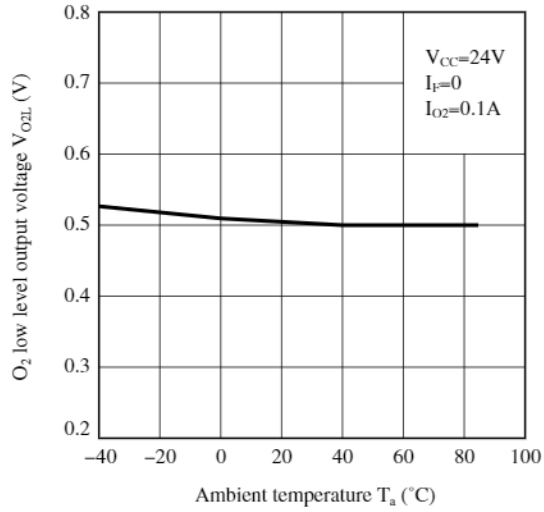

## Fig.22 High Level Supply Current vs. Supply Voltage

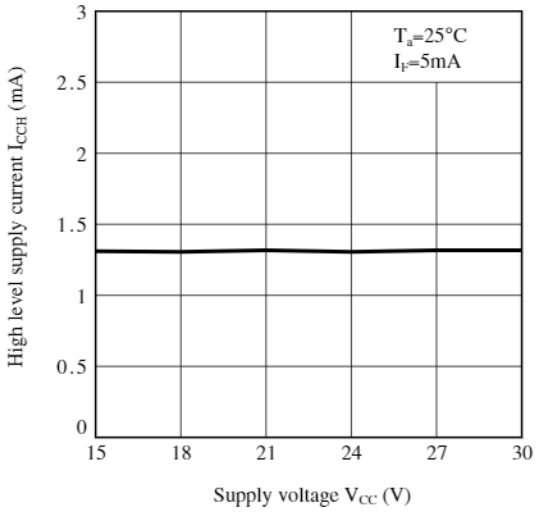


## Fig.23 Low Level Supply Current vs. Supply Voltage

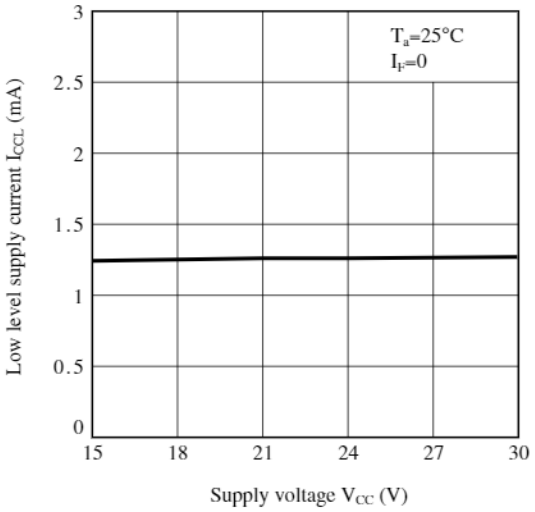


## Fig.24 High Level Supply Current vs. Ambient Temperature

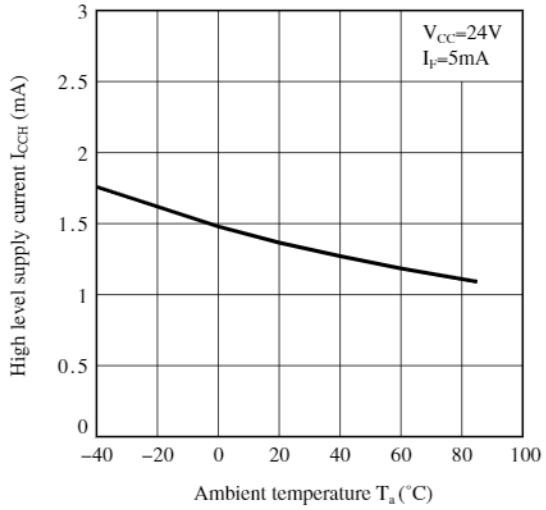


## Fig.25 Low Level Supply Current vs. Ambient Temperature

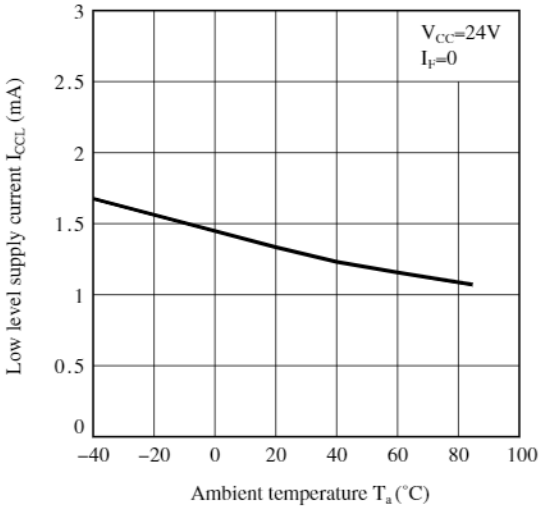


## Fig.26 Propagation Delay Time vs. Forward Current

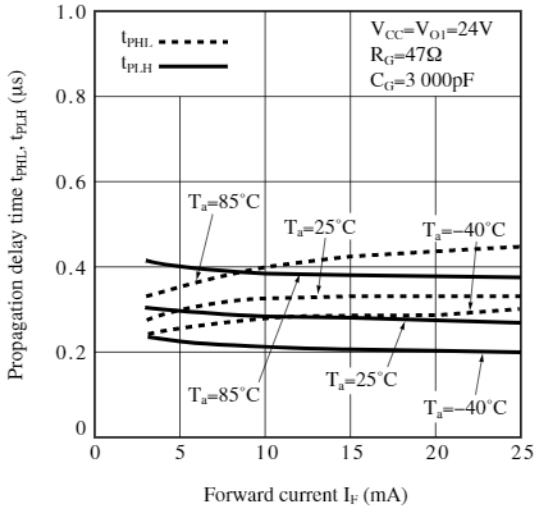


## Fig.27 Propagation Delay Time vs. Ambient Temperature

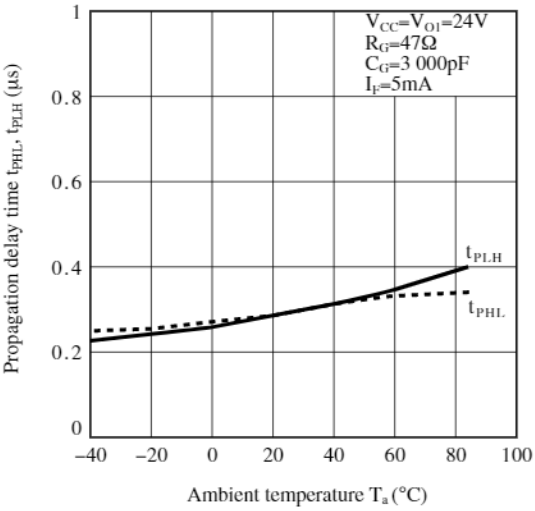


Remarks : Please be aware that all data in the graph are just for reference and not for guarantee.

## ■ Design Considerations

### ● Recommended operating conditions

| Parameter | Symbol | MIN. | TYP. | MAX. | Unit |
|---|---|---|---|---|---|
| Forward current | $I_F$ | 10 | – | 20 | mA |
| Supply voltage | $V_{CC}$ | 15 | – | 30 | V |
| Operating temperature | $T_{opr}$ | –40 | – | 70 | °C |

### ● Notes about static electricity

Transistor of detector side in bipolar configuration may be damaged by static electricity due to its minute design.
When handling these devices, general countermeasure against static electricity should be taken to avoid breakdown of devices or degradation of characteristics.

### ● Design guide

In order to stabilize power supply line, we should certainly recommend to connect a by-pass capacitor of 0.01μF or more between $V_{CC}$ and GND near the device.

In case that some sudden big noise caused by voltage variation is provided between primary and secondary terminals of photocoupler some current caused by it is floating capacitance may be generated and result in false operation since current may go through LED or current may change.
If the photocoupler may be used under the circumstances where noise will be generated we recommend to use the bypass capacitors at the both ends of LED.

The detector which is used in this device, has parasitic diode between each pins and GND.
There are cases that miss operation or destruction possibly may be occurred if electric potential of any pin becomes below GND level even for instant.
Therefore it shall be recommended to design the circuit that electric potential of any pin does not become below GND level.

This product is not designed against irradiation and incorporates non-coherent LED.

This photocoupler is dedicated to the use for IGBT or MOSFET Gate Drive.
Please do not use this for the other application.
As mentioned below, when the input is on, if DC load (resistor etc.) is connected between $O_2$ output pin 6 and GND pin 7 and if the electric potential $V_{O2}$ goes approx. 2V below than electric potential $V_{CC}$ pin 8 continuously, supply current $I_{CC}$ may flow more than usually and go beyond power dissipation.

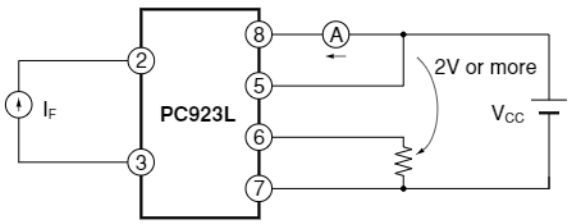

## ● Degradation

In general, the emission of the LED used in photocouplers will degrade over time.
In the case of long term operation, please take the general LED degradation (50% degradation over 5years) into the design consideration.
Please decide the input current which become 2times of MAX. $I_{FLH}$.

## ● Recommended Foot Print (reference)

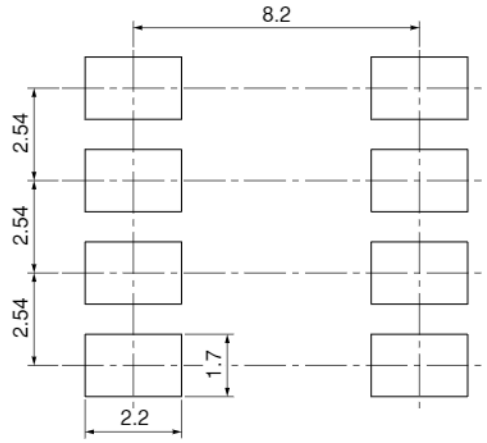


(Unit : mm)

☆ For additional design assistance, please review our corresponding Optoelectronic Application Notes.

## ■ Manufacturing Guidelines

### ● Soldering Method

#### Reflow Soldering:

Reflow soldering should follow the temperature profile shown below.
Soldering should not exceed the curve of temperature profile and time.
Please don't solder more than twice.

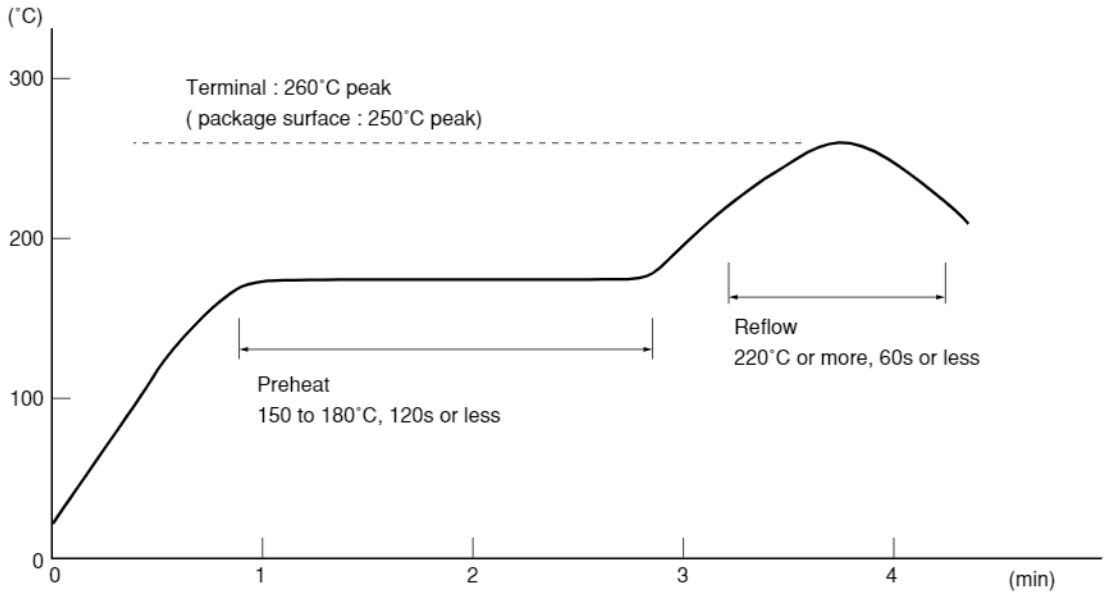


#### Flow Soldering :

Due to SHARP's double transfer mold construction submersion in flow solder bath is allowed under the below listed guidelines.

Flow soldering should be completed below 270˚C and within 10s.
Preheating is within the bounds of 100 to 150˚C and 30 to 80s.
Please don't solder more than twice.

#### Hand soldering

Hand soldering should be completed within 3s when the point of solder iron is below 400˚C.
Please don't solder more than twice.

#### Other notices

Please test the soldering method in actual condition and make sure the soldering works fine, since the impact on the junction between the device and PCB varies depending on the tooling and soldering conditions.

## ● Cleaning instructions

### Solvent cleaning:

Solvent temperature should be 45˚C or below Immersion time should be 3minutes or less

### Ultrasonic cleaning:

The impact on the device varies depending on the size of the cleaning bath, ultrasonic output, cleaning time, size of PCB and mounting method of the device.
Therefore, please make sure the device withstands the ultrasonic cleaning in actual conditions in advance of mass production.

### Recommended solvent materials:

Ethyl alcohol, Methyl alcohol and Isopropyl alcohol
In case the other type of solvent materials are intended to be used, please make sure they work fine in actual using conditions since some materials may erode the packaging resin.

## ● Presence of ODC

This product shall not contain the following materials.
And they are not used in the production process for this device.
Regulation substances : CFCs, Halon, Carbon tetrachloride, 1.1.1-Trichloroethane (Methylchloroform)
Specific brominated flame retardants such as the PBBOs and PBBs are not used in this product at all.

## ■ Package specification

### ● Sleeve package

#### Package materials

Sleeve : HIPS (with anti-static material)

Stopper : Styrene-Elastomer

#### Package method

MAX. 50 pcs. of products shall be packaged in a sleeve.

Both ends shall be closed by tabbed and tabless stoppers.

The product shall be arranged in the sleeve with its primary side mark on the tabless stopper side.

MAX. 20 sleeves in one case.

#### Sleeve outline dimensions

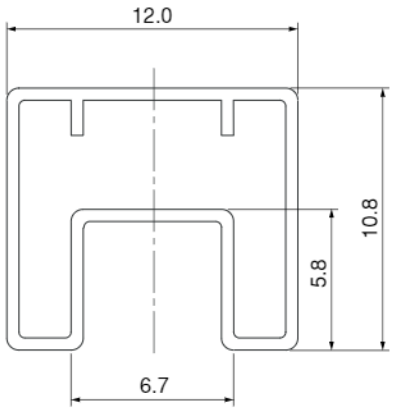


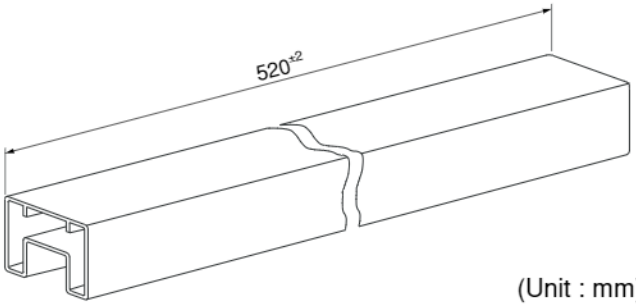


(Unit : mm)

## ● Tape and Reel package

### Package materials

Carrier tape : A-PET (with anti-static material)

Cover tape : PET (three layer system)

Reel : PS

### Carrier tape structure and Dimensions

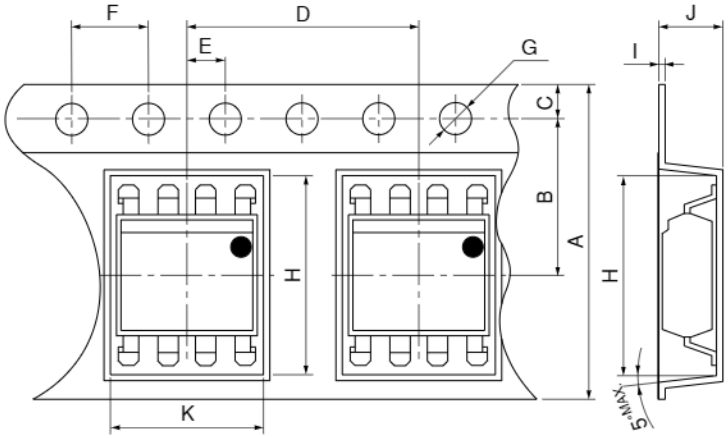


Dimensions List (Unit : mm)

| A | B | C | D | E | F | G |
|---|---|---|---|---|---|---|
| $16.0^{\pm0.3}$ | $7.5^{\pm0.1}$ | $1.75^{\pm0.1}$ | $12.0^{\pm0.1}$ | $2.0^{\pm0.1}$ | $4.0^{\pm0.1}$ | $\phi1.5^{+0.1}_{-0}$ |
| H | I | J | K | | | |
| $10.4^{\pm0.1}$ | $0.4^{\pm0.05}$ | $4.2^{\pm0.1}$ | $10.2^{\pm0.1}$ | | | |

### Reel structure and Dimensions

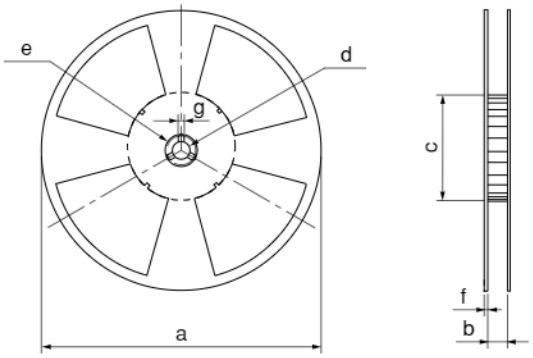


Dimensions List (Unit : mm)

| a | b | c | d |
|---|---|---|---|
| 330 | $17.5^{\pm1.5}$ | $100^{\pm1.0}$ | $13^{\pm0.5}$ |
| e | f | g | |
| $23^{\pm1.0}$ | $2.0^{\pm0.5}$ | $2.0^{\pm0.5}$ | |

### Direction of product insertion

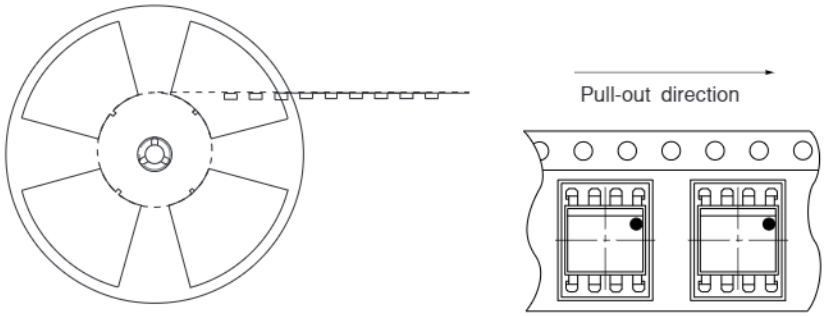


[Packing : 1 000pcs/reel]

## ■ Important Notices

· The circuit application examples in this publication are provided to explain representative applications of SHARP devices and are not intended to guarantee any circuit design or license any intellectual property rights. SHARP takes no responsibility for any problems related to any intellectual property right of a third party resulting from the use of SHARP's devices.

· Contact SHARP in order to obtain the latest device specification sheets before using any SHARP device. SHARP reserves the right to make changes in the specifications, characteristics, data, materials, structure, and other contents described herein at any time without notice in order to improve design or reliability. Manufacturing locations are also subject to change without notice.

· Observe the following points when using any devices in this publication. SHARP takes no responsibility for damage caused by improper use of the devices which does not meet the conditions and absolute maximum ratings to be used specified in the relevant specification sheet nor meet the following conditions:

(i) The devices in this publication are designed for use in general electronic equipment designs such as:

--- Personal computers
--- Office automation equipment
--- Telecommunication equipment [terminal]
--- Test and measurement equipment
--- Industrial control
--- Audio visual equipment
--- Consumer electronics

(ii) Measures such as fail-safe function and redundant design should be taken to ensure reliability and safety when SHARP devices are used for or in connection with equipment that requires higher reliability such as:

--- Transportation control and safety equipment (i.e., aircraft, trains, automobiles, etc.)
--- Traffic signals
--- Gas leakage sensor breakers
--- Alarm equipment
--- Various safety devices, etc.

(iii) SHARP devices shall not be used for or in connection with equipment that requires an extremely high level of reliability and safety such as:

--- Space applications
--- Telecommunication equipment [trunk lines]
--- Nuclear power control equipment
--- Medical and other life support equipment (e.g., scuba).

· If the SHARP devices listed in this publication fall within the scope of strategic products described in the Foreign Exchange and Foreign Trade Law of Japan, it is necessary to obtain approval to export such SHARP devices.

· This publication is the proprietary product of SHARP and is copyrighted, with all rights reserved. Under the copyright laws, no part of this publication may be reproduced or transmitted in any form or by any means, electronic or mechanical, for any purpose, in whole or in part, without the express written permission of SHARP. Express written permission is also required before any use of this publication may be made by a third party.

· Contact and consult with a SHARP representative if there are any questions about the contents of this publication.