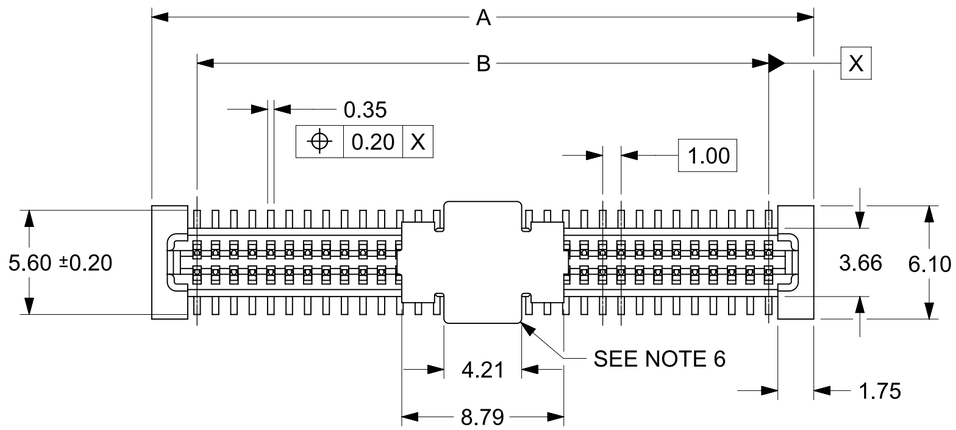

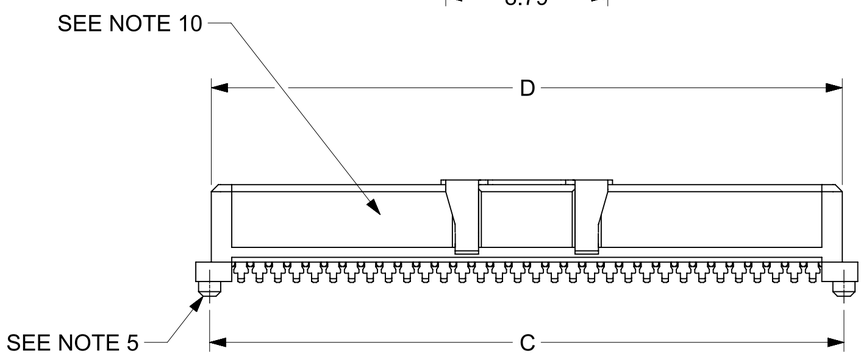

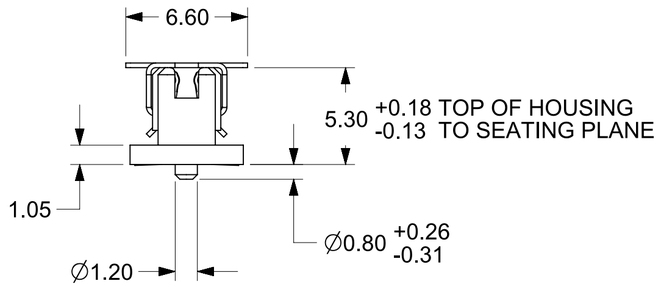

CIRCUIT SIZE	DIM.A	DIM.B	DIM.C	DIM.D
20	13.90	9.00	12.40	12.22
30	18.90	14.00	17.40	17.22
40	23.90	19.00	22.40	22.22
50	28.90	24.00	27.40	27.22
60	33.90	29.00	32.40	32.22
64	35.90	31.00	34.40	34.22
70	38.90	34.00	37.40	37.22
80	43.90	39.00	42.40	42.22
84	45.90	41.00	44.40	44.22
90	48.90	44.00	47.40	47.22
100	53.90	49.00	52.40	52.22
110	58.90	54.00	57.40	57.22
120	63.90	59.00	62.40	62.22

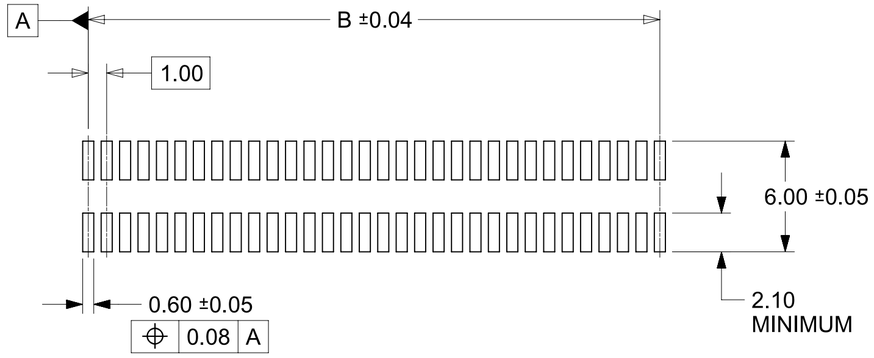

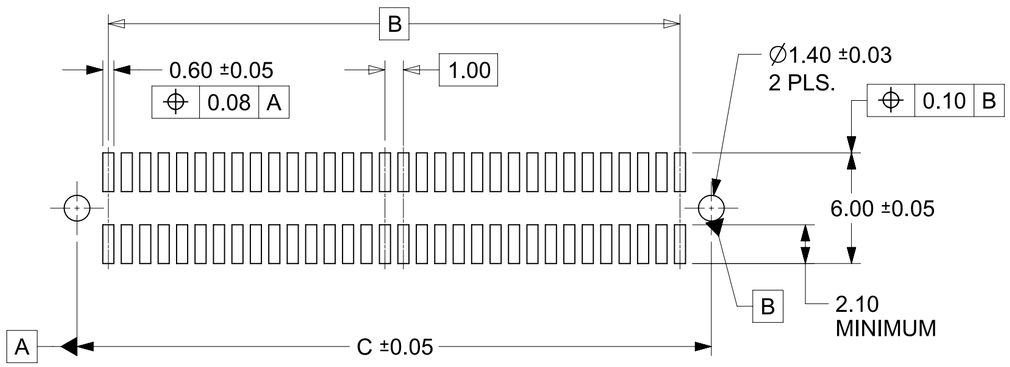

RECOMMENDED PCB LAYOUT
(WITH AND WITHOUT PEGS)
RECOMMENDED PCB THICKNESS: 1.00±0.10

NOTES

1. HOUSING MATERIAL: GLASS FILLED LIQUID CRYSTAL POLYMER(LCP) ; UL 94V-0;
   SEE SHEET 2 FOR COLOR.
   TERMINAL MATERIAL: PHOSPHOR BRONZE; 0.205 THICK
   VACUUM CAP MATERIAL: STAINLESS STEEL; 0.255 THICK.
2. CONTACT PLATING FINISH: REFER TO CHART ON SHEET 2.
3. THIS PART, WHEN MATED WITH MOLEX 1.0mm PLUG CONNECTOR SERIES 71436, CONFORMS TO MOLEX PRODUCT SPECIFICATION PS-71436-9999.
   REFER TO CHART ON SHEET 2 FOR MATED STACK HEIGHTS FOR THIS RECEPTACLE.
4. PACKAGING SPECIFICATIONS: REFER TO CHART ON SHEET 2.
5. PEGS ARE OPTIONAL. REFER TO CHART ON SHEET 2.
6. VACUUM PICK & PLACE CAP IS OPTIONAL. REFER TO CHART ON SHEET 2.
7. THIS PART CONFORMS TO EIA STANDARD 700 AAAB FOR 1.0mm TWO-PART CONNECTORS FOR USE WITH PARALLEL PRINTED BOARDS.
8. COPLANARITY OF SMT TAILS: 0.10mm MAXIMUM.
9. 64-CIRCUIT RECEPTACLE ASSEMBLY WITH PEGS AND VACUUM CAP SHOWN FOR ILLUSTRATION PURPOSES ONLY.
10. ASSEMBLY TO HAVE DATE CODE: XX XX
    WEEK — YEAR

THIS DRAWING CONTAINS INFORMATION THAT IS PROPRIETARY TO MOLEX ELECTRONIC TECHNOLOGIES, LLC AND SHOULD NOT BE USED WITHOUT WRITTEN PERMISSION

DIMENSION UNITS	MM
SCALE	4:1
GENERAL TOLERANCES (UNLESS SPECIFIED)	
ANGULAR TOL	± 0.5°
4 PLACES	±
3 PLACES	±
2 PLACES	± 0.130
1 PLACE	± 0.25
0 PLACES	±
DRAFT WHERE APPLICABLE MUST REMAIN WITHIN DIMENSIONS	

CURRENT REV DESC: REMOVED OBSOLETED PART NUMBERS AS PER PCN#514354

STATUS: Production
DRWN: Madhava M 2024-11-05
CHK'D: Ganesh Rao B 2024-12-18
APPR: Gurunandan GA 2024-12-18

molex

SALES ASSY, 1.0MM BOARD TO BOARD RECEPTACLE CONNECTOR 5.30 HIGH

PRODUCT CUSTOMER DRAWING

DOCUMENT NUMBER	DOC TYPE	DOC PART	REVISION
714390000	PSD	000	A2

THIRD ANGLE PROJECTION	DRAWING	SERIES	MATERIAL NUMBER	CUSTOMER	SHEET NUMBER
	C-SIZE	71439	SEE TABLE	GENERAL MARKET	1 OF 2

FORMAT: TC-B-prod-C
REVISION: B
DATE: 2022/08/01

WHITE (NATURAL) MATERIAL

PART NUMBER	CIRCUIT SIZE	CONTACT PLATING SEE NOTE BELOW CHARTS	PEGS	PICK & PLACE CAP	PACKAGING SPEC. NUMBER	PACKAGING TYPE
71439-0164	64	30 GOLD	YES	NO	PK-70873-013	TUBE
71439-0264	64	50 GOLD	NO	YES	PK-70873-063	TAPE & REEL
71439-0364	64	30 GOLD	YES	YES	PK-70873-014	TUBE
71439-0464	64	30 GOLD	YES	YES	PK-70873-063	TAPE & REEL
71439-0764	64	30 GOLD	NO	YES	PK-70873-017	TUBE
71439-0864	64	30 GOLD	NO	YES	PK-70873-063	TAPE & REEL
71439-0664	64	50 GOLD	YES	NO	PK-70873-013	TUBE
71439-0064	64	50 GOLD	NO	NO	PK-70873-015	TUBE

BLACK MATERIAL

PART NUMBER	CIRCUIT SIZE	CONTACT PLATING SEE NOTE BELOW CHARTS	PEGS	PICK & PLACE CAP	PACKAGING SPEC. NUMBER	PACKAGING TYPE
71439-0964	64	30 GOLD	NO	YES	PK-70873-063	TAPE & REEL

CONTACT PLATING :

30 GOLD - 0.76 MICROMETER MINIMUM GOLD IN CONTACT AREA AND
1.91 MICOMETER MINIMUM MATTE TIN IN SOLDER
TAIL AREA. NICKEL UNDERPLATE OVER ENTIRE TERMINAL.

50 GOLD - 1.27 MICROMETER MINIMUM GOLD IN CONTACT AREA AND
1.91 MICROMETER MINIMUM MATTE TIN IN SOLDER
TAIL AREA. NICKEL UNDERPLATE OVER ENTIRE TERMINAL.

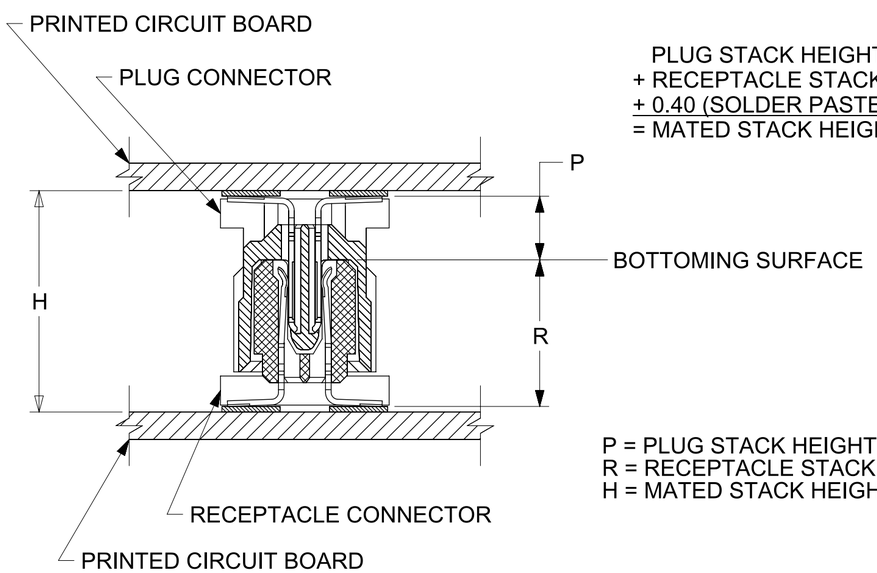

PLUG STACK HEIGHT
+ RECEPTACLE STACK HEIGHT
+ 0.40 (SOLDER PASTE ALLOWANCE)
= MATED STACK HEIGHT

P = PLUG STACK HEIGHT
R = RECEPTACLE STACK HEIGHT
H = MATED STACK HEIGHT

RECOMMENDED PLUG/RECEPTACLE COMBINATION FOR
MATED STACK HEIGHT PER EIA STANDARD 700 AAAB

MATED STACK HEIGHT	RECEPTACLE HEIGHT	RECEPTACLE SERIES NO.	PLUG HEIGHT	PLUG SERIES NO.
8.00	5.30	71439-0***	2.30	71436-0***
9.00	5.30	71439-0***	3.30	71436-1***
10.00	5.30	71439-0***	4.30	71436-2***

THIS DRAWING CONTAINS INFORMATION THAT IS PROPRIETARY TO MOLEX ELECTRONIC TECHNOLOGIES, LLC AND SHOULD NOT BE USED WITHOUT WRITTEN PERMISSION

DIMENSION UNITS	SCALE
MM	NTS

GENERAL TOLERANCES (UNLESS SPECIFIED)

ANGULAR TOL	± 0.5°
4 PLACES	±
3 PLACES	±
2 PLACES	± 0.130
1 PLACE	± 0.25
0 PLACES	±

DRAFT WHERE APPLICABLE MUST REMAIN WITHIN DIMENSIONS

CURRENT REV DESC: REMOVED OBSOLETED PART NUMBERS AS PER PCN#514354

STATUS: Production
DRWN: Madhava M 2024-11-05
CHK'D: Ganesh Rao B 2024-12-18
APPR: Gurunandan GA 2024-12-18

THIRD ANGLE PROJECTION

DRAWING	SERIES
C-SIZE	71439

molex

SALES ASSY, 1.0MM BOARD TO BOARD
RECEPTACLE CONNECTOR 5.30 HIGH

PRODUCT CUSTOMER DRAWING

DOCUMENT NUMBER	DOC TYPE	DOC PART	REVISION
714390000	PSD	000	A2

MATERIAL NUMBER	CUSTOMER	SHEET NUMBER
SEE TABLE	GENERAL MARKET	2 OF 2

FORMAT: TC-dc-prod-C
REVISION: B
DATE: 2022/08/01