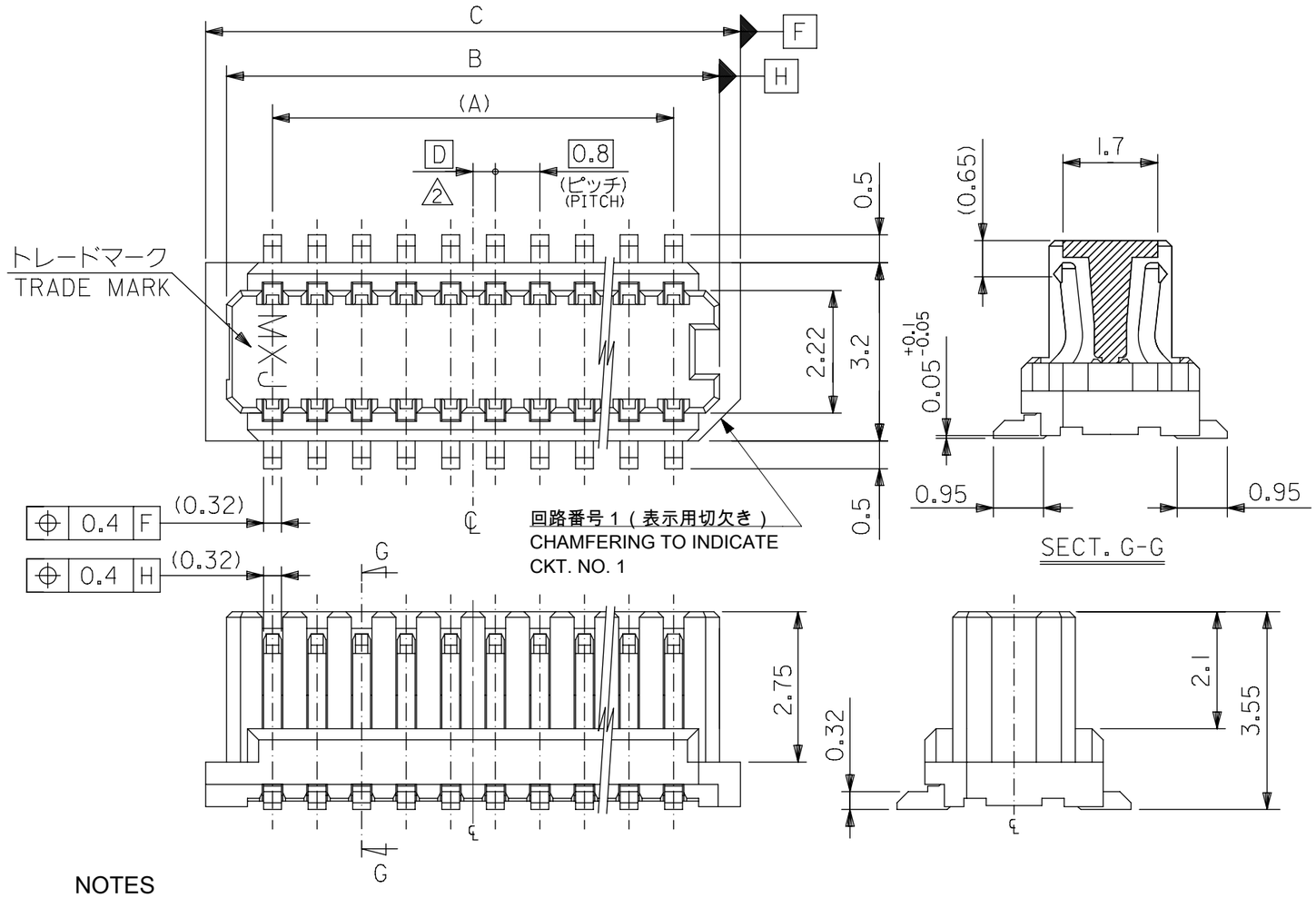

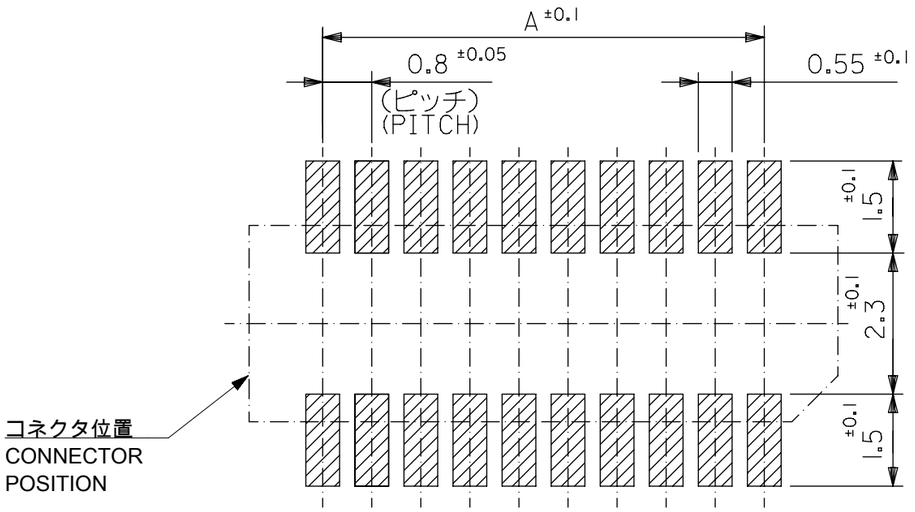

参考基板レイアウト（マウント面）
P.C.B. PATTERN LAYOUT(REF.) (MOUNT AREA)

NOTES

1. 嵌合相手：53307, 53309シリーズ
   MATE WITH : 53307, 53309 SERIES
2. ハウジングの ℄から隣接するターミナルの ℄迄の位置を示す。
   SHOW POSITION FROM ℄OF HOUSING TO ℄ OF ADJACENT TERMINALS.
3. 一対の基板の嵌合に於いて、本製品を２個以上使用することは推奨できません。
   MXJ DOES NOT RECOMMEND THE USAGE OF TWO OR MORE OF THESE CONNECTORS BETWEEN A SINGLE PAIR OF P.C.BOARD.
4. 本製品は 52465-**27の鉛フリー品である。
   THIS PRODUCT IS LEAD FREE OF 52465-**27.
5. ELV及びRoHS適合品
   ELV AND RoHS COMPLIANT.
6. 使用材料MATERIAL
   ハウジングHOUSING : POLYAMIDE GLASS FILLED, UL94V-0 (WHITE)
   ターミナルTERMINAL : 燐青銅 PHOSPHOR BRONZE t=0.32
7. めっき仕様 PLATING
   ターミナルTERMINAL : 錫めっき/ニッケル下地 TIN OVER NICKEL PLATED
8. テール平坦度は0.1mm MAX
   TAIL COPLANALITY TO BE 0.1mm MAXIMUM.

0.4	17.6	16.85	15.2	52465-4071	40
0.4	16.0	15.25	13.6	52465-3671	36
0.4	14.4	13.65	12.0	52465-3271	32
0.8	13.6	12.85	11.2	52465-3071	30
0.4	12.8	12.05	10.4	52465-2871	28
0.8	12.0	11.25	9.6	52465-2671	26
0.4	11.2	10.45	8.8	52465-2471	24
0.8	10.4	9.65	8.0	52465-2271	22
0.4	9.6	8.85	7.2	52465-2071	20
0.8	8.8	8.05	6.4	52465-1871	18
0.4	8.0	7.25	5.6	52465-1671	16
0.8	7.2	6.45	4.8	52465-1471	14
0.4	6.4	5.65	4.0	52465-1271	12
0.8	5.6	4.85	3.2	52465-1071	10
D	C	B	A	EMBOSSED TAPE PACKAGE ORDER NO	CKT

THIS DRAWING CONTAINS INFORMATION THAT IS PROPRIETARY TO MOLEX ELECTRONIC TECHNOLOGIES, LLC AND SHOULD NOT BE USED WITHOUT WRITTEN PERMISSION

GENERAL TOLERANCES (UNLESS SPECIFIED)	
10 UNDER	±0.2
10 OVER 30 UNDER	±0.25
30 OVER	±0.3
ANGULAR	±3°

DRAFT WHERE APPLICABLE MUST REMAIN WITHIN DIMENSIONS

DIMENSION UNITS	SCALE
mm	10:1

GENERAL TOLERANCES (UNLESS SPECIFIED)		
ANGULAR TOL	±	3.0 °
4 PLACES	±	0.2
3 PLACES	±	0.25
2 PLACES	±	0.3
1 PLACE	±	
0 PLACES	±	

DRAFT WHERE APPLICABLE MUST REMAIN WITHIN DIMENSIONS

CURRENT REV DESC:

EC NO: 750938
DRWN: RAJAGN 2023/05/19
CHK'D: HSHIMOYAMA 2023/05/25
APPR: YNAITO 2023/05/25

INITIAL REVISION:
DRWN: YSAKIYAMA 2004/02/23
APPR: MSASAO 2004/02/24

THIRD ANGLE PROJECTION | DRAWING: A3-SIZE | SERIES: 52465

molex

0.8 MM PITCH B-TO-B CONN.
RECEPTACLE (WITHOUT BOSS)

PRODUCT CUSTOMER DRAWING

DOCUMENT NUMBER	DOC TYPE	DOC PART	REVISION
SD-52465-028	PSD	001	C

MATERIAL NUMBER	CUSTOMER	SHEET NUMBER
	GENERAL MARKET	1 OF 2

DOCUMENT STATUS	P1	RELEASE DATE	2023/05/25 11:10:17

FORMAT: master-tb-prod-A3
REVISION: J
DATE: 2020/01/14

嵌合相手 MATE WITH
53309-**70 (BOSS無し WITHOUT BOSS)
53309-**71 (BOSSあり WITH BOSS)

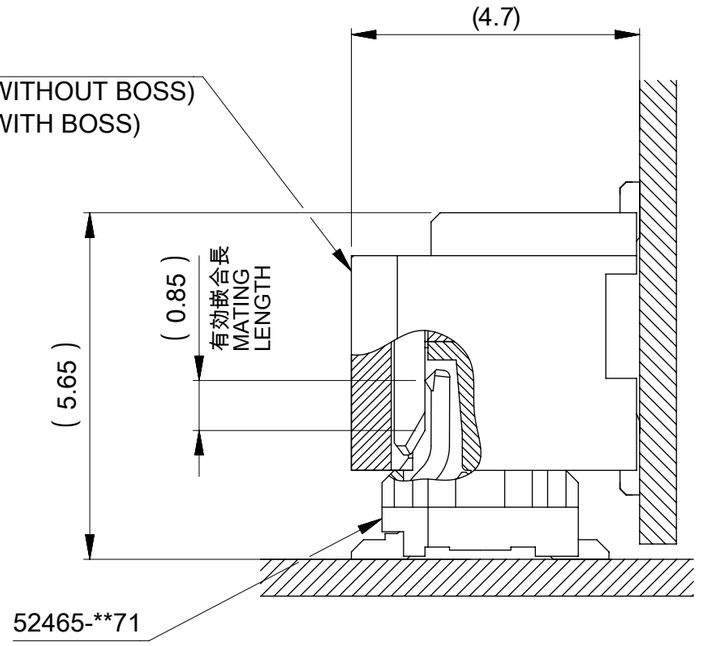

嵌合状態図（参考）
MATED DRAWING(REF.)

嵌合相手 MATE WITH
53307-**71
(BOSS無し WITHOUT BOSS)

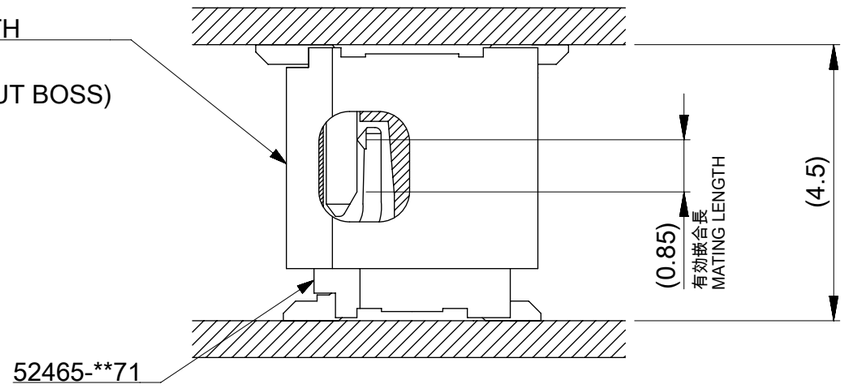

嵌合状態図（参考）
MATED DRAWING(REF.)

GENERAL TOLERANCES (UNLESS SPECIFIED)	
10^{UNDER}	±0.2
$10^{OVER}30^{UNDER}$	±0.25
30^{OVER}	±0.3
ANGULAR	±3°

DRAFT WHERE APPLICABLE MUST REMAIN WITHIN DIMENSIONS

GENERAL TOLERANCES (UNLESS SPECIFIED)	
ANGULAR TOL	± 3.0 °
4 PLACES	± 0.2
3 PLACES	± 0.25
2 PLACES	± 0.3
1 PLACE	±
0 PLACES	±

DRAFT WHERE APPLICABLE MUST REMAIN WITHIN DIMENSIONS

THIS DRAWING CONTAINS INFORMATION THAT IS PROPRIETARY TO MOLEX ELECTRONIC TECHNOLOGIES, LLC AND SHOULD NOT BE USED WITHOUT WRITTEN PERMISSION

DIMENSION UNITS: mm
SCALE: 1:1

CURRENT REV DESC:

EC NO: 750938
DRWN: RAJAGN 2023/05/19
CHK'D: HSHIMOYAMA 2023/05/25
APPR: YNAITO 2023/05/25

INITIAL REVISION:
DRWN: YSAKIYAMA 2004/02/23
APPR: MSASAO 2004/02/24

THIRD ANGLE PROJECTION | DRAWING: A3-SIZE | SERIES: 52465

molex

0.8 MM PITCH B-TO-B CONN.
RECEPTACLE (WITHOUT BOSS)

PRODUCT CUSTOMER DRAWING

DOCUMENT NUMBER	DOC TYPE	DOC PART	REVISION
SD-52465-028	PSD	001	C

MATERIAL NUMBER	CUSTOMER	SHEET NUMBER
	GENERAL MARKET	2 OF 2

DOCUMENT STATUS	P1	RELEASE DATE	2023/05/25 11:10:17

FORMAT: master-tb-prod-A3
REVISION: J
DATE: 2020/01/14

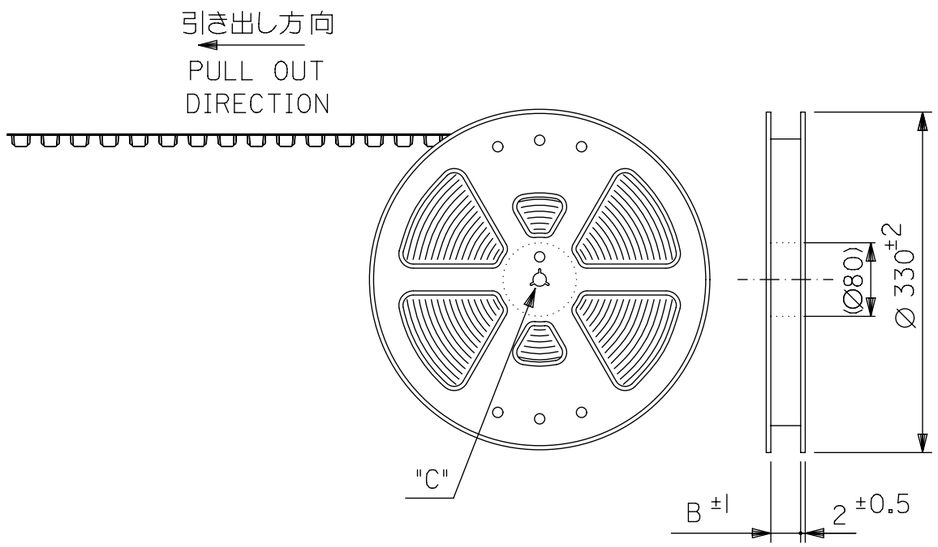

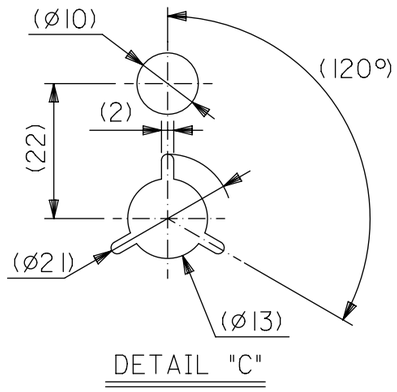

DETAIL "C"

NOTES

1. 梱包数量：1000個/リール　NUMBER OF CONNECTORS : 1000PCS/REEL

2. リードテープ長さ　LEAD TAPE LENGTH

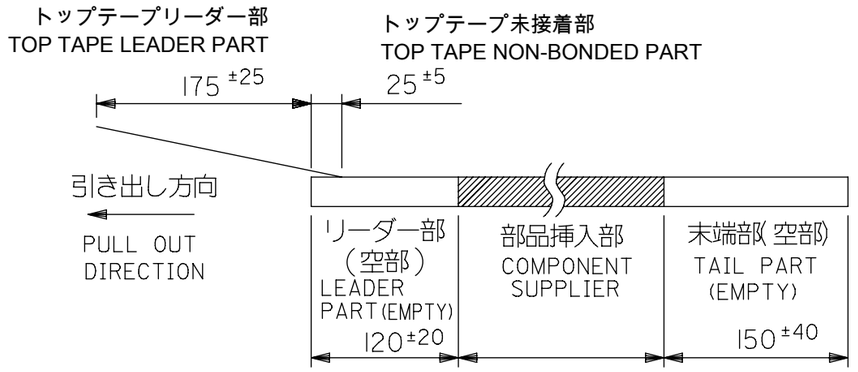

3. トップテープの剥離強度についてはIEC60286-3に準拠。
   TOP TAPE PEEL FORCE IS DEFINED BY IEC60286-3.

4. 材料　キャリアテープ：ポリプロピレン (PP)
   トップテープ：PET, PE, PEF
   リール：ポリスチレン (PS) <リサイクル材を含む>
   MATERIAL
   CARRIER TAPE : POLYPROPYLENE
   TOP TAPE : PET, PE, PEF
   REEL : POLYSTYRENE (PS) < CONTAINED RECYCLE MATERIAL >

5. 本製品は52465-**91の鉛フリー品である。
   THIS PRODUCT IS LEAD FREE OF 52465-**91.

GENERAL TOLERANCES (UNLESS SPECIFIED)	
10^{UNDER}	±0.2
$10^{OVER}30^{UNDER}$	±0.25
30^{OVER}	±0.3
ANGULAR	±3°
DRAFT WHERE APPLICABLE MUST REMAIN WITHIN DIMENSIONS	

THIS DRAWING CONTAINS INFORMATION THAT IS PROPRIETARY TO MOLEX ELECTRONIC TECHNOLOGIES, LLC AND SHOULD NOT BE USED WITHOUT WRITTEN PERMISSION

DIMENSION UNITS	SCALE
mm	NTS

GENERAL TOLERANCES (UNLESS SPECIFIED)	
ANGULAR TOL	± °
4 PLACES	±
3 PLACES	±
2 PLACES	±
1 PLACE	±
0 PLACES	±
DRAFT WHERE APPLICABLE MUST REMAIN WITHIN DIMENSIONS	

CURRENT REV DESC:

EC NO: 653700
DRWN: AHMADI2 2021/02/02
CHK'D: HSHIMOYAMA 2021/02/26
APPR: SHOSHIKAWA 2021/02/26

INITIAL REVISION:
DRWN: YSAKIYAMA 2004/02/23
APPR: MSASAO 2004/02/24

THIRD ANGLE PROJECTION | DRAWING: A3-SIZE | SERIES: 52465

molex

0.8 MM PITCH B-TO-B CONN.
RECEPTACLE (WITHOUT BOSS) EMBOSS TAPE PACKAGE

PRODUCT CUSTOMER DRAWING

DOCUMENT NUMBER	DOC TYPE	DOC PART	REVISION
SD-52465-029	PSD	001	A

MATERIAL NUMBER	CUSTOMER	SHEET NUMBER
	GENERAL MARKET	1 OF 3

DOCUMENT STATUS	P1	RELEASE DATE	2021/02/26 10:23:45

FORMAT: master-lb-prod-A3
REVISION: J
DATE: 2020/01/14

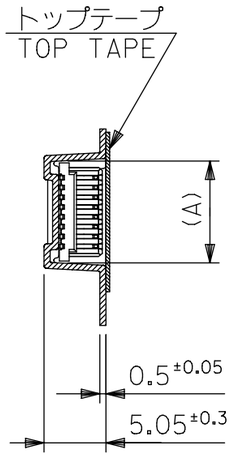

SECT. Z-Z

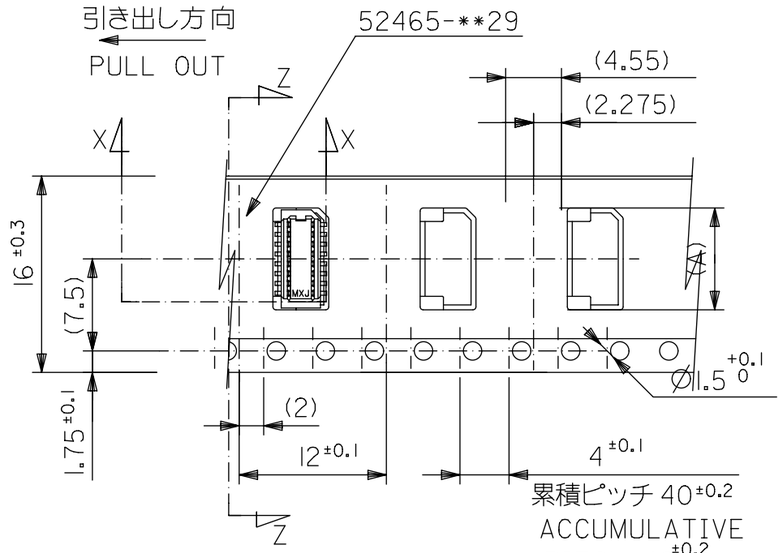

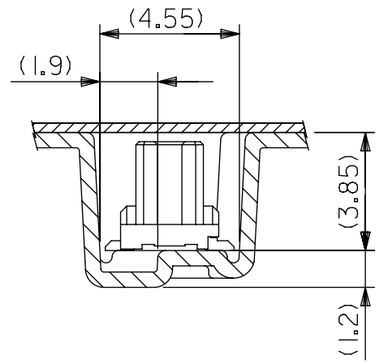

SECT. X-X
(SCALE: 5-1)

16mm幅キャリアテープ
16mm WIDTH CARRIER TAPE

16	17.5	9.1	52465-1871	18
		8.3	52465-1671	16
		7.5	52465-1471	14
		6.7	52465-1271	12
		5.9	52465-1071	10
キャリアテープ幅 CARRIER TAPE WIDTH	B	(A)	EMBOSSED TAPE PACKAGE ORDER NO	極数 CIRCUITS

THIS DRAWING CONTAINS INFORMATION THAT IS PROPRIETARY TO MOLEX ELECTRONIC TECHNOLOGIES, LLC AND SHOULD NOT BE USED WITHOUT WRITTEN PERMISSION

GENERAL TOLERANCES (UNLESS SPECIFIED)	
10^{UNDER}	±0.2
$10^{OVER}30^{UNDER}$	±0.25
30^{OVER}	±0.3
ANGULAR	±3°

DRAFT WHERE APPLICABLE MUST REMAIN WITHIN DIMENSIONS

DIMENSION UNITS	SCALE
mm	NTS

GENERAL TOLERANCES (UNLESS SPECIFIED)	
ANGULAR TOL	± °
4 PLACES	±
3 PLACES	±
2 PLACES	±
1 PLACE	±
0 PLACES	±

DRAFT WHERE APPLICABLE MUST REMAIN WITHIN DIMENSIONS

CURRENT REV DESC:

EC NO: 653700
DRWN: AHMADI2 2021/02/02
CHK'D: HSHIMOYAMA 2021/02/26
APPR: SHOSHIKAWA 2021/02/26

INITIAL REVISION:
DRWN: YSAKIYAMA 2004/02/23
APPR: MSASAO 2004/02/24

THIRD ANGLE PROJECTION | DRAWING: A3-SIZE | SERIES: 52465

molex

0.8 MM PITCH B-TO-B CONN.
RECEPTACLE (WITHOUT BOSS) EMBOSS TAPE PACKAGE

PRODUCT CUSTOMER DRAWING

DOCUMENT NUMBER	DOC TYPE	DOC PART	REVISION
SD-52465-029	PSD	001	A

MATERIAL NUMBER	CUSTOMER	SHEET NUMBER
	GENERAL MARKET	2 OF 3

DOCUMENT STATUS	P1	RELEASE DATE	2021/02/26 10:23:45

FORMAT: master-lb-prod-A3
REVISION: J
DATE: 2020/01/14

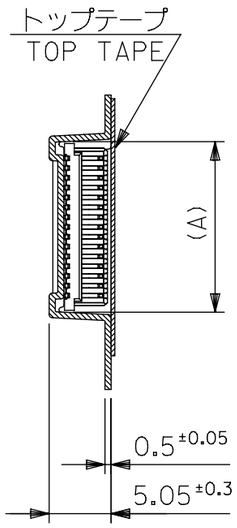

SECT. Y-Y

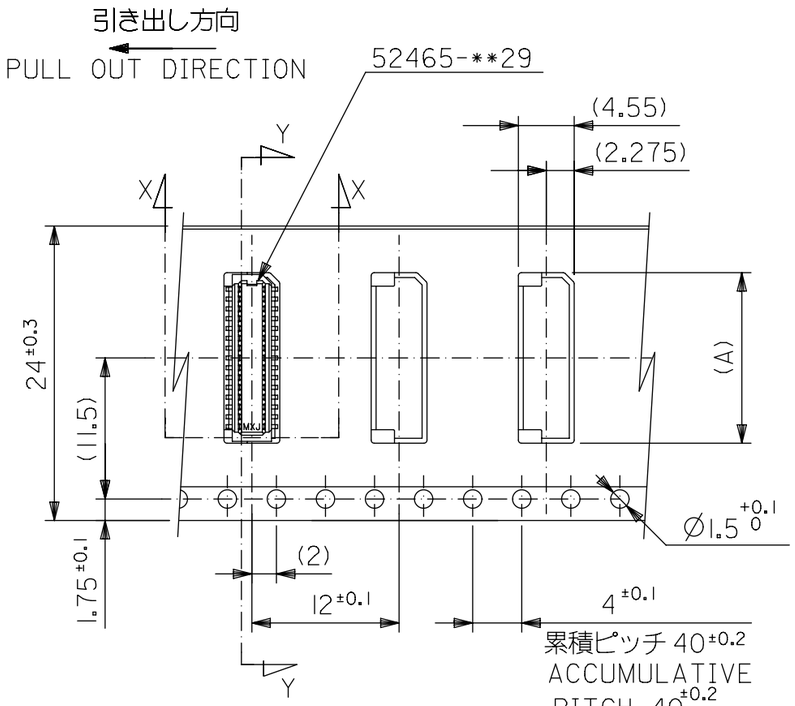

24mm幅キャリアテープ

24mm WIDTH CARRIER TAPE

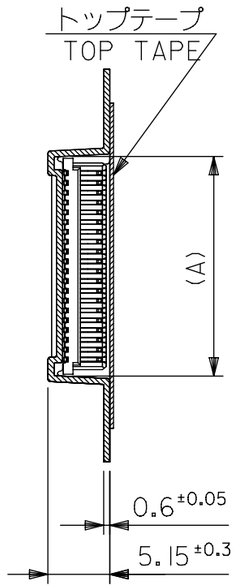

SECT. Z-Z

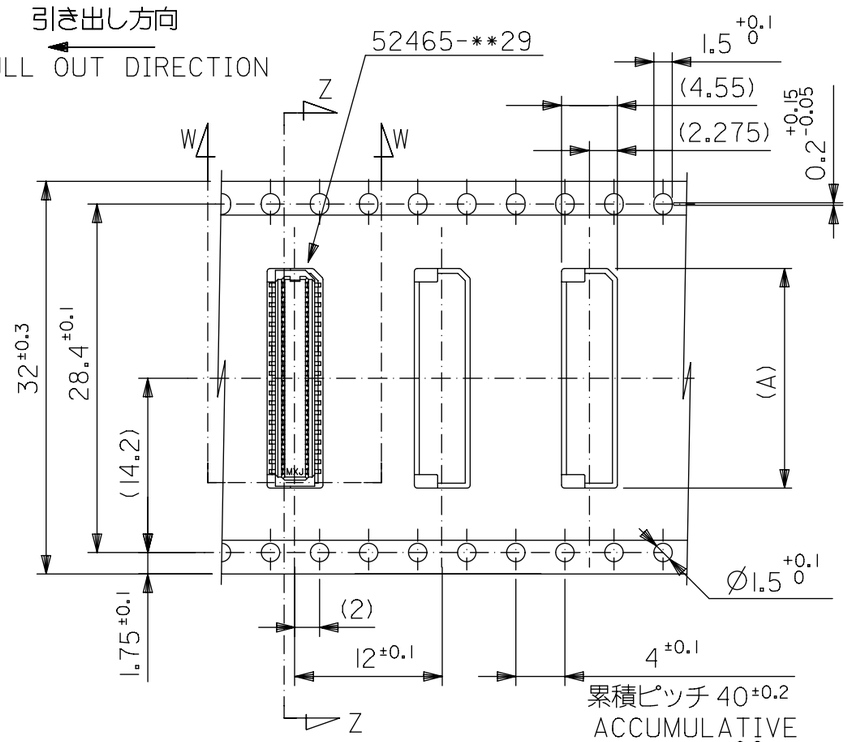

32mm幅キャリアテープ

32mm WIDTH CARRIER TAPE

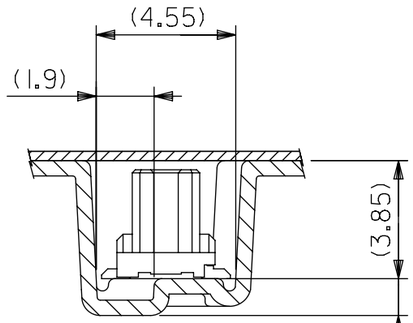

SECT. X-X

(SCALE; 5:1)

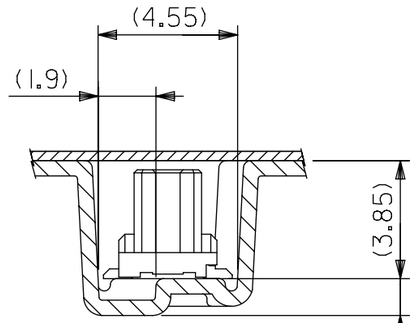

SECT. W-W

(SCALE; 5:1)

32	33.5	17.9	52465-4071	40
24	25.5	16.3	52465-3671	36
		14.7	52465-3271	32
		13.9	52465-3071	30
		13.1	52465-2871	28
		12.3	52465-2671	26
		11.5	52465-2471	24
		10.7	52465-2271	22
		9.9	52465-2071	20
キャリアテープ幅 CARRIER TAPE WIDTH	B	(A)	EMBOSSED TAPE PACKAGE / ORDER NO	極数 CIRCUITS

THIS DRAWING CONTAINS INFORMATION THAT IS PROPRIETARY TO MOLEX ELECTRONIC TECHNOLOGIES, LLC AND SHOULD NOT BE USED WITHOUT WRITTEN PERMISSION

GENERAL TOLERANCES (UNLESS SPECIFIED)	
10 UNDER	±0.2
10 OVER 30 UNDER	±0.25
30 OVER	±0.3
ANGULAR±3°	
DRAFT WHERE APPLICABLE MUST REMAIN WITHIN DIMENSIONS	

GENERAL TOLERANCES (UNLESS SPECIFIED)	
ANGULAR TOL	± °
4 PLACES	±
3 PLACES	±
2 PLACES	±
1 PLACE	±
0 PLACES	±
DRAFT WHERE APPLICABLE MUST REMAIN WITHIN DIMENSIONS	

DIMENSION UNITS	SCALE
mm	NTS

CURRENT REV DESC:

EC NO: 653700
DRWN: AHMADI2 2021/02/02
CHK'D: HSHIMOYAMA 2021/02/26
APPR: SHOSHIKAWA 2021/02/26

INITIAL REVISION:
DRWN: YSAKIYAMA 2004/02/23
APPR: MSASAO 2004/02/24

THIRD ANGLE PROJECTION | DRAWING: A3-SIZE | SERIES: 52465

molex

0.8 MM PITCH B-TO-B CONN.
RECEPTACLE (WITHOUT BOSS) EMBOSS TAPE PACKAGE

PRODUCT CUSTOMER DRAWING

DOCUMENT NUMBER	DOC TYPE	DOC PART	REVISION
SD-52465-029	PSD	001	A

MATERIAL NUMBER	CUSTOMER	SHEET NUMBER
	GENERAL MARKET	3 OF 3

DOCUMENT STATUS	P1	RELEASE DATE	2021/02/26 10:23:45

FORMAT: master-lb-prod-A3
REVISION: J
DATE: 2020/01/14