Description

The HDMP2160UW uses advanced trench technology to provide excellent $R_{DS(ON)}$, This device is suitable for use as a load switch or in PWM applications.

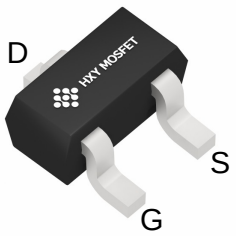

SOT-323

General Features

V_{DS} = -20V,I_D = -1.8A

$R_{DS(ON)}$ < 150mΩ @ V_{GS}=-4.5V

Application

Battery protection

Load switch

Uninterruptible power supply

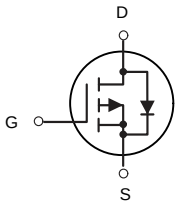

P-Channel MOSFET

Ordering Information

Product ID	Pack	Marking	Qty(PCS)
HDMP2160UW	SOT-323	TS1	3000

Absolute Maximum Ratings (TA=25℃unless otherwise noted)

Symbol	Parameter	Limit	Unit
V_{DS}	Drain-Source Voltage	-20	V
V_{GS}	Gate-Source Voltage	±8	V
I_D	Drain Current-Continuous	-1.8	A
I_{DM}	Drain Current-Pulsed (Note 1)	-3	A
P_D	Maximum Power Dissipation	0.29	W
T_J,T_{STG}	Operating Junction and Storage Temperature Range	-55 To 150	℃
$R_{\theta JA}$	Thermal Resistance,Junction-to-Ambient (Note 2)	431	℃/W

Electrical Characteristics (T_A=25℃unless otherwise noted)

Parameter	Symbol	Test conditions	Min	Typ	Max	Unit
STATIC CHARACTERISTICE						
Drain-source breakdown voltage	$V_{(BR)DSS}$	V_{GS} = 0V, I_D =-250μA	-20			V
Zero gate voltage drain current	I_{DSS}	V_{DS} =-18V,V_{GS} = 0V			-1	μA
Gate-body leakage current	I_{GSS}	V_{GS} =±12V, V_{DS} = 0V			±100	nA
Gate threshold voltage (note2)	$V_{GS(th)}$	V_{DS} =V_{GS}, I_D =-250μA	-0.4	-0.7	-1.0	V
Drain-source on-resistance (note2)	$R_{DS(on)}$	V_{GS} =-4.5V, I_D =-2A			150	mΩ
		V_{GS} =-2.5V, I_D =-1.0A			230	mΩ
Maximum Continuous Drain to Source Diode Forward Current	I_S	--			-1.0	A
Diode forward voltage	V_{SD}	I_S=-1.0A, V_{GS} =0V			-1.2	V
DYNAMIC CHARACTERISTICS (note3)						
Input capacitance	C_{iss}	V_{DS} =-8V,V_{GS} =0V, f =1MHz			680	pF
Output capacitance	C_{oss}				130	pF
Reverse transfer capacitance	C_{rss}				95	pF
SWITCHING CHARACTERISTICS (note3)						
Turn-on delay time	$t_{d(on)}$	V_{GS}=-4.5V,V_{DS}=-10V, I_D=-1.0A,R_G=5.1Ω			10	nS
Turn-on rise time	t_r				20	nS
Turn-off delay time	$t_{d(off)}$				35	nS
Turn-off fall time	t_f				18	nS

Notes:

1. Surface mounted on FR4 board using the minimum recommended pad size.
2. Pulse Test : Pulse Width=300μs, Duty Cycle=2%.
3. These parameters have no way to verify.

SOT-323 Package Outline Dimensions

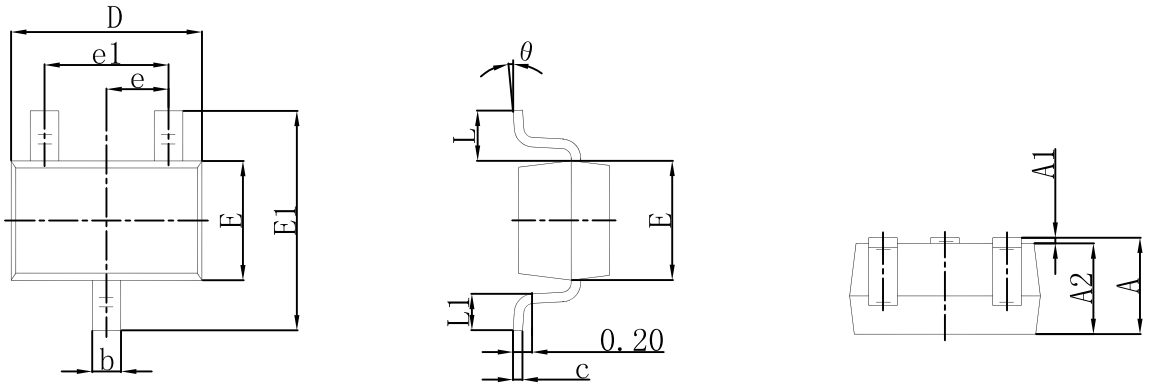

Symbol	Dimensions In Millimeters		Dimensions In Inches	
	Min	Max	Min	Max
A	0.900	1.100	0.035	0.043
A1	0.000	0.100	0.000	0.004
A2	0.900	1.000	0.035	0.039
b	0.200	0.400	0.008	0.016
c	0.080	0.150	0.003	0.006
D	2.000	2.200	0.079	0.087
E	1.150	1.350	0.045	0.053
E1	2.150	2.450	0.085	0.096
e	0.650 TYP		0.026 TYP	
e1	1.200	1.400	0.047	0.055
L	0.525 REF		0.021 REF	
L1	0.260	0.460	0.010	0.018
K	0°	8°	0°	8°

Attention

■ Any and all HUA XUAN YANG ELECTRONICS products described or contained herein do not have specifications that can handle applications that require extremely high levels of reliability, such as life-support systems, aircraft's control systems, or other applications whose failure can be reasonably expected to result in serious physical and/or material damage. Consult with your HUA XUAN YANG ELECTRONICS representative nearest you before using any HUA XUAN YANG ELECTRONICS products described or contained herein in such applications.

■ HUA XUAN YANG ELECTRONICS assumes no responsibility for equipment failures that result from using products at values that exceed, even momentarily, rated values (such as maximum ratings, operating condition ranges, or other parameters) listed in products specifications of any and all HUA XUAN YANG ELECTRONICS products described or contained herein.

■ Specifications of any and all HUA XUAN YANG ELECTRONICS products described or contained herein stipulate the performance, characteristics, and functions of the described products in the independent state, and are not guarantees of the performance, characteristics, and functions of the described products as mounted in the customer's products or equipment. To verify symptoms and states that cannot be evaluated in an independent device, the customer should always evaluate and test devices mounted in the customer's products or equipment.

■ HUA XUAN YANG ELECTRONICS CO.,LTD. strives to supply high-quality high-reliability products. However, any and all semiconductor products fail with some probability. It is possible that these probabilistic failures could
give rise to accidents or events that could endanger human lives, that could give rise to smoke or fire, or that could cause damage to other property. When designing equipment, adopt safety measures so that these kinds of accidents or events cannot occur. Such measures include but are not limited to protective circuits and error prevention circuits for safe design, redundant design, and structural design.

■ In the event that any or all HUA XUAN YANG ELECTRONICS products(including technical data, services) described or contained herein are controlled under any of applicable local export control laws and regulations, such products must not be exported without obtaining the export license from the authorities concerned in accordance with the above law.

■ No part of this publication may be reproduced or transmitted in any form or by any means, electronic or mechanical, including photocopying and recording, or any information storage or retrieval system, or otherwise, without the prior written permission of HUA XUAN YANG ELECTRONICS CO.,LTD.

■ Information (including circuit diagrams and circuit parameters) herein is for example only ; it is not guaranteed for volume production. HUA XUAN YANG ELECTRONICS believes information herein is accurate and reliable, but no guarantees are made or implied regarding its use or any infringements of intellectual property rights or other rights of third parties.

■ Any and all information described or contained herein are subject to change without notice due to product/technology improvement, etc. When designing equipment, refer to the "Delivery Specification" for the HUA XUAN YANG ELECTRONICS product that you intend to use.