SP6150 Series 100pF 30kV EMI Filter Array

RoHS Pb GREEN

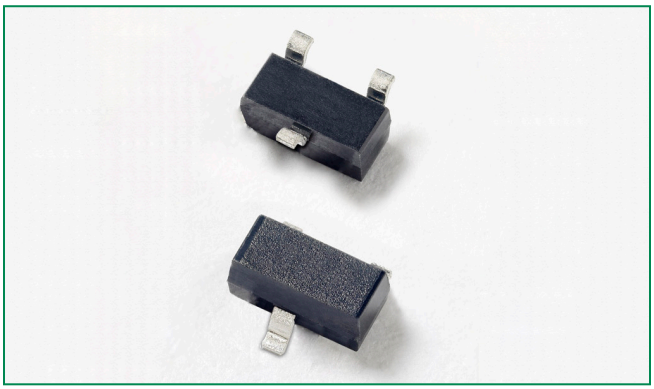

Description

The Littelfuse SP6150 SPA series integrates EMI filter (C-R-C) into SOT23-3 package providing greater than -25dB attenuation at 400MHz. Additionally, it is capable of shunting ±30kV ESD strikes (IEC61000-4-2, contact discharge) away from sensitive electronic components.

Functional Block Diagram

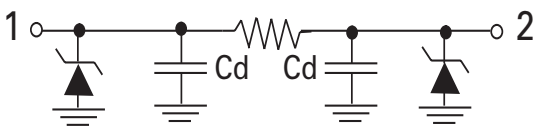

Features

- EMI filtering of frequencies from 400MHz to 3GHz
- ESD, IEC 61000-4-2, ±30kV contact, ±30kV air
- Moisture Sensitivity Level(MSL -1)
- Lead free and RoHS compliant

Pinout

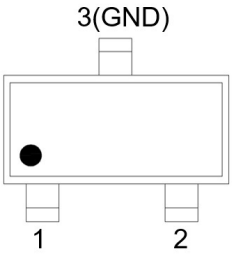

Applications

- Keypad interface for portable electronics
- LCD and camera display interfaces for handsets
- Connector interfaces for portable electronics
- Mobile phone
- Smartphone
- Portable navigation component

©2020 Littelfuse, Inc.
Specifications are subject to change without notice.
Revision: 12/21/20

Absolute Maximum Ratings

Symbol	Parameter	Value	Units
P_R	DC Power per Resistor	100	mW
T_{OP}	Operating Temperature	-40 to 125	°C
T_{STOR}	Storage Temperature	-55 to 150	°C

CAUTION: Stresses above those listed in "Absolute Maximum Ratings" may cause permanent damage to the component. This is a stress only rating and operation of the component at these or any other conditions above those indicated in the operational sections of this specification is not implied.

Electrical Characteristics (T_{OP}=25°C)

Parameter	Symbol	Test Conditions	Min	Typ	Max	Units
Reverse Standoff Voltage	V_{RWM}				5.0	V
Breakdown Voltage	V_{BR}	I_R=1mA	6.0			V
Reverse Leakage Current	I_{LEAK}	V_{RWM}=5V			1.0	µA
Resistance	R_A		40	50	57.5	Ω
Diode Capacitance[1,2]	C_D	V_R=0V,f=1MHz		50		pF
Line Capacitance[1,2]	C_L	V_R=0V,f=1MHz	80	100	120	pF
ESD Withstand Voltage[1]	V_{ESD}	IEC 61000-4-2 (Contact Discharge)	±30			kV
		IEC 61000-4-2 (Air Discharge)	±30			kV
Cutoff Frequency[3]	F_{-3dB}	Above this frequency, appreciable attenuation occurs	46	60		MHz

Notes: [1] Parameter is guaranteed by design and/or component characterization.
[2] Total line capacitance is two times the diode capacitance (C_D).
[3] 50Ω source and 50Ω load termination

Insertion Loss (S21)

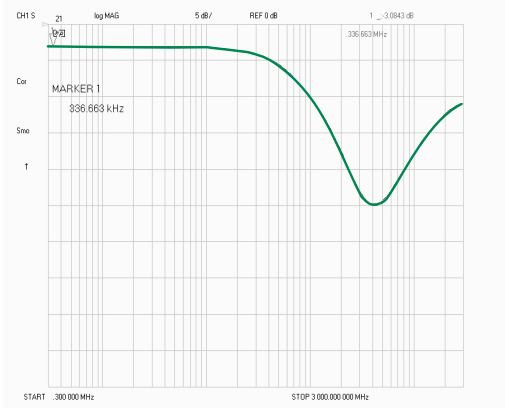

Line Capacitance vs. DC Bias

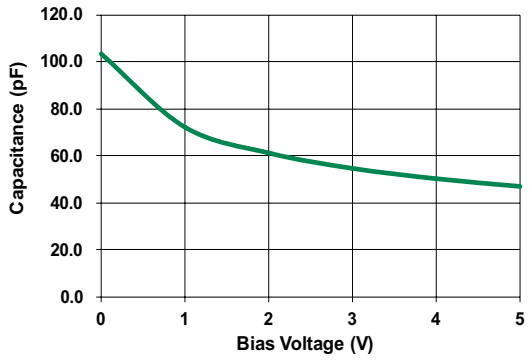

©2020 Littelfuse, Inc.
Specifications are subject to change without notice.

Positive Transmission Line Pulsing (TLP) Plot

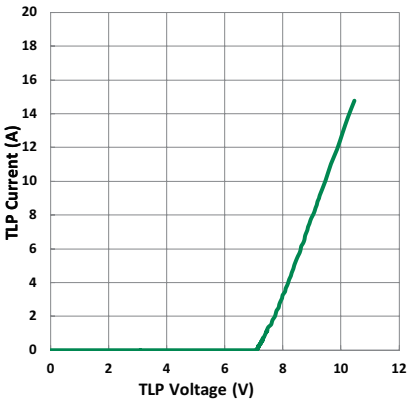

Negative Transmission Line Pulsing (TLP) Plot

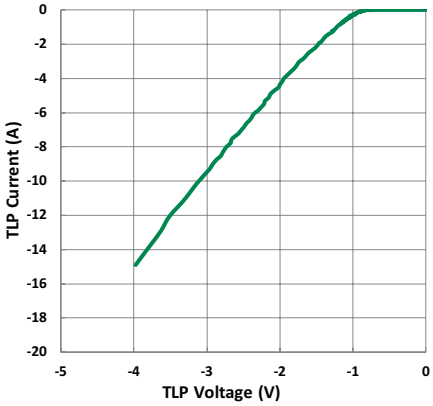

IEC 61000 -4-2 +8 kV Contact ESD Clamping Voltage

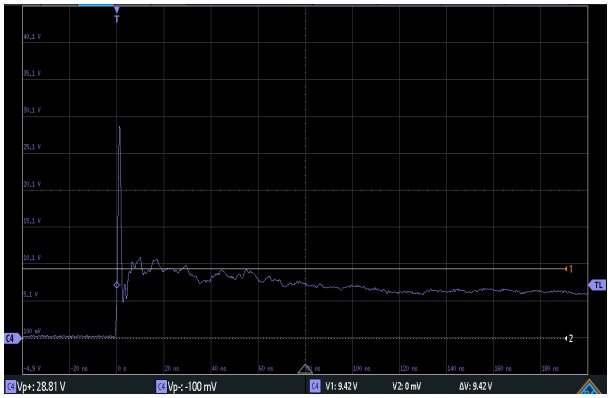

IEC 61000 -4-2 -8 kV Contact ESD Clamping Voltage



©2020 Littelfuse, Inc.
Specifications are subject to change without notice.
Revision: 12/21/20

Soldering Parameters

Reflow Condition		Pb – Free assembly
Pre Heat	-Temperature Min ($T_{s(min)}$)	150°C
	-Temperature Max ($T_{s(max)}$)	200°C
	-Time (min to max) (t_s)	60 – 180 secs
Average ramp up rate (Liquidus) Temp (T_L) to peak		3°C/second max
$T_{S(max)}$ to T_L - Ramp-up Rate		3°C/second max
Reflow	-Temperature (T_L) (Liquidus)	217°C
	-Temperature (t_L)	60 – 150 seconds
Peak Temperature (T_P)		$260^{+0/-5}$ °C
Time within 5°C of actual peak Temperature (t_p)		20 – 40 seconds
Ramp-down Rate		6°C/second max
Time 25°C to peak Temperature (T_P)		8 minutes Max.
Do not exceed		260°C

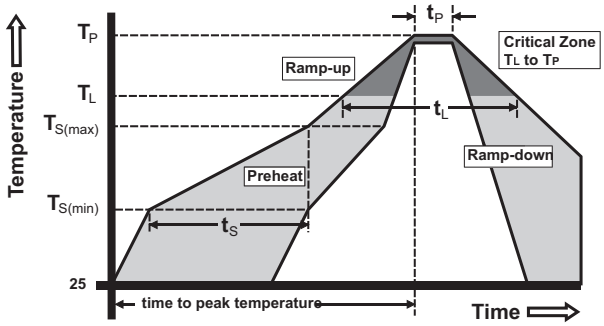

Product Characteristics

Lead Plating	Matte Tin
Lead Material	Copper Alloy
Lead Coplanarity	0.004 inches(0.102mm)
Substrate Material	Silicon
Body Material	Molded Compound
Flammability	UL Recognized compound meeting flammability rating V-0

Part Marking System

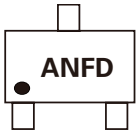

AN : Part code
F : Assembly code
D : Date code

Part Numbering System

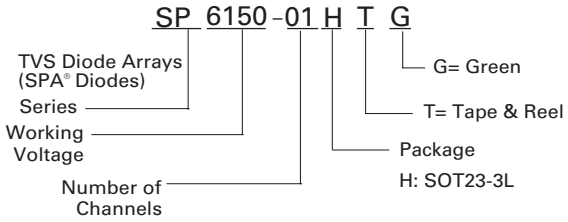

Ordering Information

Part Number	Package	Min. Order Qty.
SP6150-01HTG	SOT23-3L	3000

©2020 Littelfuse, Inc.
Specifications are subject to change without notice.
Revision: 12/21/20

Package Dimensions — SOT23-3

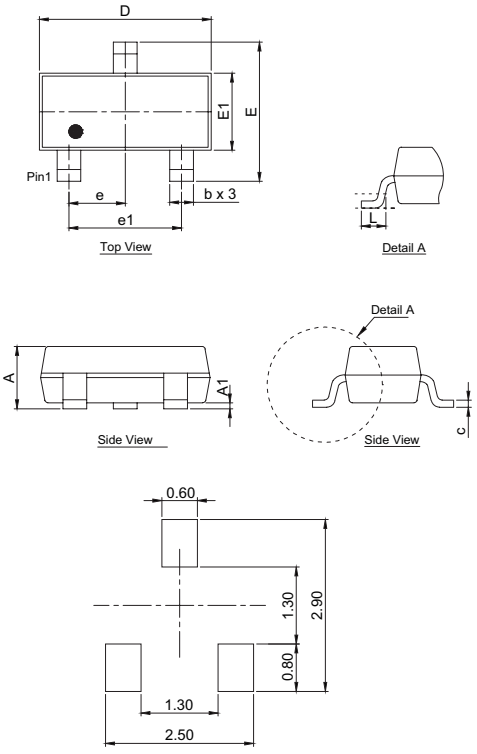

Recommended soldering pad layout (unit :mm)
Drawing# : H03-B

Package	SOT23-3			
Pins	3			
JEDEC	TO-236			
	Millimeters		Inches	
	Min	Max	Min	Max
A	0.90	1.15	0.035	0.045
A1	0.00	0.10	0.000	0.004
b	0.30	0.51	0.012	0.020
c	0.08	0.20	0.003	0.008
D	2.80	3.04	0.110	0.120
E	2.10	2.64	0.083	0.104
E1	1.20	1.40	0.047	0.055
e	0.95 BSC		0.038 BSC	
e1	1.90 BSC		0.075 BSC	
L	0.30	0.55	0.012	0.022

Embossed Carrier Tape & Reel Specification — SOT23-3

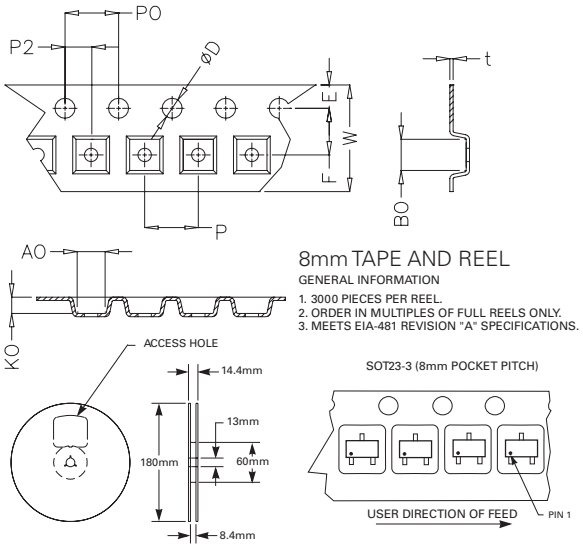

Symbol	Millimeters		Inches	
	Min	Max	Min	Max
E	1.65	1.85	0.065	0.073
F	3.40	3.60	0.134	0.142
P2	1.90	2.10	0.075	0.083
D	1.40	1.60	0.055	0.063
P0	3.90	4.10	0.154	0.161
W	7.70	8.30	0.303	0.327
P	3.90	4.10	0.154	0.161
A0	3.05	3.25	0.120	0.128
B0	2.67	2.87	0.105	0.113
K0	1.12	1.32	0.044	0.052
t	0.22	0.24	0.009	0.009

Product Disclaimer: Littelfuse products are not designed for, and shall not be used for, any purpose (including, without limitation, automotive, military, aerospace, medical, life-saving, life-sustaining or nuclear facility applications, devices intended for surgical implant into the body, or any other application in which the failure or lack of desired operation of the product may result in personal injury, death, or property damage) other than those expressly set forth in applicable Littelfuse product documentation. Warranties granted by Littelfuse shall be deemed void for products used for any purpose not expressly set forth in applicable Littelfuse documentation. Littelfuse shall not be liable for any claims or damages arising out of products used in applications not expressly intended by Littelfuse as set forth in applicable Littelfuse documentation. The sale and use of Littelfuse products is subject to Littelfuse Terms and Conditions of Sale, unless otherwise agreed by Littelfuse. "Littelfuse" includes Littelfuse, Inc., and all of its affiliate entities. http://www.littelfuse.com/disclaimer-electronics.

©2020 Littelfuse, Inc.
Specifications are subject to change without notice.

Revision: 12/21/20