DATASHEET

6 PIN DIP SCHMITT TRIGGER PHOTOCOUPLER
H11LX Series

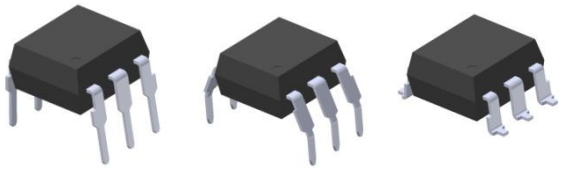

Schematic

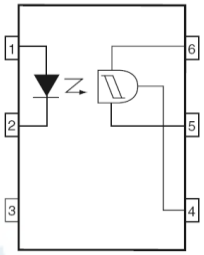

Pin Configuration
1. Anode
2. Cathode
3. No Connection
4. V_O
5. GND
6. V_{CC}

Features:

- High data rate, 1MHz typical (NRZ)
- Free from latch up and oscillation throughout voltage and temperature ranges.
- Microprocessor compatible drive
- Logic compatible output sinks 16mA at 0.4V maximum
- Guaranteed on/off threshold hysteresis
- Wide supply voltage capability, compatible with all popular logic systems
- High isolation voltage between input and output (Viso=5000 V rms)
- Compact dual-in-line package
- The product itself will remain within RoHS compliant version
- Compliance with EU REACH
- UL and cUL approved(No. E214129)
- VDE approved (No. 132249)
- SEMKO approved
- NEMKO approved
- DEMKO approved
- FIMKO approved
- CQC approved

Truth Table

Input	Output
H	L
L	H

Description

The H11LX series of devices each consist of a GaAs infrared emitting diode optically coupled a high speed integrated circuit detector. The output detector incorporates a Schmitt trigger, which provides hysteresis for noise immunity and pulse shaping.

The devices are in a 6-pin DIP package and available in wide-lead spacing and SMD option.

Applications

- Logic to logic isolator
- Programmable current level sensor
- Line receiver — eliminate noise and transient problems
- AC to TTL conversion — square wave shaping
- Digital programming of power supplies
- Interfaces computers with peripherals

Copyright © 2010, Everlight All Rights Reserved. Release Date : Aug 13, 2018. Issue No: DPC-0000022 Rev.6

Ver.:6 Release Date:08/14/2018 狀態:Approved(正式發行)

Absolute Maximum Ratings (Ta=25°C)

Parameter		Symbol	Rating	Unit
Input	Forward current	I_F	60	mA
	Reverse voltage	V_R	6	V
	Power dissipation	P_D	120	mW
Output	V_{45} Allowed Range	V_o	0 to 16	V
	V_{65} Allowed Range	V_{CC}	3 to 16	V
	Output Current	I_o	50	mA
	Power dissipation	P_D	150	mW
Total power dissipation		P_{tot}	250	mW
Isolation voltage		V_{iso}	5000	V rms
Operating temperature		T_{opr}	-55~+100	°C
Storage temperature		T_{stg}	-55~+125	°C
Soldering temperature *2		T_{sol}	260	°C

Notes:
*1 AC for 1 minute, R.H.= 40 ~ 60% R.H. In this test, pins 1, 2 & 3 are shorted together, and pins 4, 5 & 6 are shorted together.

*2 For 10 seconds

Copyright © 2010, Everlight All Rights Reserved. Release Date : Aug 13, 2018. Issue No: DPC-0000022 Rev.6

Ver.:6 Release Date:08/14/2018 承認:Approved(正式發行)

Electro-Optical Characteristics (Ta=25°C unless specified otherwise)

Input

Parameter	Symbol	Min.	Typ.*	Max.	Unit	Condition
Forward Voltage	V_F	-	1.15	1.5	V	I_F = 10mA
Reverse Current	I_R	-	-	10	μA	V_R = 5V
Input capacitance	C_J	-	-	100	pF	V=0, f=1MHz

Output

Parameter	Symbol	Min.	Typ.*	Max.	Unit	Condition
Operation Voltage Range	V_{CC}	3	-	15	V	
Supply Current	$I_{CC(off)}$	-	1.6	5	mA	I_F=0mA, Vcc=5V
Output Current, High	I_{OH}	-	-	100	μA	I_F=0mA, Vcc=Vo=15V
Isolation Resistance	R_{ISO}	10^{11}	-	-	Ω	V_{I-O}=500VDC

Transfer Characteristics

Parameter		Symbol	Min	Typ.	Max.	Unit	Condition
Supply Current		$I_{CC(on)}$	-	1.6	5	mA	I_F=10mA, Vcc=5V
Output Voltage .low		V_{OL}	-	-	0.4	V	Vcc=5V, I_F=I_{Fon}(max.), R_L=270Ω
Turn on Threshold Current [1]	H11L1	I_{Fon}	-	-	1.6	mA	Vcc=5V, R_L=270Ω
	H11L2		-	-	10		
	H11L3		-	-	5		
Turn off Threshold Current		I_{Foff}	-	1	-	mA	Vcc=5V, R_L=270Ω
Hysteresis Ratio		I_{Foff} /I_{Fon}	0.5	-	0.9		Vcc=5V, R_L=270Ω
Turn on Time		t_{on}	-	-	4	μS	Vcc=5V, I_F=I_{Fon}, R_L=270Ω
Fall Time		t_r	-	0.1	-	μS	
Turn off Time		t_{off}	-	-	4	μS	
Rise Time		t_r	-	0.1	-	μS	
Data Rate			-	1	-	MHz	

* Typical values at T_a = 25°C

[1]. Max. $I_{F(ON)}$ is the maximum current required to trigger the output. For examples, a 1.6mA maximum trigger current would require the LED to be driven at a current greater than 1.6mA to guarantee the device will turn on. A 10% guard band is recommended to account for degradation of the LED over its lifetime. The maximum allowable LED drive current is 60mA.

Copyright © 2010, Everlight All Rights Reserved. Release Date : Aug 13, 2018. Issue No: DPC-0000022 Rev.6

Ver.:6 Release Date:08/14/2018 狀態:Approved(正式發行)

Typical Electro-Optical Characteristics Curves

Figure 1. Forward Current vs Forward Voltage

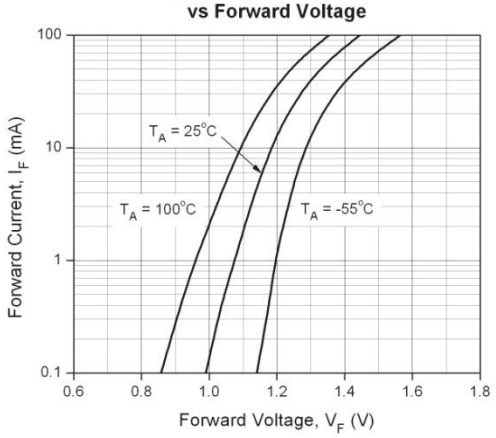

Figure 2. Transfer Characteristics

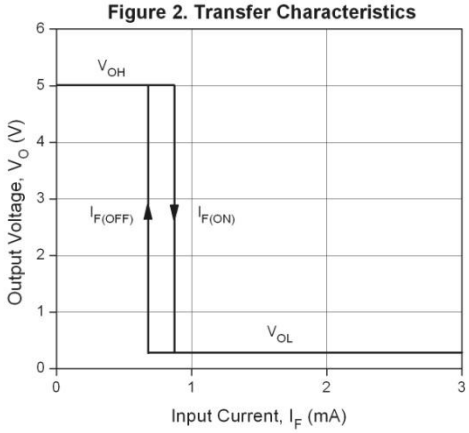

Figure 3. Turn On Threshold Current vs Supply Voltage

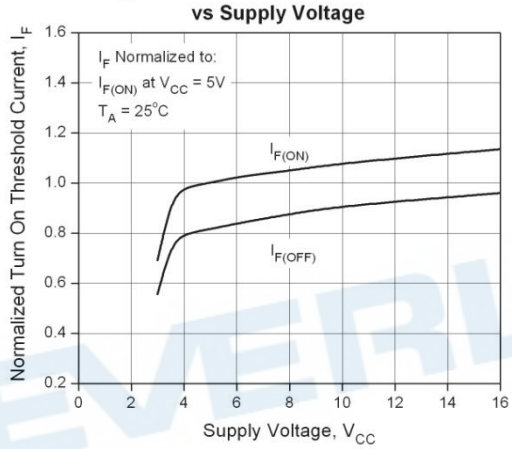

Figure 4. Turn On Threshold Current vs Ambient Temperature

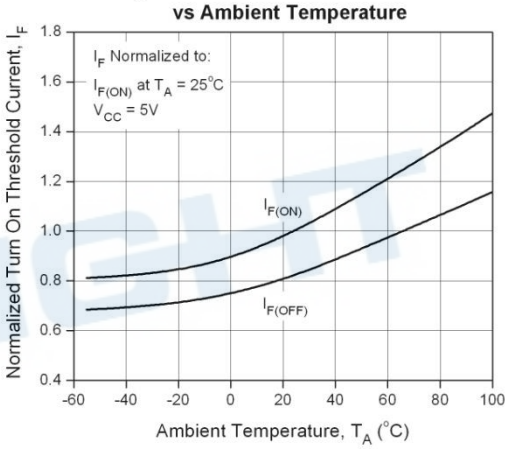

Figure 5. Low Level Output Voltage vs Load Current

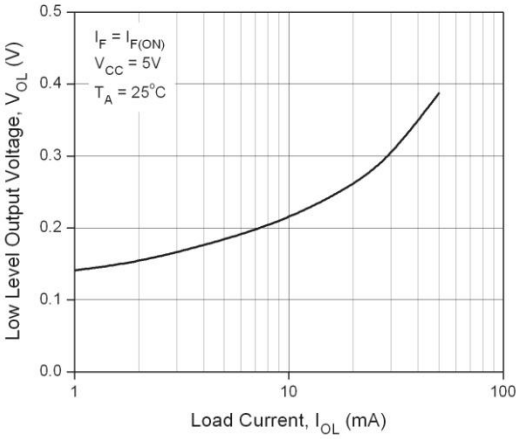

Figure 6. Supply Current vs Supply Voltage

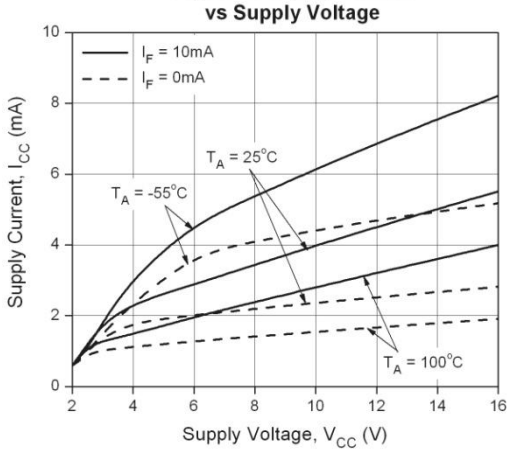

Copyright © 2010, Everlight All Rights Reserved. Release Date : Aug 13, 2018. Issue No: DPC-0000022 Rev.6
Ver.:6 Release Date:08/14/2018 狀態:Approved(正式發行)

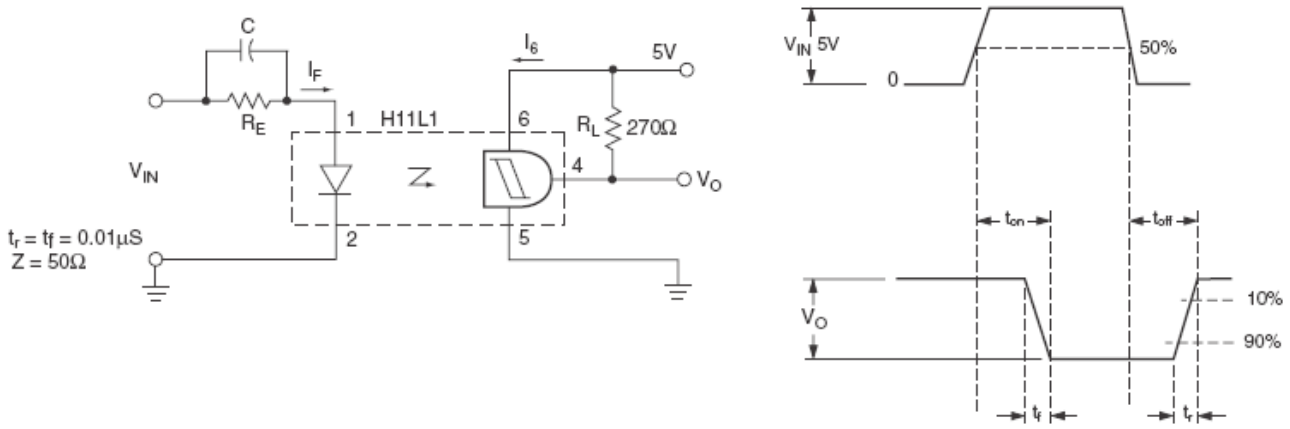

Figure 7. Switching Time Test Circuit & Waveforms

Order Information

Part Number

H11LXY(Z)-V

Note
X = Part No. for 1, 2 or 3
Y = Lead form option (S, S1, M or none)
Z = Tape and reel option (TA, TB or none).
V = VDE (optional)

Option	Description	Packing quantity
None	Standard DIP-6	65 units per tube
M	Wide lead bend (0.4 inch spacing)	65 units per tube
S + TA	Surface mount lead form + TA tape & reel option	1000 units per reel
S + TB	Surface mount lead form + TB tape & reel option	1000 units per reel
S1 + TA	Surface mount lead form (low profile) + TA tape & reel option	1000 units per reel
S1 + TB	Surface mount lead form (low profile) + TB tape & reel option	1000 units per reel

Copyright © 2010, Everlight All Rights Reserved. Release Date : Aug 13, 2018. Issue No: DPC-0000022 Rev.6
Ver.:6 Release Date:08/14/2018 狀態:Approved(正式發行)

Package Dimension (Dimensions in mm)

Standard DIP Type

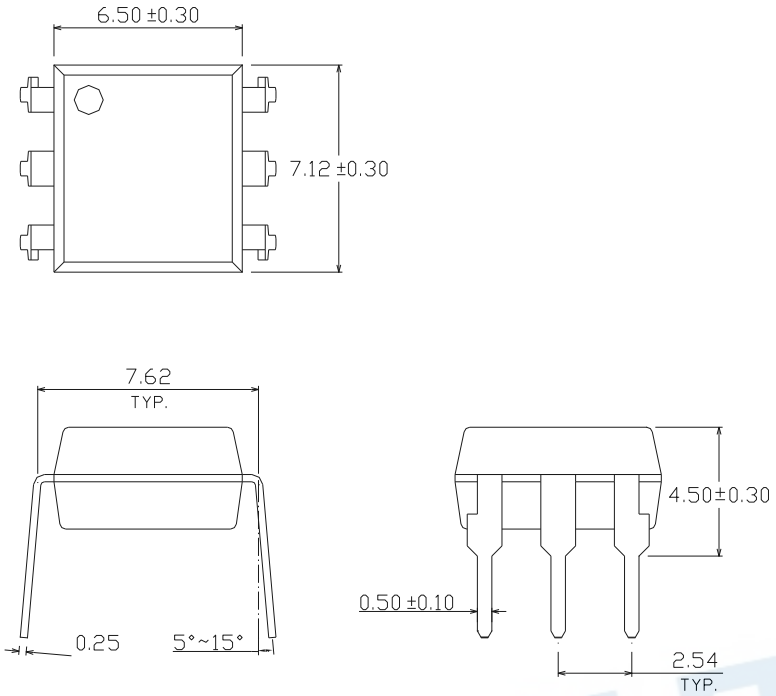

Option M Type

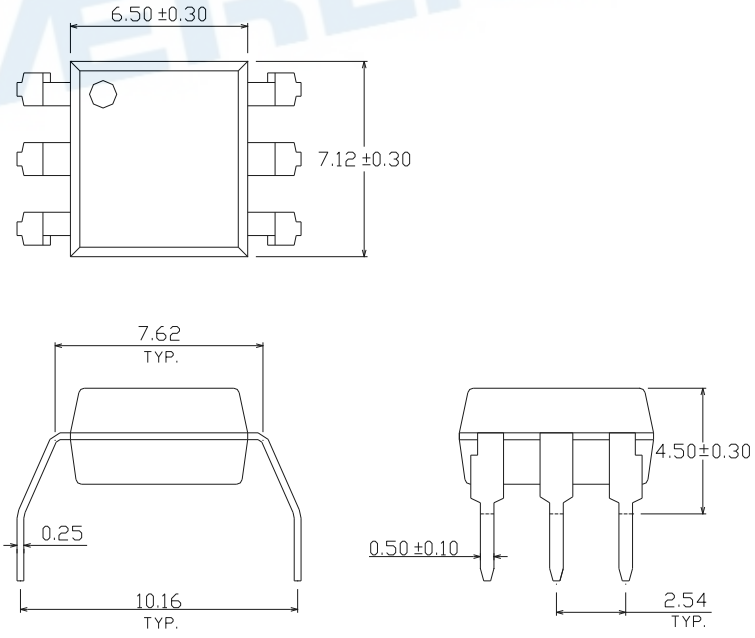

Copyright © 2010, Everlight All Rights Reserved. Release Date : Aug 13, 2018. Issue No: DPC-0000022 Rev.6

Ver.:6 Release Date:08/14/2018 承認:Approved(正式發行)

Option S Type

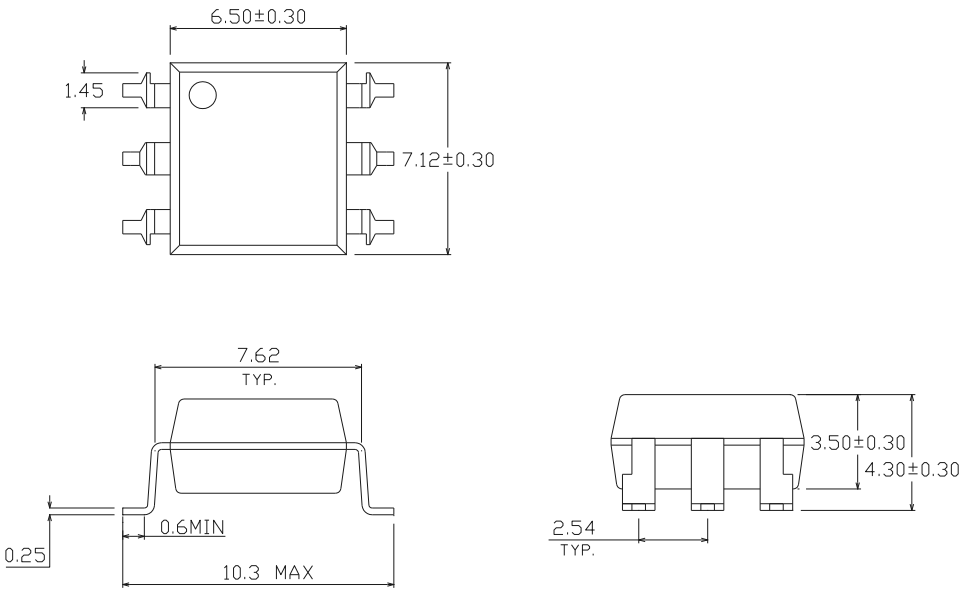

Option S1 Type

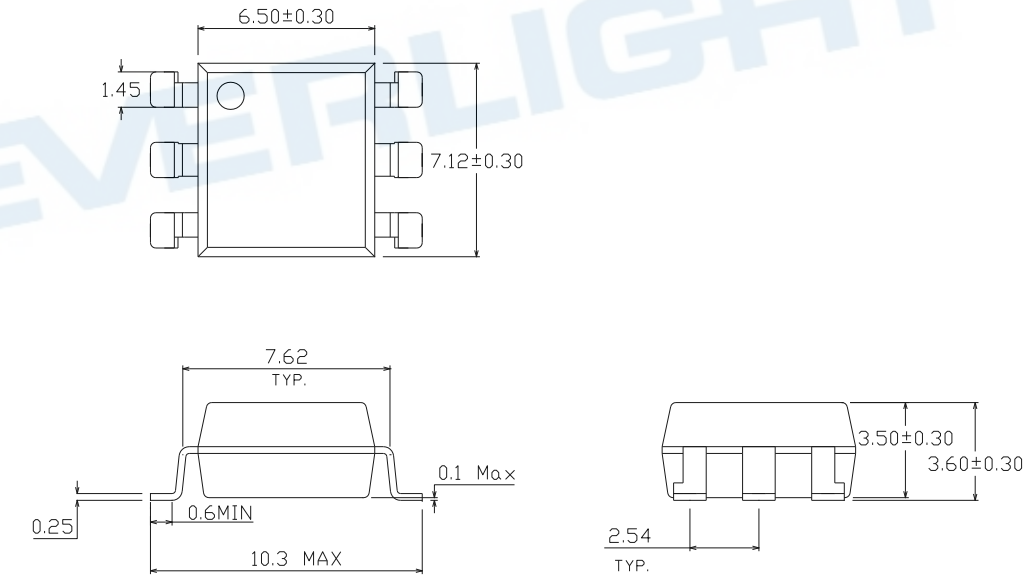

Copyright © 2010, Everlight All Rights Reserved. Release Date : Aug 13, 2018. Issue No: DPC-0000022 Rev.6

Ver.:6 Release Date:08/14/2018 承認:Approved(正式發行)

Recommended pad layout for surface mount leadform

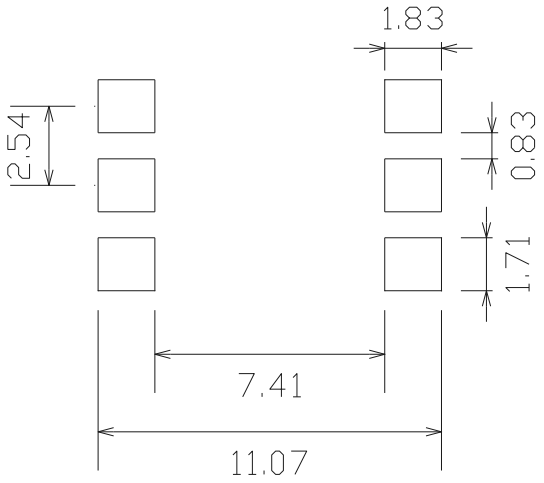

Notes

Suggested pad dimension is just for reference only.
Please modify the pad dimension based on individual need.

Device Marking

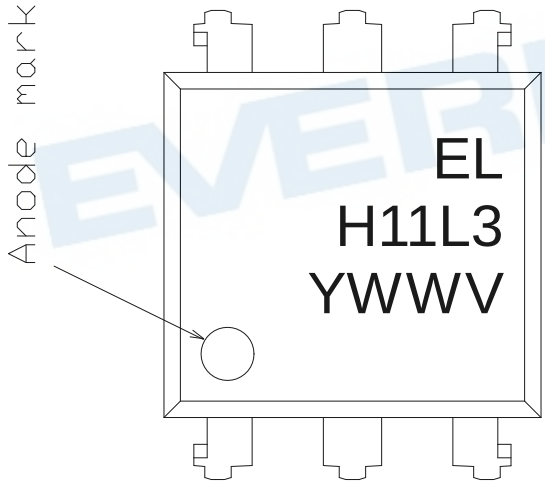

Notes

EL	denotes Everlight
H11L3	denotes Device Number
Y	denotes 1 digit Year code
WW	denotes 2 digit Week code
V	denotes VDE (optional)

Copyright © 2010, Everlight All Rights Reserved. Release Date : Aug 13, 2018. Issue No: DPC-0000022 Rev.6

Ver.:6 Release Date:08/14/2018 承認:Approved(正式發行)

Tape & Reel Packing Specifications

Option TA

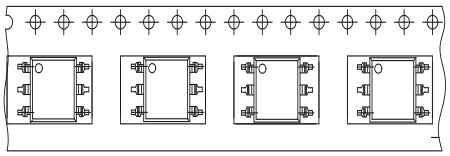

Direction of feed from reel

Option TB

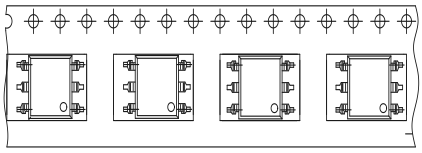

Direction of feed from reel

Tape dimensions

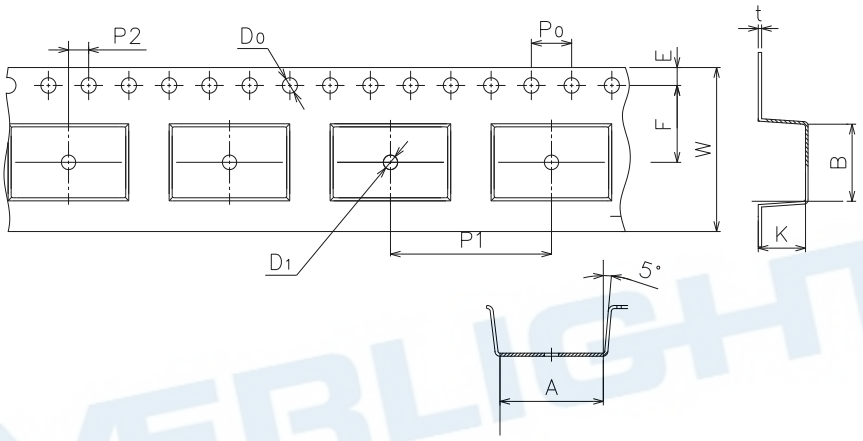

Dimension No.	A	B	Do	D1	E	F
Dimension(mm)	10.8±0.1	7.55±0.1	1.5±0.1	1.5+0.1/-0	1.75±0.1	7.5±0.1
Dimension No.	**Po**	**P1**	**P2**	**t**	**W**	**K**
Dimension(mm)	4.0±0.15	12±0.1	2.0±0.1	0.35±0.03	16.0±0.2	4.5±0.1

Copyright © 2010, Everlight All Rights Reserved. Release Date : Aug 13, 2018. Issue No: DPC-0000022 Rev.6

Ver.:6 Release Date:08/14/2018 狀態:Approved(正式發行)

Precautions for Use

1. Soldering Condition

1.1 (A) Maximum Body Case Temperature Profile for evaluation of Reflow Profile

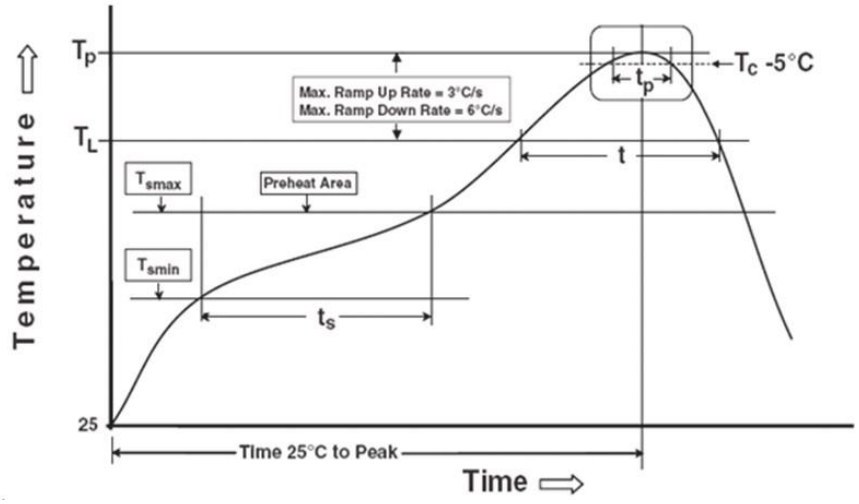

Note: Reference: IPC/JEDEC J-STD-020D

Preheat

Temperature min (T_{smin})	150 °C
Temperature max (T_{smax})	200°C
Time (T_{smin} to T_{smax}) (t_s)	60-120 seconds
Average ramp-up rate (T_{smax} to T_p)	3 °C/second max

Other

Liquidus Temperature (T_L)	217 °C
Time above Liquidus Temperature (t_L)	60-100 sec
Peak Temperature (T_P)	260°C
Time within 5 °C of Actual Peak Temperature: T_P - 5°C	30 s
Ramp- Down Rate from Peak Temperature	6°C /second max.
Time 25°C to peak temperature	8 minutes max.
Reflow times	3 times

.

Copyright © 2010, Everlight All Rights Reserved. Release Date : Aug 13, 2018. Issue No: DPC-0000022 Rev.6

Ver.:6 Release Date:08/14/2018 狀態:Approved(正式發行)

DISCLAIMER

1. Above specification may be changed without notice. EVERLIGHT will reserve authority on material change for above specification.
2. The graphs shown in this datasheet are representing typical data only and do not show guaranteed values.
3. When using this product, please observe the absolute maximum ratings and the instructions for use outlined in these specification sheets. EVERLIGHT assumes no responsibility for any damage resulting from use of the product which does not comply with the absolute maximum ratings and the instructions included in these specification sheets.
4. These specification sheets include materials protected under copyright of EVERLIGHT. Reproduction in any form is prohibited without the specific consent of EVERLIGHT.
5. This product is not intended to be used for military, aircraft, automotive, medical, life sustaining or life saving applications or any other application which can result in human injury or death. Please contact authorized Everlight sales agent for special application request.
6. Statements regarding the suitability of products for certain types of applications are based on Everlight's knowledge of typical requirements that are often placed on Everlight products in generic applications. Such statements are not binding statements about the suitability of products for a particular application. It is the customer's responsibility to validate that a particular product with the properties described in the product specification is suitable for use in a particular application. Parameters provided in datasheets and/or specifications may vary in different applications and performance may vary over time. All operating parameters, including typical parameters, must be validated for each customer application by the customer's technical experts. Product specifications do not expand or otherwise modify Everlight's terms and conditions of purchase, including but not limited to the warranty expressed therein.

Copyright © 2010, Everlight All Rights Reserved. Release Date : Aug 13, 2018. Issue No: DPC-0000022 Rev.6

Ver.:6 Release Date:08/14/2018 承認:Approved(正式發行)