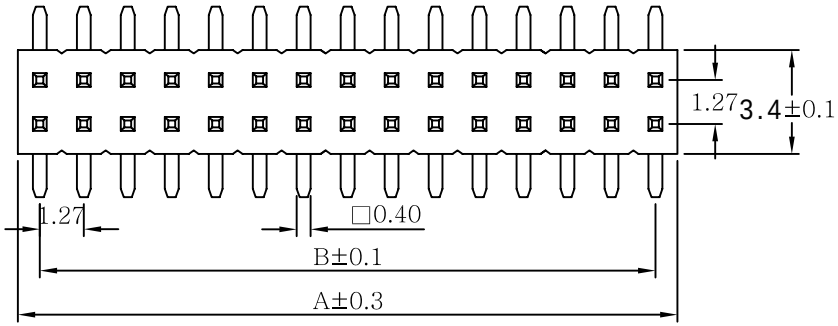

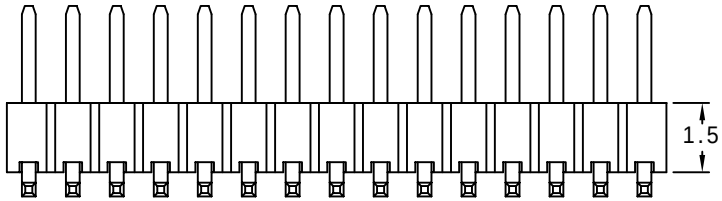

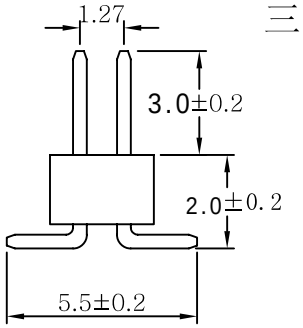

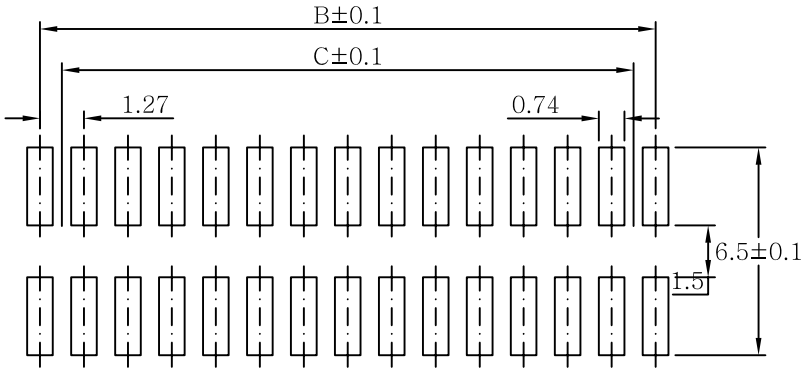

P.C.B Layout

一.电气性能:

1-1.额定电流: 3A AC DC.

1-2.接触电阻: ≤20mΩ

1-3.绝缘电阻: ≥1000MΩ

1-4.耐　　压: 550V AC/Minute

二.物理特性:

2-1.操作温度: -55℃～105℃

2-2.焊接温度: +260℃, 10s max

三.材质:

3-1.塑胶: PA6T(Black) UL94V-0

3-2.插针: Brass/Gold plated

PIN	A	B	C
4	5.08	3.81	2.54
5	6.35	5.08	3.81
6	7.62	6.35	5.08
7	8.89	7.62	6.35
8	10.16	8.89	7.62
9	11.43	10.16	8.89
10	12.70	11.43	10.16
11	13.97	12.70	11.43
12	15.24	13.97	12.70
13	16.51	15.24	13.97
14	17.78	16.51	15.24
15	19.05	17.78	16.51
16	20.32	19.05	17.78
17	21.59	20.32	19.05
18	22.86	21.59	20.32
19	24.13	22.86	21.59
20	25.40	24.13	22.86
21	26.67	25.40	24.13
22	27.94	26.67	25.40
23	29.21	27.94	26.67
24	30.48	29.21	27.94
25	31.75	30.48	29.21
26	33.02	31.75	30.48
27	34.29	33.02	31.75
28	35.56	34.29	33.02
29	36.83	35.56	34.29
30	38.10	36.83	35.56
31	39.37	38.10	36.83
32	40.64	39.37	38.10
33	41.91	40.64	39.37
34	43.18	41.91	40.64
35	44.45	43.18	41.91
36	45.72	44.45	43.18
37	46.99	45.72	44.45
38	48.26	46.99	45.72
39	49.53	48.26	46.99
40	50.80	49.53	48.26
41	52.07	50.80	49.53
42	53.34	52.07	50.80
43	54.61	53.34	52.07
44	55.88	54.61	53.34
45	57.15	55.88	54.61
46	58.42	57.15	55.88
47	59.69	58.42	57.15
48	60.96	59.69	58.42
49	62.23	60.96	59.69
50	63.50	62.23	60.96

浙江博穆精密电子有限公司	图名:	1.27-LT-2xNAT	未标注公差				绘制:	韩金锋	单位: MM
			XX.	±0.40	XX.°	±2°	签发:	吴清锋	比例: 1:1
	图号:	1027-LT-3.0MM	X.	±0.30	.XX°	±1°			
			.X	±0.20			审核:	陈炳清	视图:
			.XX	±0.15					