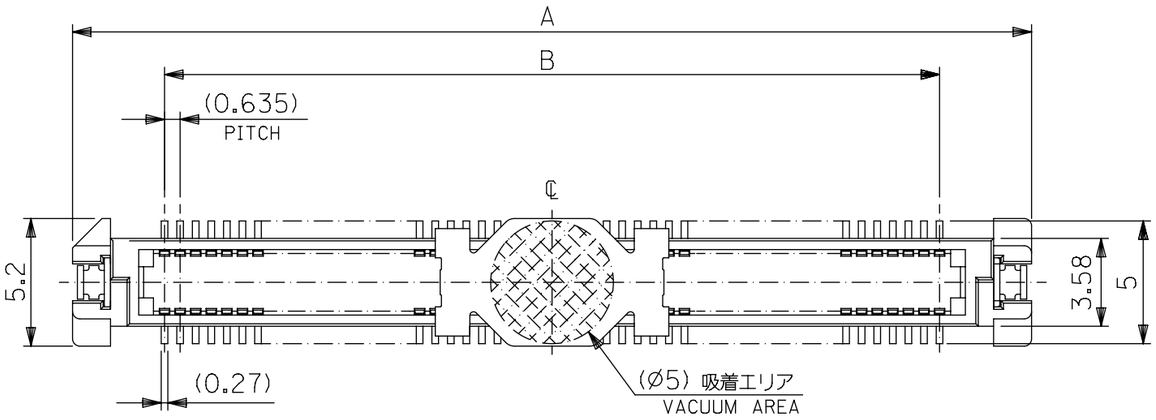

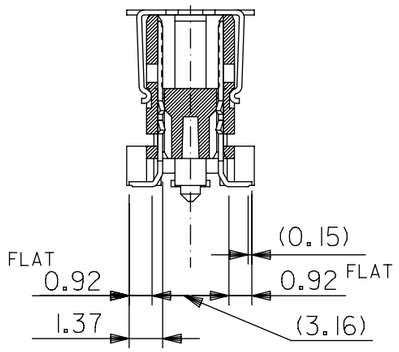

半田付け部詳細図
DETAIL FOR SOLDERING AREA

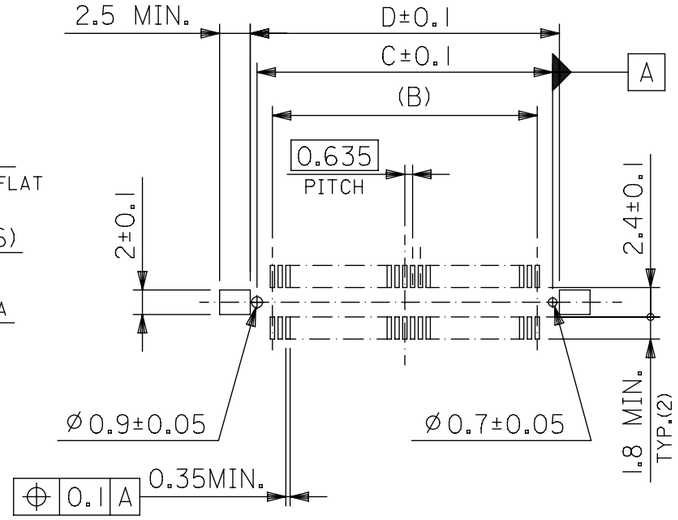

推奨基板寸法
RECOMMENDED PCB PATTERN LAYOUT
(SCALE 2:1)

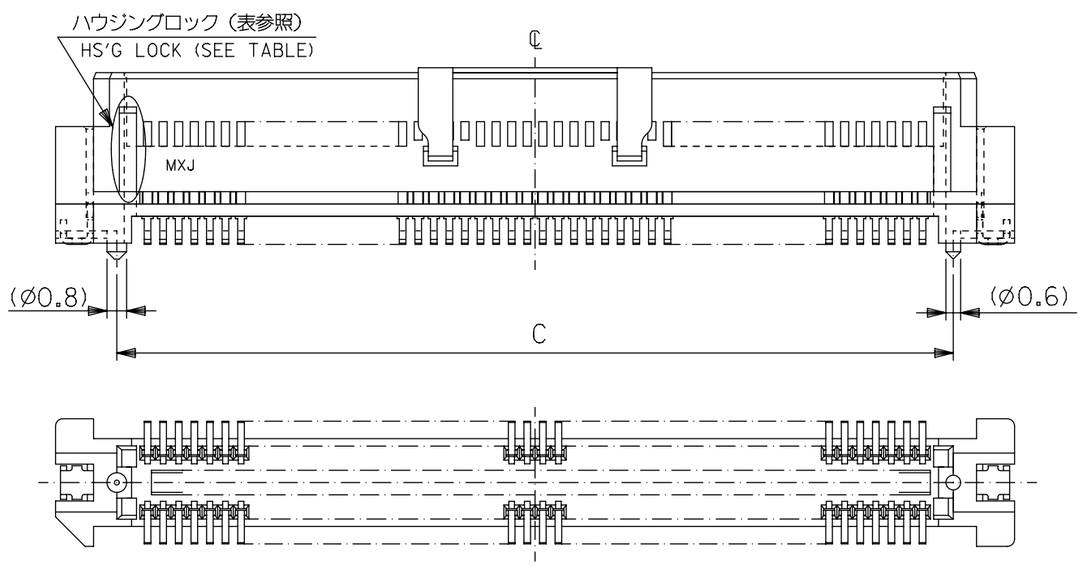

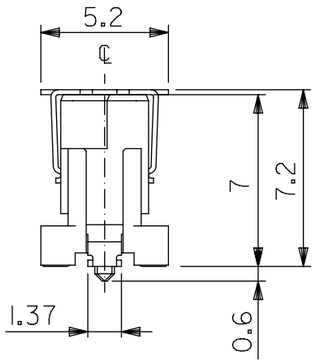

注）
NOTES

1. 材質
   MATERIAL
   ハウジング：ガラス入りＰＰＳ、茶色、ＵＬ９４Ｖ－０
   HOUSING:G.F.PPS,BROWN,UL94V-0
   ターミナル：銅合金　（ｔ＝ 0.2 ）
   TERMINAL:COPPER ALLOY
   吸着カバー：ステンレス　（ｔ＝ 0.2 ）
   VACUUM COVER:STAINLESS STEEL
2. メッキ仕様
   PLATING
   接点部　　：金メッキ　0.25μmＭＩＮ。
   CONTACT AREA : GOLD 0.25 MICROMETER MIN.
   半田付け部：錫メッキ　1.0 μmMIN.
   SOLDER TAIL AREA : TIN 1.0 MICROMETER MIN.
   下地メッキ：ニッケルメッキ　1.5μmＭＩＮ。
   UNDER-PLATING : NICKEL 1.5 MICROMETER MIN.
3. テールのバラツキ寸法
   TAIL COPLANARITY
   テール平坦度は、0.1 MAX.とする。
   TAILS COPLANARITY TO BE 0.1MAX.
4. 本製品は 53647-***2 の鉛フリー品である。
   THIS PRODUCT IS LEAD FREE OF 53647-***2.

無し WITHOUT	53.77	52.67	50.165	57.67	53647-1674	160
	47.42	46.32	43.815	51.32	53647-1474	140
	41.07	39.97	37.465	44.97	53647-1274	120
	34.72	33.62	31.115	38.62	53647-1074	100
	28.37	27.27	24.765	32.27	53647-0874	80
有り WITH	22.02	20.92	18.415	25.92	53647-0674	60
	15.67	14.57	12.065	19.57	53647-0474	40
	12.5	11.4	8.89	16.4	53647-0374	30
	9.32	8.22	5.715	13.22	53647-0274	20
ハウジングロック HSG LOCK	D	C	B	A	エンボス梱包 EMBOSSED PACKAGE / オーダー番号 ORDER NO.	極数 CKT

GENERAL TOLERANCES (UNLESS SPECIFIED)	
10 UNDER	± 0.2
10 OVER 30 UNDER	± 0.25
30 OVER	± 0.3
ANGULAR	± 3 °

DRAFT WHERE APPLICABLE MUST REMAIN WITHIN DIMENSIONS

THIS DRAWING CONTAINS INFORMATION THAT IS PROPRIETARY TO MOLEX ELECTRONIC TECHNOLOGIES, LLC AND SHOULD NOT BE USED WITHOUT WRITTEN PERMISSION

DIMENSION UNITS	SCALE
mm	-

GENERAL TOLERANCES (UNLESS SPECIFIED)	
ANGULAR TOL	± 3.0 °
4 PLACES	± 0.2
3 PLACES	± 0.25
2 PLACES	± 0.3
1 PLACE	±
0 PLACES	±

DRAFT WHERE APPLICABLE MUST REMAIN WITHIN DIMENSIONS

CURRENT REV DESC:

EC NO: 612735
DRWN: GSHARMA 2019/02/26
CHK'D: MSASAO 2019/02/26
APPR: MSASAO 2019/02/26

INITIAL REVISION:
DRWN: YWADA 2004/03/23
APPR: MSASAO 2004/03/24

molex

0.635 PITCH B-TO-B
PLUG HS'G COVER ASS'Y -LEAD FREE-

PRODUCT CUSTOMER DRAWING

DOCUMENT NUMBER	DOC TYPE	DOC PART	REVISION
SD-53647-002	PSD	001	H1

THIRD ANGLE PROJECTION	DRAWING	SERIES	MATERIAL NUMBER	CUSTOMER	SHEET NUMBER
	A3-SIZE	53647	SEE CHART	GENERAL MARKET	1 OF 2

DOCUMENT STATUS	P1	RELEASE DATE	2019/02/26 07:19:48

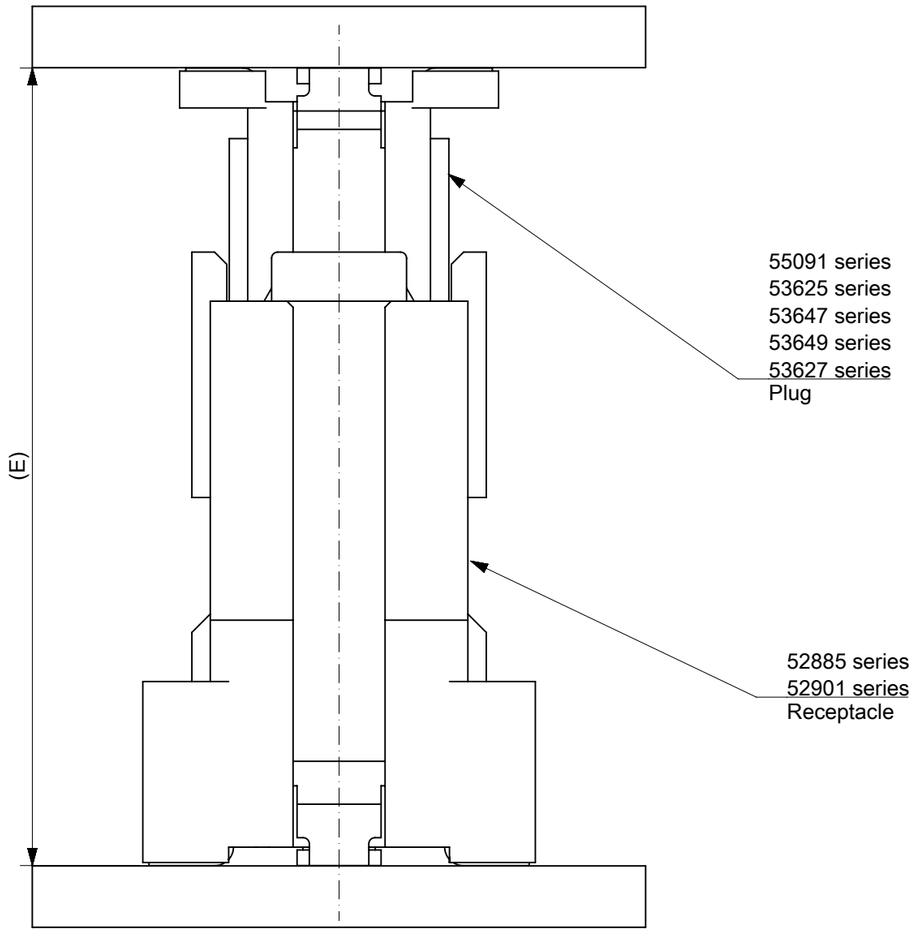

嵌合高さ一覧
Stacking Height variation

	6	52885 series	55091 series
	7		53625 series
○	8		53647 series
	9		53649 series
	10		53627 series
	12	52901 series	55091 series
	13		53625 series
○	14		53647 series
	15		53649 series
	16		53627 series
本図製品該当高さ Height Application	嵌合高さ E Stacking Height	リセプタクル Receptacle	プラグ Plug

GENERAL TOLERANCES (UNLESS SPECIFIED)	
10 UNDER	± 0.2
10 OVER 30 UNDER	± 0.25
30 OVER	± 0.3
ANGULAR	± 3 °

DRAFT WHERE APPLICABLE MUST REMAIN WITHIN DIMENSIONS

THIS DRAWING CONTAINS INFORMATION THAT IS PROPRIETARY TO MOLEX ELECTRONIC TECHNOLOGIES, LLC AND SHOULD NOT BE USED WITHOUT WRITTEN PERMISSION

DIMENSION UNITS	SCALE
mm	-

GENERAL TOLERANCES (UNLESS SPECIFIED)

ANGULAR TOL	± 30 '
4 PLACES	± 0.2
3 PLACES	± 0.25
2 PLACES	± 0.3
1 PLACE	±
0 PLACES	±

DRAFT WHERE APPLICABLE MUST REMAIN WITHIN DIMENSIONS

CURRENT REV DESC:

EC NO: 612735
DRWN: GSHARMA 2019/02/26
CHK'D: MSASAO 2019/02/26
APPR: MSASAO 2019/02/26

INITIAL REVISION:
DRWN: YWADA 2004/03/23
APPR: MSASAO 2004/03/24

molex

0.635 PITCH B-TO-B
PLUG HS'G COVER ASS'Y -LEAD FREE-

PRODUCT CUSTOMER DRAWING

DOCUMENT NUMBER	DOC TYPE	DOC PART	REVISION
SD-53647-002	PSD	001	H1

THIRD ANGLE PROJECTION	DRAWING	SERIES	MATERIAL NUMBER	CUSTOMER	SHEET NUMBER
	A3-SIZE	53647	SEE CHART	GENERAL MARKET	2 OF 2

DOCUMENT STATUS	P1	RELEASE DATE	2019/02/26 07:19:48

FORMAT: master-lb-prod-A3
REVISION: H
DATE: 2018/01/18

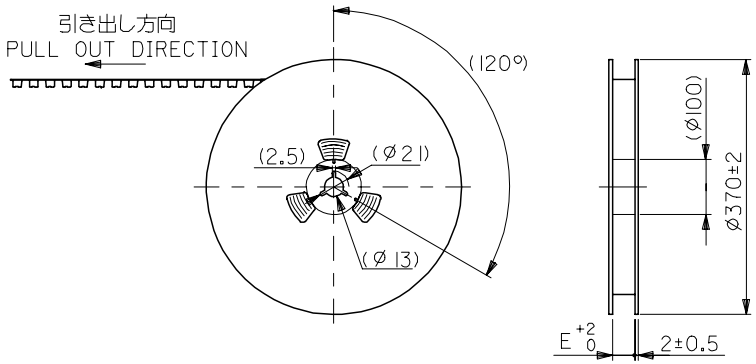

注）
NOTES

1. 製品番号 53647-***9 の詳細寸法については、SD-53647-002 を参照下さい。
IN THE PACKAGE , PART NO. 53647-***9 DETAILED DIMENSIONS , SEE SD-53647-002

2. 梱包数量 ： ８４０個／リール
NUMBER OF CONNECTORS : 840 PCS/REEL

3. リードテープ長さ
LEAD TAPE LENGTH

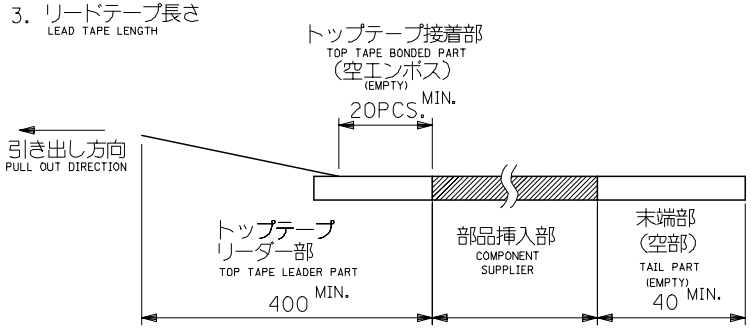

4. トップテープの剥離強度 （剥離方向は下図参照）
PEELING OFF FORCE OF TOP TAPE (PEELING DIRECTION AS SHOWN IN FOLLOWING FIG.)
０．１～１．３Ｎ {１０～１３０ｇｆ}
尚、本規格値は、出荷時に適用。
THIS REQUIREMENT SHOULD BE APPLIED AT SHIPMENT
（但し、輸送時に剥離が発生しない事。）
(PEEL OFF SHOULD NOT BE ALLOWED,DURING TRANSPORTATION)

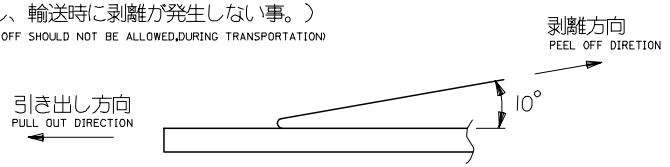

5. 材料
MATERIAL
キャリアテープ ：ポリプロピレン（ＰＰ）
CARRIER TAPE : POLYPROPYLENE (PP)
トップテープ ：ＰＥＴ，ＰＥ，ＰＥＦ
TOP TAPE : PET , PE , PEF
リール ：紙
REEL : CARD BOARD

6. 本製品は５３６４７－＊＊＊４の鉛フリー品である。
THIS PRODUCT IS LEAD FREE OF 53647-***4.

REVISED EC NO: J2006-1852 DRWN:MNABEI 2005/12/02 CH'KD:KTOYODA 2005/12/05 APPR:NUKITA 2005/12/14	GENERAL TOLERANCES (UNLESS SPECIFIED)	DIMENSION STYLE: MM ONLY	SCALE: ---	DESIGN UNITS: METRIC	MODEL NO. 53647-**74 THIRD ANGLE PROJECTION
	10 UNDER ±---	DRAWN BY: Y.WADA DATE: '04/03/01	TITLE: 53647-***9 TAPING PACKAGE -LEAD FREE-		
	10 OVER 30 UNDER ±---	CHECKED BY: M.SASAO DATE: '04/03/01			
	30 OVER ±---	APPROVED BY: M.SASAO DATE: '04/03/01	molex MOLEX INCORPORATED		
	ANGULAR ±--- °	MATERIAL NO.: SEE CHART	DOCUMENT NO.: SD-53647-003		SHEET NO.: 1 OF 3
C	DRAFT WHERE APPLICABLE MUST REMAIN WITHIN DIMENSIONS	SIZE: A3	THIS DRAWING CONTAINS INFORMATION THAT IS PROPRIETARY TO MOLEX INCORPORATED AND SHOULD NOT BE USED WITHOUT WRITTEN PERMISSION		

REV / DESCRIPTION

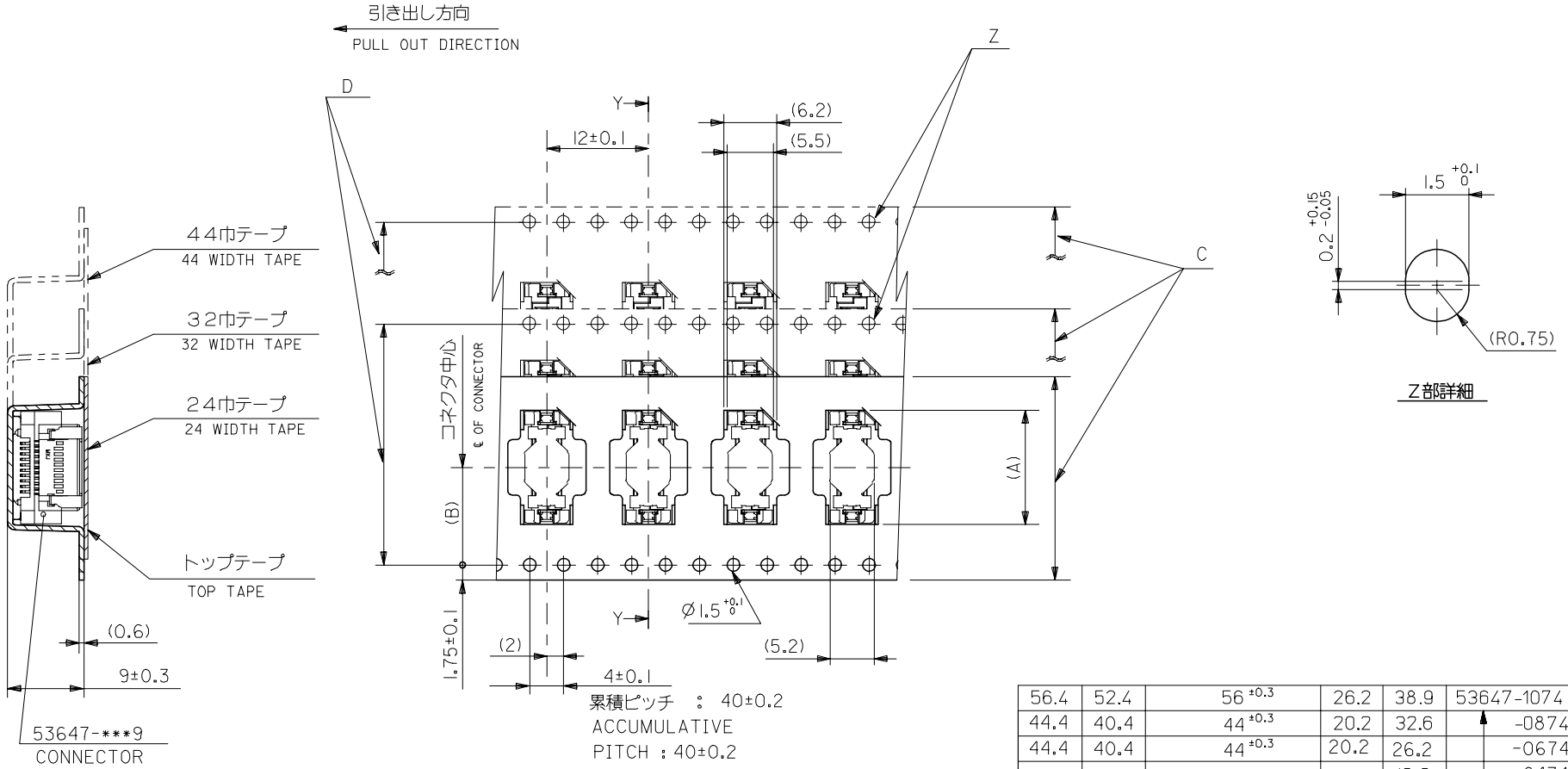

E	D	C キャリアテープ幅 CARRIER TAPE WIDTH	(B)	(A)	MATERIAL NO.	極数 NO. OF CKTS.
56.4	52.4	56 ±0.3	26.2	38.9	53647-1074	100
44.4	40.4	44 ±0.3	20.2	32.6	-0874	80
44.4	40.4	44 ±0.3	20.2	26.2	-0674	60
32.4	28.4	32 ±0.3	14.2	19.9	-0474	40
				16.7	-0374	30
24.4	〃	24 ±0.3	11.5	13.5	53647-0274	20

REVISED				REV
EC NO: J2006-1852	2005/12/02			C
DRWN:MNABE I	2005/12/05			
CHKD:KTOYODA	2005/12/14			
APPR:NUKITA				

GENERAL TOLERANCES (UNLESS SPECIFIED)	
10 UNDER	±---
10 OVER 30 UNDER	±---
30 OVER	±---
ANGULAR	±--- °

DRAFT WHERE APPLICABLE MUST REMAIN WITHIN DIMENSIONS

DIMENSION STYLE: MM ONLY	SCALE: ---	MODEL NO.: 53647-**74	
	DESIGN UNITS: METRIC	THIRD ANGLE PROJECTION	
DRAWN BY: Y.WADA	DATE: '04/03/01	TITLE: 53647-***9 TAPING PACKAGE -LEAD FREE-	
CHECKED BY: M.SASAO	DATE: '04/03/01		
APPROVED BY: M.SASAO	DATE: '04/03/01	molex MOLEX INCORPORATED	
MATERIAL NO.: SEE CHART		DOCUMENT NO.: SD-53647-003	SHEET NO.: 2 OF 3

SIZE A3

THIS DRAWING CONTAINS INFORMATION THAT IS PROPRIETARY TO MOLEX INCORPORATED AND SHOULD NOT BE USED WITHOUT WRITTEN PERMISSION

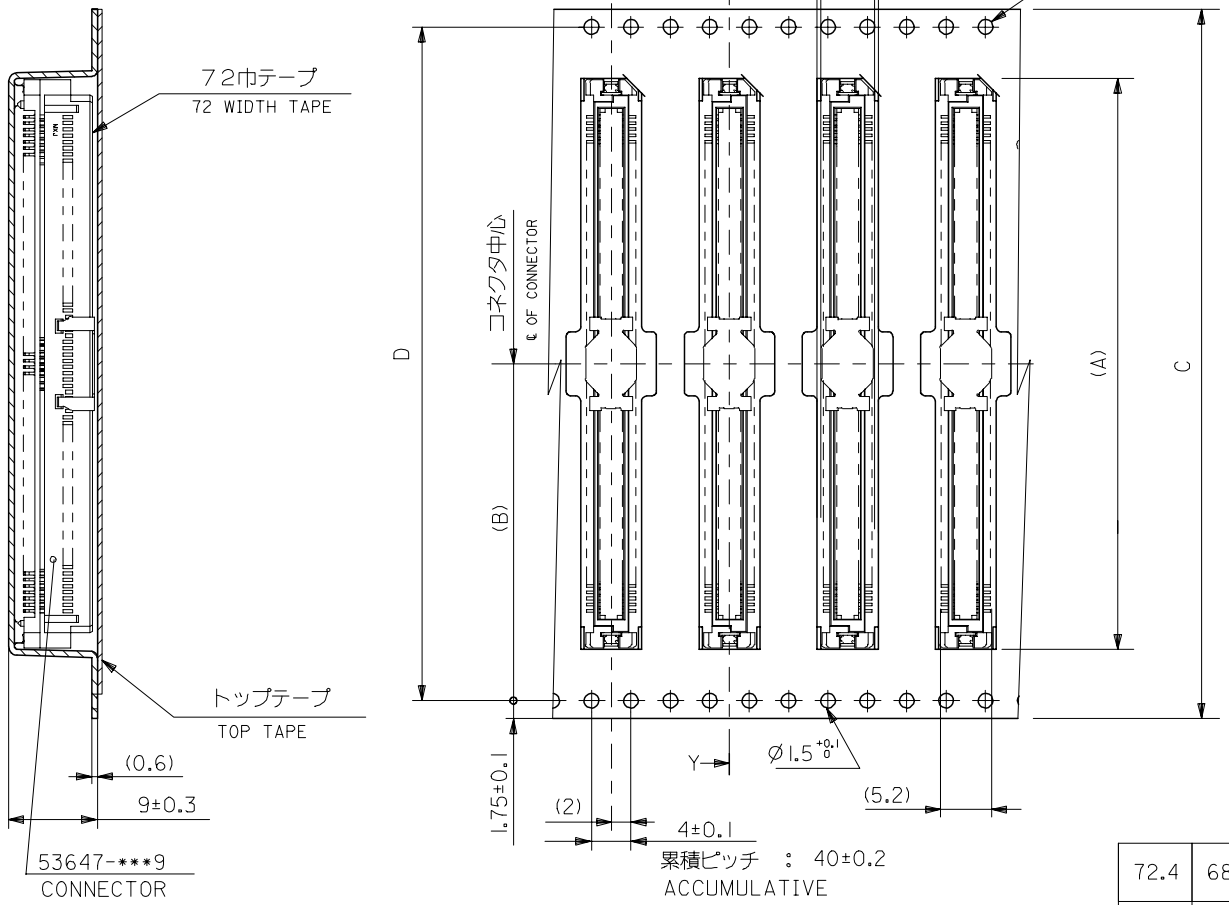

断面 Y−Y
SECTION Y-Y

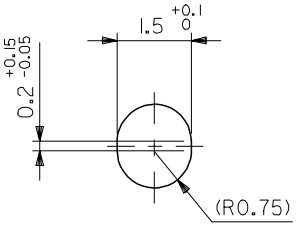

Z部詳細

72.4	68.4	72 ±0.3	34.2	51.6	53647-1474	140
			34.2	45.3	53647-1274	120
E	D	C キャリアテープ幅 CARRIER TAPE WIDTH	(B)	(A)	MATERIAL NO.	極数 NO. OF CKTS.

MODEL NO. 53647-**74

THIRD ANGLE PROJECTION

REVISED
EC NO: J2006-1852 2005/12/02
DRWN:MNABEI 2005/12/05
CHKD:KTOYODA
APPR:NUKITA 2005/12/14

REV C

DESCRIPTION

GENERAL TOLERANCES (UNLESS SPECIFIED)

10 UNDER	±---
10 OVER 30 UNDER	±---
30 OVER	±---
ANGULAR	±--- °

DRAFT WHERE APPLICABLE MUST REMAIN WITHIN DIMENSIONS

DIMENSION STYLE: MM ONLY
SCALE: ---
DESIGN UNITS: METRIC

DRAWN BY: Y.WADA DATE: '04/03/01
CHECKED BY: M.SASAO DATE: '04/03/01
APPROVED BY: M.SASAO DATE: '04/03/01

TITLE
53647-***9
TAPING PACKAGE
-LEAD FREE-

molex MOLEX INCORPORATED

MATERIAL NO. SEE CHART
DOCUMENT NO. SD-53647-003
SHEET NO. 3 OF 3

SIZE A3

THIS DRAWING CONTAINS INFORMATION THAT IS PROPRIETARY TO MOLEX INCORPORATED AND SHOULD NOT BE USED WITHOUT WRITTEN PERMISSION