Motion SPM® 3 Series

Product Preview

FNB35060T6S

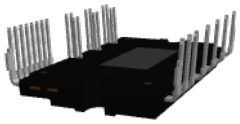

3D Package Drawing
(Click to Activate 3D Content)

SPMQA−027
CASE MODDZ

Description

FNB35060T6S is an advanced Motion SPM 3 module providing a fully−featured, high−performance inverter output stage for AC Induction, BLDC, and PMSM motors. These modules integrate optimized gate drive of the built−in IGBTs to minimize EMI and losses, while also providing multiple on−module protection features including under−voltage lockouts, over−current shutdown, thermal monitoring of drive IC, and fault reporting. The built−in, high−speed HVIC requires only a single supply voltage and translates the incoming logic−level gate inputs to the high−voltage, high−current drive signals required to properly drive the module's internal IGBTs. Separate negative IGBT terminals are available for each phase to support the widest variety of control algorithms.

Features

- 600 V − 50 A 3−Phase IGBT Inverter with Integral Gate Drivers and Protection
- Low−Loss, Short−Circuit Rated IGBTs
- Very Low Thermal Resistance using AlN DBC Substrate
- Built−In Bootstrap Diodes and Dedicated Vs Pins Simplify PCB Layout
- Separate Open−Emitter Pins from Low−Side IGBTs for Three−Phase Current Sensing
- Single−Grounded Power Supply
- LVIC Temperature−Sensing Built−In for Temperature Monitoring
- Isolation Rating: 2500 V_{rms} / 1 min.
- These Device is Halogen Free and is RoHS Compliant

Applications

- Motion Control − Home Appliance / Industrial Motor

Related Resources

- AN−9088 − Motion SPM 3 V6 Series Users Guide
- AN−9086 − SPM 3 Package Mounting Guide

This document contains information on a product under development. **onsemi** reserves the right to change or discontinue this product without notice.

MARKING DIAGRAM

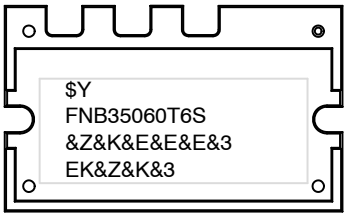

$Y	= **onsemi** Logo
&Z	= Assembly Plant Code
&3	= Data Code (Year & Week)
&K	= Lot
FNB35060T6S	= Specific Device Code

ORDERING INFORMATION

See detailed ordering and shipping information on page 13 of this data sheet.

© Semiconductor Components Industries, LLC, 2021

Integrated Power Functions

- 600 V − 50 A IGBT inverter for three−phase DC / AC power conversion (Please refer to Figure 2)

Integrated Drive, Protection and System Control Functions

- For Inverter High−Side IGBTs:
  gate drive circuit, high−voltage isolated high−speed level shifting control circuit Under−Voltage Lock−Out Protection (UVLO)

NOTE: Available bootstrap circuit example is given in Figures 4 and 14

- For Inverter Low−side IGBTs:
  gate drive circuit, Short−Circuit Protection (SCP) control supply circuit Under−Voltage Lock−Out Protection (UVLO)
- Fault Signaling:
  corresponding to UVLO (low−side supply) and SC faults
- Input Interface:
  active−HIGH interface, works with 3.3 / 5 V logic, Schmitt−trigger input

PIN CONFIGURATION

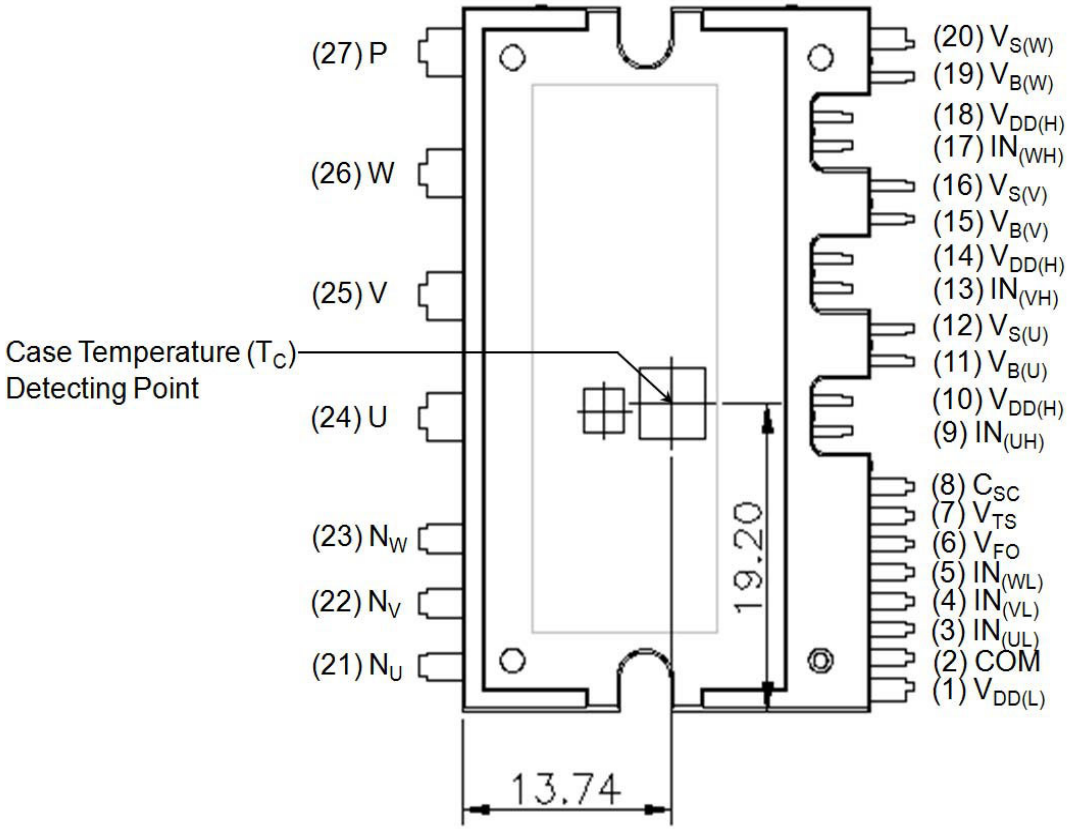

Figure 1. Top View

PIN DESCRIPTIONS

Pin No.	Pin Name	Pin Description
1	$V_{DD(L)}$	Low−Side Common Bias Voltage for IC and IGBTs Driving
2	COM	Common Supply Ground
3	$IN_{(UL)}$	Signal Input for Low−Side U−Phase
4	$IN_{(VL)}$	Signal Input for Low−Side V−Phase
5	$IN_{(WL)}$	Signal Input for Low−Side W−Phase
6	V_{FO}	Fault Output
7	V_{TS}	Output for LVIC Temperature Sensing Voltage Output
8	C_{SC}	Shut Down Input for Short−Circuit Current Detection Input
9	$IN_{(UH)}$	Signal Input for High−Side U−Phase
10	$V_{DD(H)}$	High−Side Common Bias Voltage for IC and IGBTs Driving
11	$V_{B(U)}$	High−Side Bias Voltage for U−Phase IGBT Driving
12	$V_{S(U)}$	High−Side Bias Voltage Ground for U−Phase IGBT Driving
13	$IN_{(VH)}$	Signal Input for High−Side V−Phase
14	$V_{DD(H)}$	High−Side Common Bias Voltage for IC and IGBTs Driving
15	$V_{B(V)}$	High−Side Bias Voltage for V−Phase IGBT Driving
16	$V_{S(V)}$	High−Side Bias Voltage Ground for V Phase IGBT Driving
17	$IN_{(WH)}$	Signal Input for High−Side W−Phase
18	$V_{DD(H)}$	High−Side Common Bias Voltage for IC and IGBTs Driving
19	$V_{B(W)}$	High−Side Bias Voltage for W−Phase IGBT Driving
20	$V_{S(W)}$	High−Side Bias Voltage Ground for W−Phase IGBT Driving
21	N_U	Negative DC−Link Input for U−Phase
22	N_V	Negative DC−Link Input for V−Phase
23	N_W	Negative DC−Link Input for W−Phase
24	U	Output for U−Phase
25	V	Output for V−Phase
26	W	Output for W−Phase
27	P	Positive DC−Link Input

INTERNAL EQUIVALENT CIRCUIT AND INPUT/OUTPUT PINS

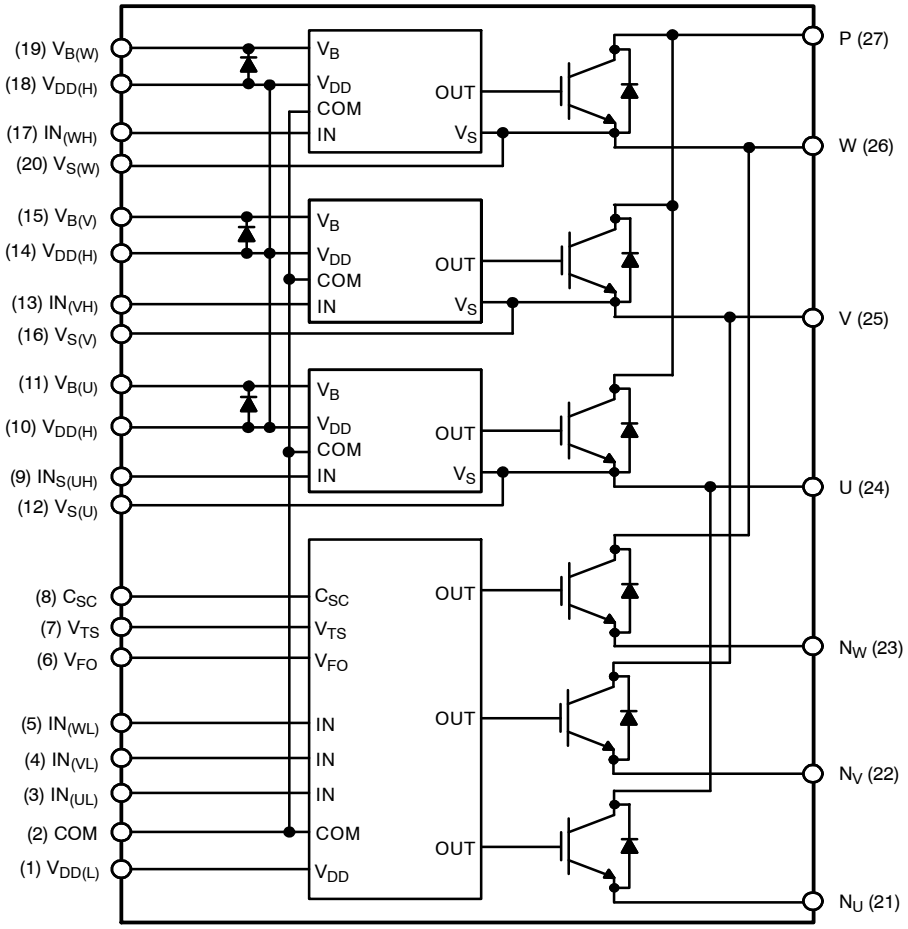

Figure 2. Internal Block Diagram

1. Inverter low−side is composed of three IGBTs, freewheeling diodes for each IGBT, and one control IC. It has gate drive and protection functions.
2. Inverter power side is composed of four inverter DC−link input terminals and three inverter output terminals.
3. Inverter high−side is composed of three IGBTs, freewheeling diodes, and three drive ICs for each IGBT.

ABSOLUTE MAXIMUM RATINGS (T_J = 25°C, Unless Otherwise Specified)

Symbol	Parameter	Conditions	Rating	Unit
INVERTER PART				
V_{PN}	Supply Voltage	Applied between P – N_U, N_V, N_W	450	V
$VP_{N(Surge)}$	Supply Voltage (Surge)	Applied between P – N_U, N_V, N_W	500	V
V_{CES}	Collector – Emitter Voltage		600	V
± I_C	Each IGBT Collector Current	T_C = 25°C, $T_J \le$ 150°C (Note 4)	50	A
± I_{CP}	Each IGBT Collector Current (Peak)	T_C = 25°C, $T_J \le$ 150°C, Under 1 ms Pulse Width (Note 4)	100	A
P_C	Collector Dissipation	T_C = 25°C per One Chip (Note 4)	367	W
T_J	Operating Junction Temperature		–40~150	°C
CONTROL PART				
V_{DD}	Control Supply Voltage	Applied between $V_{DD(H)}$, $V_{DD(L)}$ – COM	20	V
V_{BS}	High–Side Control Bias Voltage	Applied between $V_{B(U)} - V_{S(U)}$, $V_{B(V)} - V_{S(V)}$, $V_{B(W)} - V_{S(W)}$	20	V
V_{IN}	Input Signal Voltage	Applied between $IN_{(UH)}$, $IN_{(VH)}$, $IN_{(WH)}$, $IN_{(UL)}$, $IN_{(VL)}$, $IN_{(WL)}$ – COM	–0.3~V_{DD}+0.3	V
V_{FO}	Fault Output Supply Voltage	Applied between V_{FO} – COM	–0.3~V_{DD}+0.3	V
I_{FO}	Fault Output Current	Sink Current at V_{FO} pin	2	mA
V_{SC}	Current Sensing Input Voltage	Applied between C_{SC} – COM	–0.3~V_{DD}+0.3	V
BOOTSTRAP DIODE PART				
V_{RRM}	Maximum Repetitive Reverse Voltage		600	V
I_F	Forward Current	T_C = 25°C, $T_J \le$ 150°C (Note 4)	0.5	A
I_{FP}	Forward Current (Peak)	T_C = 25°C, $T_J \le$ 150°C, Under 1 ms Pulse Width (Note 4)	2.0	A
T_J	Operating Junction Temperature		–40~150	°C
TOTAL SYSTEM				
$V_{PN(PROT)}$	Self Protection Supply Voltage Limit (Short Circuit Protection Capability)	V_{DD} = V_{BS} = 13.5~16.5 V, T_J = 150°C, Non–repetitive, < 2 μs	400	V
T_C	Module Case Operation Temperature	See Figure 1	–40~125	°C
T_{STG}	Storage Temperature		–40~125	°C
V_{ISO}	Isolation Voltage	60 Hz, Sinusoidal, AC 1 minute, Connection Pins to Heat Sink Plate	2500	V_{rms}

THERMAL RESISTANCE

Symbol	Parameter	Conditions	Min.	Typ.	Max.	Unit
$R_{th(j-c)Q}$	Junction to Case Thermal Resistance (Note 5)	Inverter IGBT part (per 1 / 6 module)	–	–	0.34	°C/W
$R_{th(j-c)F}$		Inverter FWD part (per 1 / 6 module)	–	–	0.93	°C/W

Stresses exceeding those listed in the Maximum Ratings table may damage the device. If any of these limits are exceeded, device functionality should not be assumed, damage may occur and reliability may be affected.

4. These values had been made an acquisition by the calculation considered to design factor.
5. For the measurement point of case temperature (T_C), *please refer to Figure 1.*

ELECTRICAL CHARACTERISTICS (T_J = 25°C, Unless Otherwise Specified)

Symbol		Parameter	Test Conditions		Min.	Typ.	Max.	Unit
INVERTER PART								
$V_{CE(SAT)}$		Collector – Emitter Saturation Voltage	V_{DD} = V_{BS} = 15 V V_{IN} = 5 V	I_C = 50 A, T_J = 25°C	–	1.65	2.25	V
V_F		FWDi Forward Voltage	V_{IN} = 0 V	I_F = 50 A, T_J = 25°C	–	1.90	2.50	V
HS	t_{ON}	Switching Times	V_{PN} = 300 V, V_{DD} = 15 V, I_C = 30 A, T_J = 25°C V_{IN} = 0 V ↔ 5 V, Inductive Load See Figure 4 (Note 6)		0.80	1.20	1.80	μs
	$t_{C(ON)}$				–	0.30	0.75	μs
	t_{OFF}				–	1.25	1.75	μs
	$t_{C(OFF)}$				–	0.15	0.50	μs
	t_{rr}				–	0.15	–	μs
LS	t_{ON}		V_{PN} = 300 V, V_{DD} = 15 V, I_C = 30 A, T_J = 25°C V_{IN} = 0 V ↔ 5 V, Inductive Load See Figure 4 (Note 6)		0.65	1.05	1.65	μs
	$t_{C(ON)}$				–	0.30	0.75	μs
	t_{OFF}				–	1.30	1.80	μs
	$t_{C(OFF)}$				–	0.25	0.60	μs
	t_{rr}				–	0.15	–	μs
I_{CES}		Collector – Emitter Leakage Current	V_{CE} = V_{CES}		–	–	5	mA

Product parametric performance is indicated in the Electrical Characteristics for the listed test conditions, unless otherwise noted. Product performance may not be indicated by the Electrical Characteristics if operated under different conditions.

6. t_{ON} and t_{OFF} include the propagation delay time of the internal drive IC. $t_{C(ON)}$ and $t_{C(OFF)}$ are the switching time of IGBT itself under the given gate driving condition internally. For the detailed information, *please see Figure 3*.

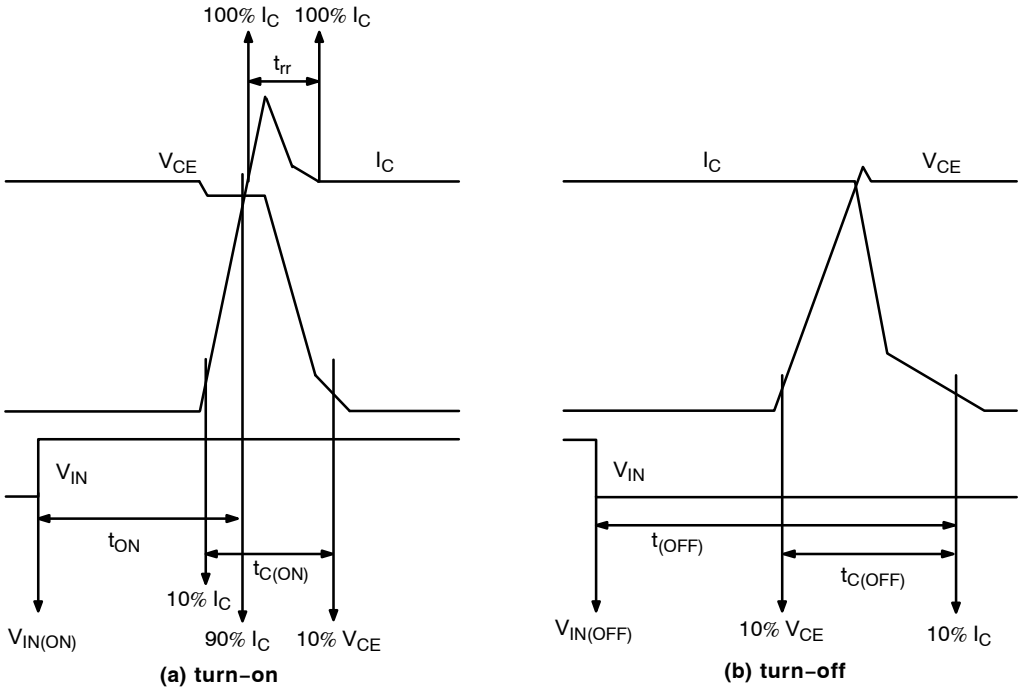

Figure 3. Switching Time Definition

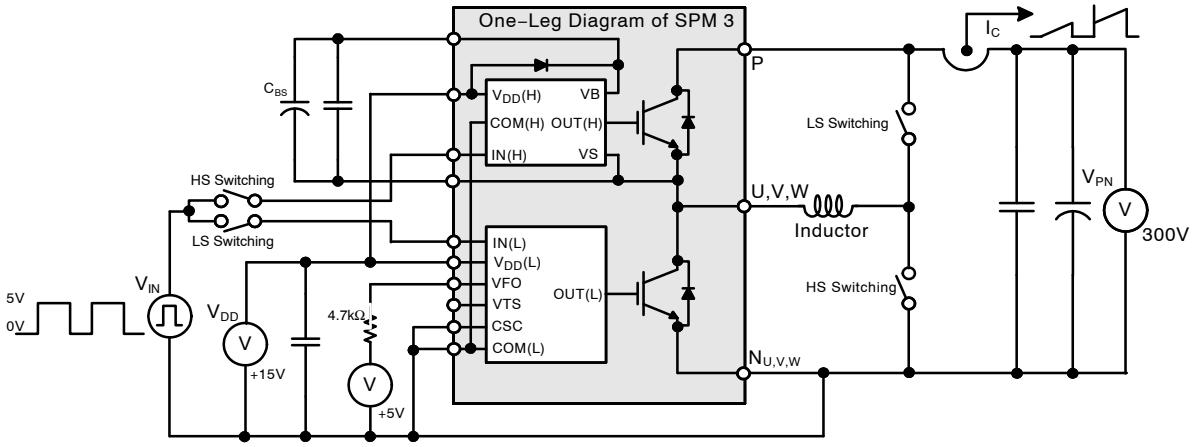

Figure 4. Example Circuit for Switching Test

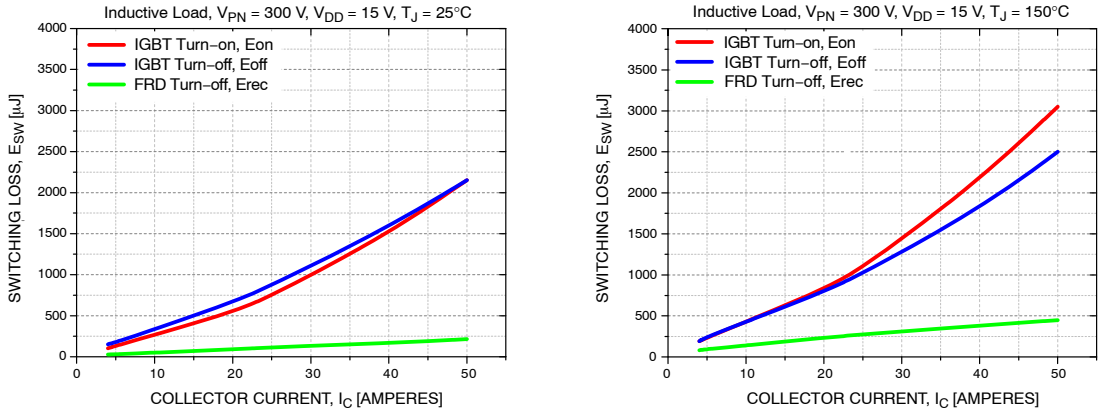

Figure 5. Switching Loss Characteristics

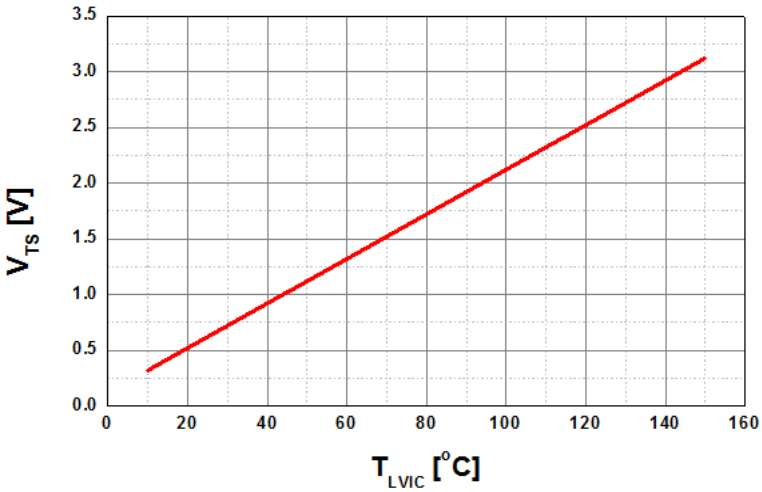

Figure 6. Temperature Profile of V_{TS} (Typical)

BOOTSTRAP DIODE PART

Symbol	Parameter	Conditions	Min.	Typ.	Max.	Unit
V_F	Forward Voltage	I_F = 0.1 A, T_J = 25°C	–	2.5	–	V
t_{rr}	Reverse Recovery Time	I_F = 0.1 A, dI_F / dt = 50 A / μs, T_J = 25°C	–	80	–	ns

CONTROL PART

Symbol	Parameter	Min	Conditions	Min.	Typ.	Max.	Unit
I_{QDDH}	Quiescent V_{DD} Supply Current	$V_{DD(H)}$ = 15 V, $IN_{(UH,VH,WH)}$ = 0 V	VDD(H) – COM	–	–	0.50	mA
I_{QDDL}		$V_{DD(L)}$ = 15 V, $IN_{(UL,VL,WL)}$ = 0 V	VDD(L) – COM	–	–	6.00	mA
I_{PDDH}	Operating V_{DD} Supply Current	$V_{DD(H)}$ = 15 V, f_{PWM} = 20 kHz, duty = 50%, applied to one PWM signal input for High–Side	$V_{DD(H)}$ – COM	–	–	0.60	mA
I_{PDDL}		$V_{DD(L)}$ = 15 V, f_{PWM} = 20 kHz, duty = 50%, applied to one PWM signal input for Low–Side	$V_{DD(L)}$ – COM	–	–	11.0	mA
I_{QBS}	Quiescent V_{BS} Supply Current	V_{BS} = 15 V, $IN_{(UH, VH, WH)}$ = 0 V	VB(U) – VS(U), VB(V) – VS(V), VB(W) – VS(W)	–	–	0.30	mA
I_{PBS}	Operating V_{BS} Supply Current	V_{DD} = V_{BS} = 15 V, f_{PWM} = 20 kHz, duty = 50%, applied to one PWM signal input for High–Side	VB(U) – VS(U), VB(V) – VS(V), VB(W) – VS(W)	–	–	5.50	mA
V_{FOH}	Fault Output Voltage	V_{DD} = 15 V, V_{SC} = 0 V, V_{FO} Circuit: 4.7 kΩ to 5 V Pull–up		4.5	–	–	V
V_{FOL}		V_{DD} = 15 V, V_{SC} = 1 V, V_{FO} Circuit: 4.7 kΩ to 5 V Pull–up		–	–	0.5	V
$V_{SC(ref)}$	Short Circuit Trip Level	V_{DD} = 15 V (Note 7)	C_{SC} – $COM_{(L)}$	0.45	0.50	0.55	V
UV_{DDD}	Supply Circuit Under – Voltage Protection	Detection Level		9.8	–	13.3	V
UV_{DDR}		Reset Level		10.3	–	13.8	V
UV_{BSD}		Detection Level		9.0	–	12.5	V
UV_{BSR}		Reset Level		9.5	–	13.0	V
t_{FOD}	Fault–Out Pulse Width			50	–	–	μs
V_{TS}	LVIC Temperature Sensing Voltage Output	$V_{DD(L)}$ = 15 V, T_{LVIC} = 25°C (Note 8) See Figure 6		540	640	740	mV
$V_{IN(ON)}$	ON Threshold Voltage	Applied between $IN_{(UH, VH, WH)}$ – COM, $IN_{(UL, VL, WL)}$ – COM		–	–	2.6	V
$V_{IN(OFF)}$	OFF Threshold Voltage			0.8	–	–	V

7. Short–circuit current protection is functioning only at the low–sides.
8. T_{LVIC} is the temperature of LVIC itself. V_{TS} is only for sensing temperature of LVIC and can not shutdown IGBTs automatically.

RECOMMENDED OPERATING CONDITIONS

Symbol	Parameter	Conditions	Min.	Typ.	Max.	Unit
V_{PN}	Supply Voltage	Applied between P – N_U, N_V, N_W	–	300	400	V
V_{DD}	Control Supply Voltage	Applied between $V_{DD(H)}$ – COM, $V_{DD(L)}$ – COM	14.0	15	16.5	V
V_{BS}	High−Side Bias Voltage	Applied between $V_{B(U)} - V_{S(U)}$, $V_{B(V)} - V_{S(V)}$, $V_{B(W)} - V_{S(W)}$	13.0	15	18.5	V
dV_{DD} / dt, dV_{BS} / dt	Control Supply Variation		– 1	–	1	V/μs
t_{dead}	Blanking Time for Preventing Arm – Short	For Each Input Signal	2.0	–	–	μs
f_{PWM}	PWM Input Signal	−40°C ≤ T_C ≤ 125°C, −40°C ≤ T_J ≤ 150°C	–	–	20	kHz
V_{SEN}	Voltage for Current Sensing	Applied between N_U, N_V, N_W – COM (Including Surge Voltage)	−5		5	V
$PW_{IN(ON)}$	Minimum Input Pulse Width	V_{DD} = V_{BS} = 15 V, I_C ≤ 100 A, Wiring Inductance between $N_{U, V, W}$ and DC Link N < 10 nH (Note 9)	2.5	–	–	μs
$PW_{IN(OFF)}$			2.5	–	–	μs
T_J	Junction Temperature		−40	–	150	°C

Functional operation above the stresses listed in the Recommended Operating Ranges is not implied. Extended exposure to stresses beyond the Recommended Operating Ranges limits may affect device reliability.

9. This product might not make response if input pulse width is less than the recommended value.

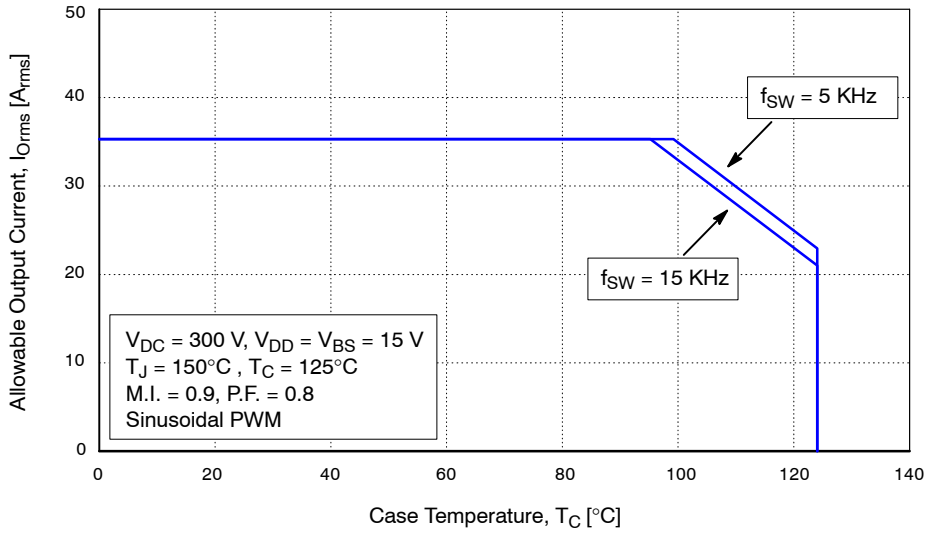

Figure 7. Allowable Maximum Output Current

10. This allowable output current value is the reference data for the safe operation of this product. This may be different from the actual application and operating condition.

MECHANICAL CHARACTERISTISC AND RATINGS

Parameter	Conditions		Limits			Unit
			Min.	Typ.	Max.	
Device Flatness	See Figure 8		0	–	+150	μm
Mounting Torque	Mounting Screw: M3 See Figure 9	Recommended 0.7 N/m	0.6	0.7	0.8	N/m
		Recommended 7.1 kg/cm	6.2	7.1	8.1	kg/cm
Terminal Pulling Strength	Load 19.6 N		10	–	–	s
Terminal Bending Strength	Load 9.8 N, 90 deg. bend		2	–	–	times
Weight			–	15	–	g

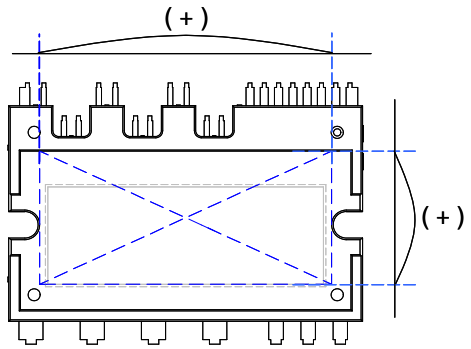

Figure 8. Flatness Measurement Position

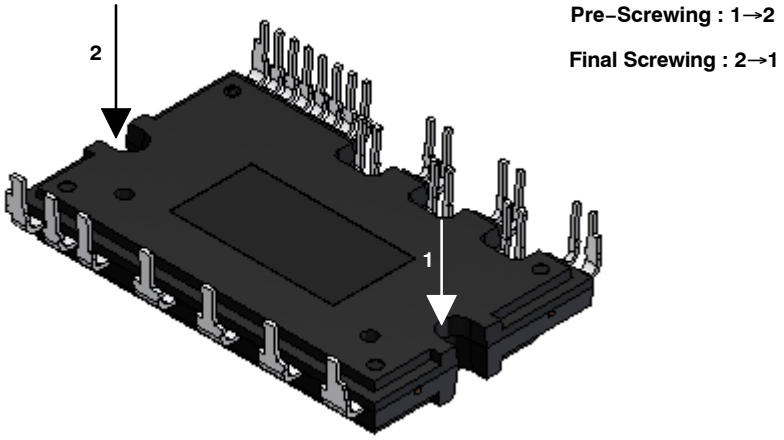

Figure 9. Mounting Screws Torque Order

11. Do not make over torque when mounting screws. Much mounting torque may cause DBC cracks, as well as bolts and Al heat−sink destruction.
12. Avoid one−sided tightening stress. Figure 9 shows the recommended torque order for mounting screws. Uneven mounting can cause the DBC substrate of package to be damaged. The pre−screwing torque is set to 20 ~ 30% of maximum torque rating.

Time Charts of SPMs Protective Function

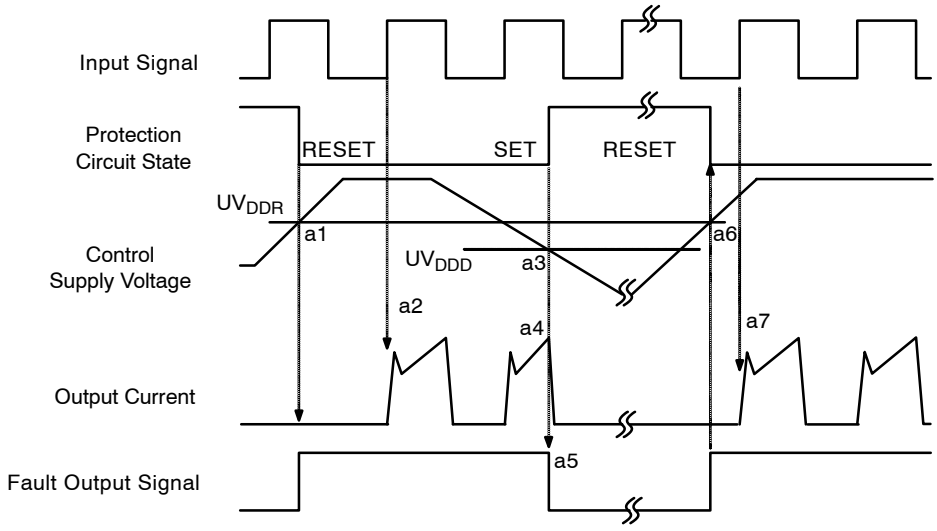

Figure 10. Under−Voltage Protection (Low−Side)

a1 : Control supply voltage rises: After the voltage rises UV_{DDR}, the circuits start to operate when next input is applied.
a2 : Normal operation: IGBT ON and carrying current.
a3 : Under voltage detection (UV_{DDD}).
a4 : IGBT OFF in spite of control input condition.
a5 : Fault output operation starts with a fixed pulse width.
a6 : Under voltage reset (UV_{DDR}).
a7 : Normal operation: IGBT ON and carrying current by triggering next signal from LOW to HIGH.

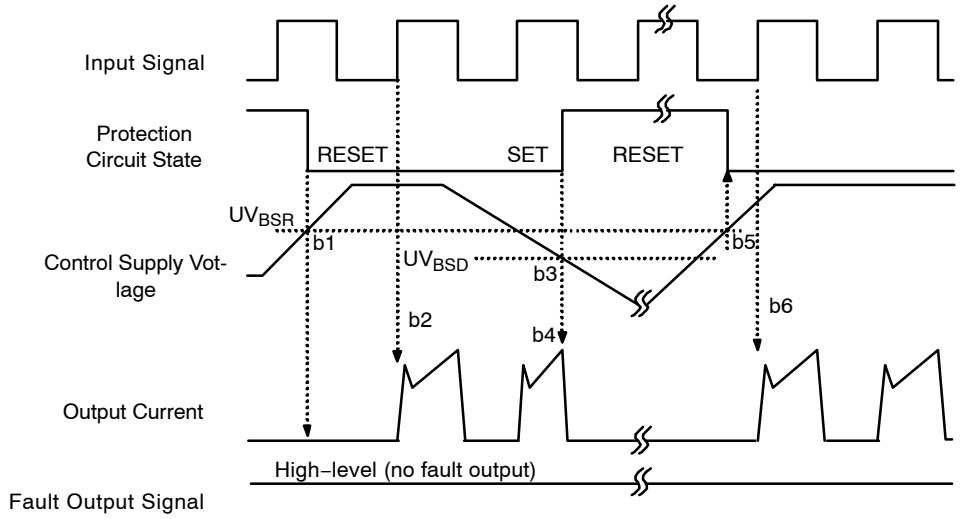

Figure 11. Under−Voltage Protection (High−Side)

b1 : Control supply voltage rises: After the voltage reaches UV_{BSR}, the circuits start to operate when next input is applied.
b2 : Normal operation: IGBT ON and carrying current.
b3 : Under voltage detection (UV_{BSD}).
b4 : IGBT OFF in spite of control input condition, but there is no fault output signal.
b5 : Under voltage reset (UV_{BSR}).
b6 : Normal operation: IGBT ON and carrying current by triggering next signal from LOW to HIGH.

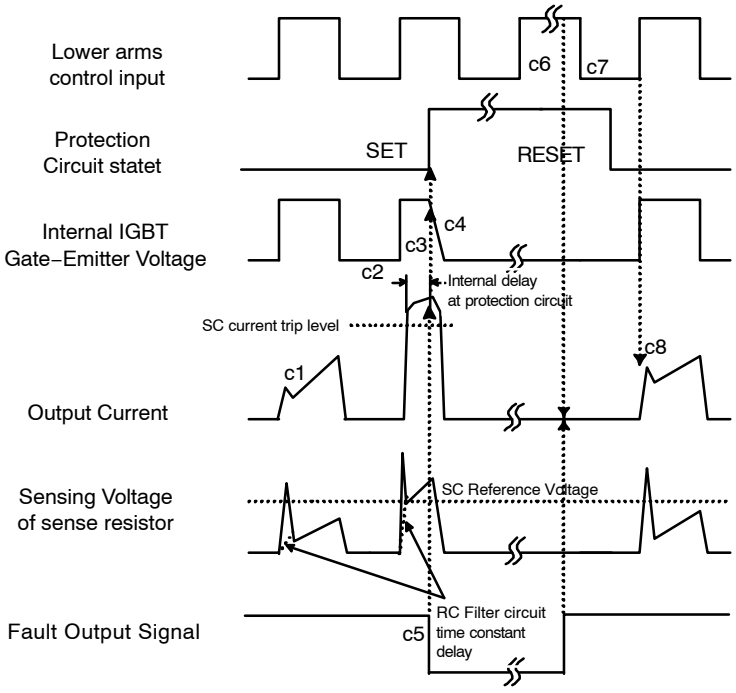

Figure 12. Short−Circuit Current Protection (Low−Side Operation only)

(with the external sense resistance and RC filter connection)
c1 : Normal operation: IGBT ON and carrying current.
c2 : Short circuit current detection (SC trigger).
c3 : All low−side IGBT's gate are hard interrupted.
c4 : All low−side IGBTs turn OFF.
c5 : Fault output operation starts with a fixed pulse width.
c6 : Input HIGH: IGBT ON state, but during the active period of fault output the IGBT doesn't turn ON.
c7 : Fault output operation finishes, but IGBT doesn't turn on until triggering next signal from LOW to HIGH.
c8 : Normal operation: IGBT ON and carrying current.

Input/Output Interface Circuit

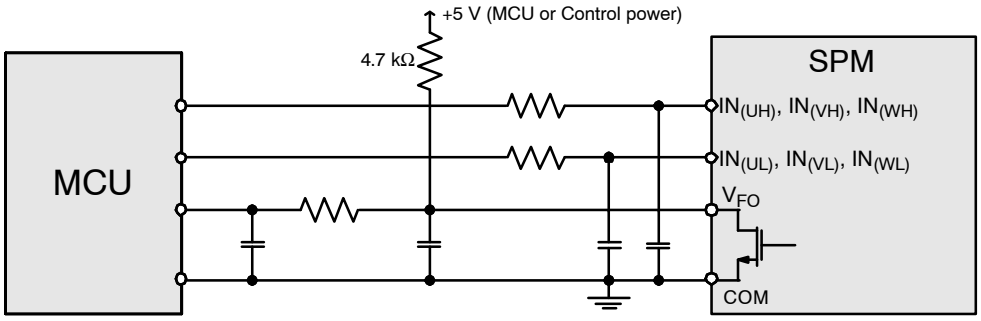

Figure 13. Recommended CPU I/O Interface Circuit

13. RC coupling at each input might change depending on the PWM control scheme used in the application and the wiring impedance of the application's printed circuit board. The input signal section of the Motion SPM 3 product integrates 5 kΩ (typ.) pull−down resistor. Therefore, when using an external filtering resistor, please pay attention to the signal voltage drop at input terminal.

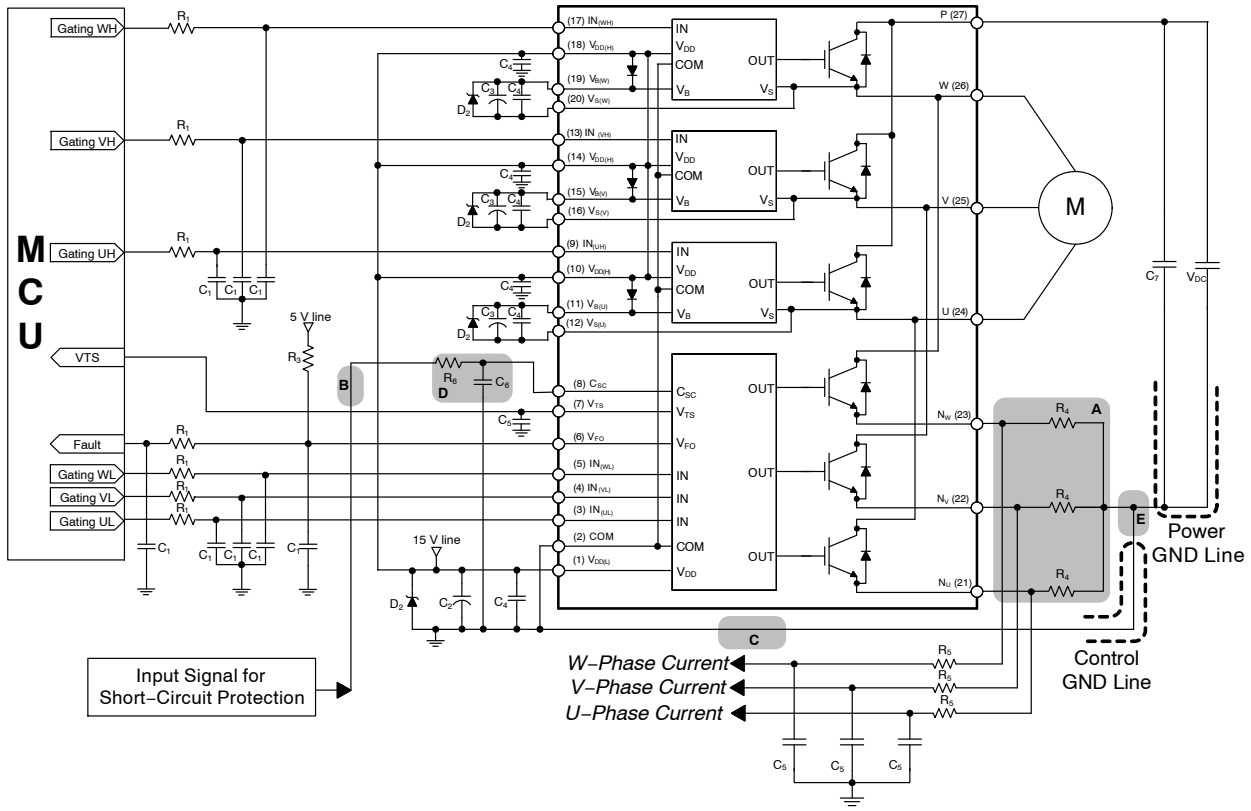

Figure 14. Typical Application Circuit

14. To avoid malfunction, the wiring of each input should be as short as possible. (less than 2−3 cm)
15. V_{FO} output is open−drain type. This signal line should be pulled up to the positive side of the MCU or control power supply with a resistor that makes I_{FO} up to 2 mA. Please refer to Figure 13.
16. Input signal is active−HIGH type. There is a 5 kΩ resistor inside the IC to pull−down each input signal line to GND. RC coupling circuits should be adopted for the prevention of input signal oscillation. R_1C_1 time constant should be selected in the range 50 ~ 150 ns. (Recommended R_1 = 100 Ω, C_1 = 1 nF)
17. Each wiring pattern inductance of A point should be minimized (Recommend less than 10 nH). Use the shunt resistor R_4 of surface mounted (SMD) type to reduce wiring inductance. To prevent malfunction, wiring of point E should be connected to the terminal of the shunt resistor R_4 as close as possible.
18. To prevent errors of the protection function, the wiring of B, C, and D point should be as short as possible.
19. In the short−circuit protection circuit, please select the R_6C_6 time constant in the range 1.5 ~ 2 μs. Do enough evaluaiton on the real system because short−circuit protection time may vary wiring pattern layout and value of the R_6C_6 time constant.
20. Each capacitor should be mounted as close to the pins of the Motion SPM 3 product as possible.
21. To prevent surge destruction, the wiring between the smoothing capacitor C_7 and the P & GND pins should be as short as possible. The use of a high−frequency non−inductive capacitor of around 0.1 ~ 0.22 μF between the P & GND pins is recommended.
22. Relays are used at almost every systems of electrical equipments at industrial application. In these cases, there should be sufficient distance between the CPU and the relays.
23. The zener diode or transient voltage suppressor should be adopted for the protection of ICs from the surge destruction between each pair of control supply terminals (Recommanded zener diode is 22 V / 1 W, which has the lower zener impedance characteristic than about 15 Ω).
24. C_2 of around 7 times larger than bootstrap capacitor C_3 is recommended.
25. Please choose the electrolytic capacitor with good temperature characteristic in C_3. Also, choose 0.1 ~ 0.2 μF R−category ceramic capacitors with good temperature and frequency characteristics in C_4.

PACKAGE MARKING AND ORDERING INFORMATION

Device	Device Marking	Package	Packing	Quantity
FNB35060T6S	FNB35060T6S	SPMQA−027	Rail	10

SPM is registered trademark of Semiconductor Components Industries, LLC dba “**onsemi**” or its affiliates and/or subsidiaries in the United States and/or other countries.

SPMQA−027 / 27LD, PDD STD, DBC DOUBLE DIP TYPE
CASE MODDZ
ISSUE O

DATE 31 DEC 2016

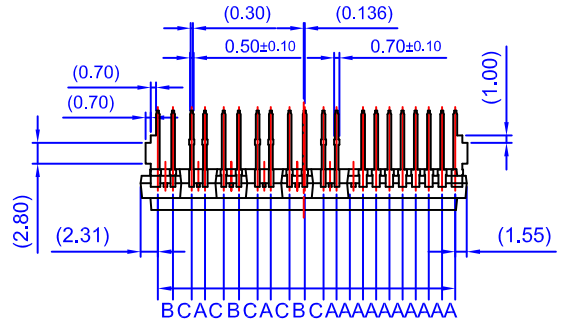

LEAD PITCH (TOLERANCE : ±0.30)
A : 1.778
B : 2.050
C : 2.531

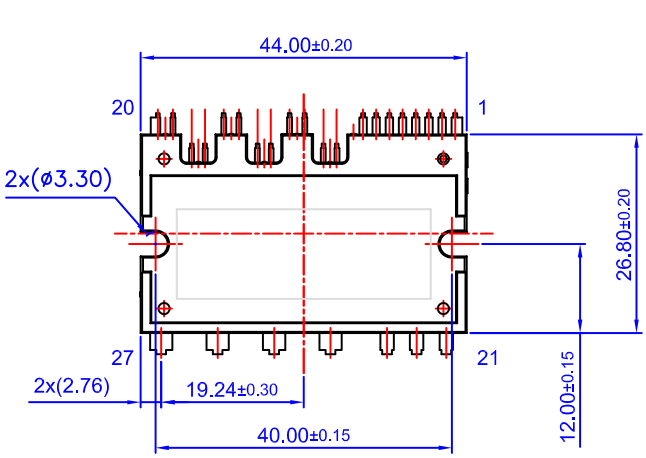

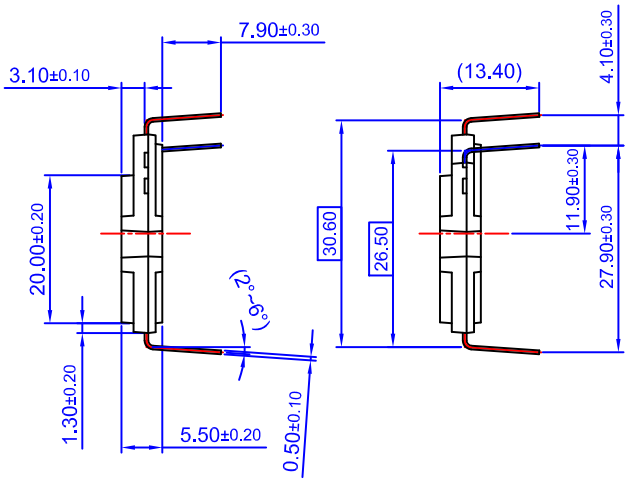

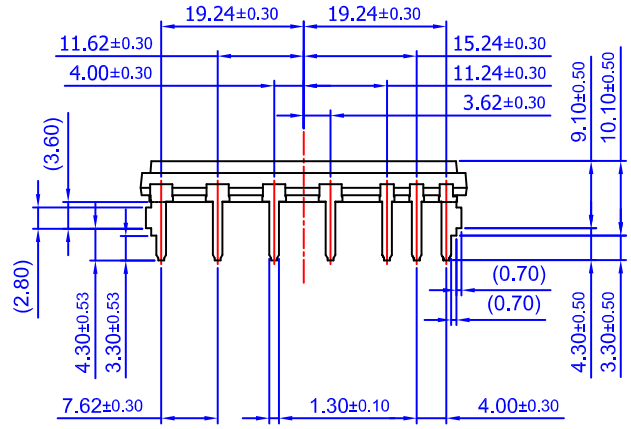

NOTES: UNLESS OTHERWISE SPECIFIED
A) THIS PACKAGE DOES NOT COMPLY TO ANY CURRENT PACKAGING STANDARD
B) ALL DIMENSIONS ARE IN MILLIMETERS.
C) DIMENSIONS ARE EXCLUSIVE OF BURRS, MOLD FLASH, AND TIE BAR EXTRUSIONS.
D) ( ) IS REFERENCE
E) [ ] IS ASS'Y QUALITY

DOCUMENT NUMBER:	**98AON13589G**	Electronic versions are uncontrolled except when accessed directly from the Document Repository. Printed versions are uncontrolled except when stamped "CONTROLLED COPY" in red.	
DESCRIPTION:	**SPMQA−027 / 27LD, PDD STD, DBC DOUBLE DIP TYPE**		**PAGE 1 OF 1**

onsemi and onsemi are trademarks of Semiconductor Components Industries, LLC dba **onsemi** or its subsidiaries in the United States and/or other countries. **onsemi** reserves the right to make changes without further notice to any products herein. **onsemi** makes no warranty, representation or guarantee regarding the suitability of its products for any particular purpose, nor does **onsemi** assume any liability arising out of the application or use of any product or circuit, and specifically disclaims any and all liability, including without limitation special, consequential or incidental damages. **onsemi** does not convey any license under its patent rights nor the rights of others.

onsemi, , and other names, marks, and brands are registered and/or common law trademarks of Semiconductor Components Industries, LLC dba "**onsemi**" or its affiliates and/or subsidiaries in the United States and/or other countries. **onsemi** owns the rights to a number of patents, trademarks, copyrights, trade secrets, and other intellectual property. A listing of **onsemi**'s product/patent coverage may be accessed at www.onsemi.com/site/pdf/Patent−Marking.pdf. **onsemi** reserves the right to make changes at any time to any products or information herein, without notice. The information herein is provided "as−is" and **onsemi** makes no warranty, representation or guarantee regarding the accuracy of the information, product features, availability, functionality, or suitability of its products for any particular purpose, nor does **onsemi** assume any liability arising out of the application or use of any product or circuit, and specifically disclaims any and all liability, including without limitation special, consequential or incidental damages. Buyer is responsible for its products and applications using **onsemi** products, including compliance with all laws, regulations and safety requirements or standards, regardless of any support or applications information provided by **onsemi**. "Typical" parameters which may be provided in **onsemi** data sheets and/or specifications can and do vary in different applications and actual performance may vary over time. All operating parameters, including "Typicals" must be validated for each customer application by customer's technical experts. **onsemi** does not convey any license under any of its intellectual property rights nor the rights of others. **onsemi** products are not designed, intended, or authorized for use as a critical component in life support systems or any FDA Class 3 medical devices or medical devices with a same or similar classification in a foreign jurisdiction or any devices intended for implantation in the human body. Should Buyer purchase or use **onsemi** products for any such unintended or unauthorized application, Buyer shall indemnify and hold **onsemi** and its officers, employees, subsidiaries, affiliates, and distributors harmless against all claims, costs, damages, and expenses, and reasonable attorney fees arising out of, directly or indirectly, any claim of personal injury or death associated with such unintended or unauthorized use, even if such claim alleges that **onsemi** was negligent regarding the design or manufacture of the part. **onsemi** is an Equal Opportunity/Affirmative Action Employer. This literature is subject to all applicable copyright laws and is not for resale in any manner.

ADDITIONAL INFORMATION

TECHNICAL PUBLICATIONS:
Technical Library: www.onsemi.com/design/resources/technical−documentation
onsemi Website: www.onsemi.com

ONLINE SUPPORT: www.onsemi.com/support
For additional information, please contact your local Sales Representative at www.onsemi.com/support/sales