PROGRAMMABLE PRECISION REFERENCES

The TL431 is three-terminal adjustable shunt regulator with specified termal stability.
The output voltage may be set to any value between V_{REF} (Approx. 2.5V) and 36V with two external resistors.
This device has a typical output inpedance of 0.2Ω.
Active output circuitry provides a very sharp turn-on characteristic, making this device excellent replacement for zener diodes in many application.

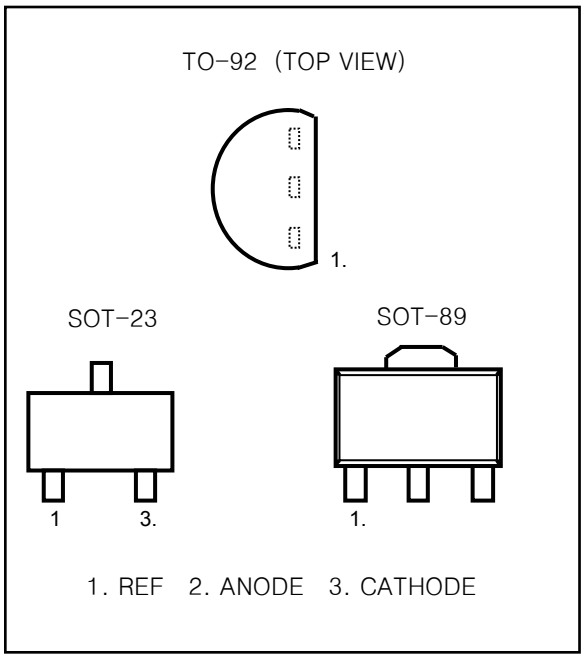

FEATURES

- Equivalent Full Range Temperature Coefficient 50PPM/℃
- Temperature Compensated For Operation Over Full Rate Operating Temperature Range
- Adjustable Output Voltage
- Fast Turn-on Response
- Sink Current Capability 1㎃ to 100㎃
- Low (0.2Ω Typ.) Dynamic Output Impedance
- Low Output Noise

FUNCTION BLOCK DIAGRAM

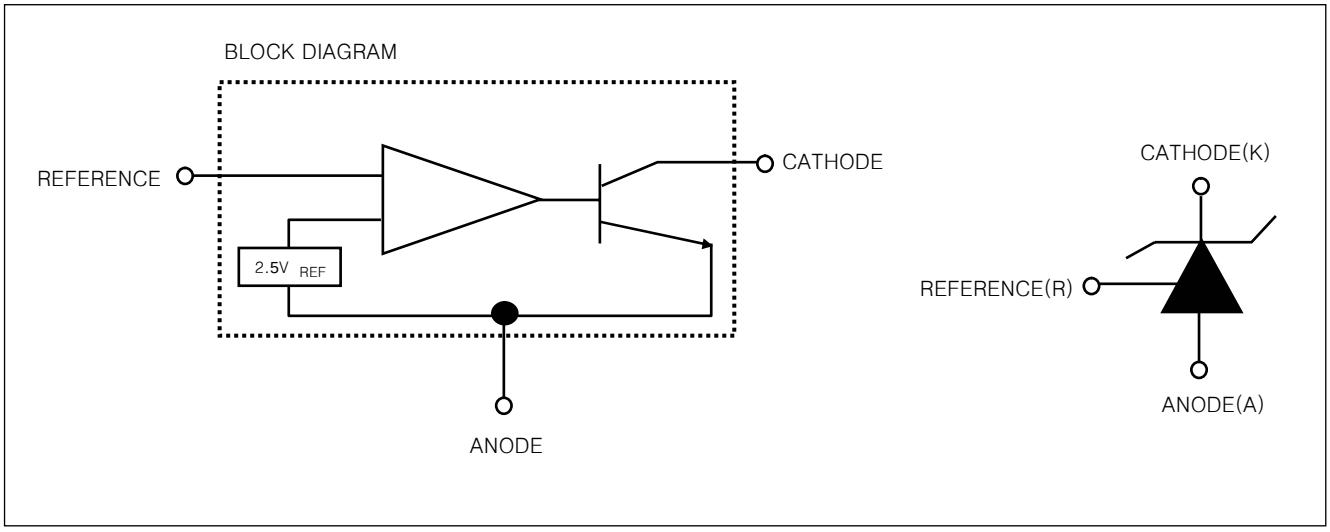

ABSOLUTE MAXIMUM RATINGS

(Full Operating Ambient Temperature Range Applies Unless Otherwise Noted)

CHARACTERISTIC	SYMBOL	RATING	UNIT
Cathode Voltage	V_{KA}	37	V
Continuous Cathode Current Range	I_{KA}	-100~+150	mA
Reference Input Current Range	I_{REF}	0.05~10	mA
Junction Temperature	T_J	150	℃
Operating Temperature	T_{OPR}	-20 ~ 85	℃
Storage Temperature	T_{STG}	-65 ~ 150	℃
Total Power Dissipation	P_D	700	mW

TL431-0.3% ELECTRICAL CHARACTERISTIC (T_A=25℃, unless otherwise specified)

CHARACTERISTIC	SYMBOL	CIR-CUIT	TEST CONDITION		MIN.	TYP.	MAX.	UNIT
Reference Input Voltage	V_{REF}	1	$V_{KA}=V_{REF}$, I_K=10mA		2.487V	2.495V	2.502V	
Deviation of Reference Input Voltage Over Full Temperature Range	$\Delta V_{REF}/\Delta T$	1	$V_{KA}=V_{REF}$, I_K=10mA T_A=Full Range			3	17	mV
Ratio of Change in Reference Input Voltage to the Change in Cathod Voltage	$\Delta V_{REF}/\Delta V_{KA}$	2	I_K=10mA	ΔV_{KA}=10V-V_{REF}		-1.4	-2.7	mV/V
				ΔV_{KA}=36V-10V		-1	-2	
Reference Input Current	I_{REF}	2	I_{KA}=10mA, R1=10kΩ, R2=∞			1.8	4	μA
Deviation of Reference Input Current Over Full Temperature Range	$\Delta I_{REF}/\Delta T$	2	I_K=10mA, R1=10kΩ, R2=∞ T_A=Full Range			0.4	1.2	μA
Minimum Cathode Current for Regulation	I_{KA}MIN	1	$\Delta V_{KA}=V_{REF}$			0.5	1	mA
Off-State Cathode Current	I_{KA}OFF	3	V_{KA}=36V, V_{REF}=0			0.2	1	μA
Dynamic Impedance	Z_{KA}	1	$V_{KA}=V_{REF}$, I_K=1mA~100mA, f≤1kHz			0.2	0.5	Ω

TL431-0.5%ELECTRICAL CHARACTERISTIC (T_A=25℃, unless otherwise specified)

CHARACTERISTIC	SYMBOL	CIR-CUIT	TEST CONDITION		MIN.	TYP.	MAX.	UNIT
Reference Input Voltage	V_{REF}	1	$V_{KA}=V_{REF}$, I_K=10mA		2.482V	2.495V	2.507V	
Deviation of Reference Input Voltage Over Full Temperature Range	$\Delta V_{REF}/\Delta T$	1	$V_{KA}=V_{REF}$, I_K=10mA T_A=Full Range			3	17	mV
Ratio of Change in Reference Input Voltage to the Change in Cathod Voltage	$\Delta V_{REF}/\Delta V_{KA}$	2	I_K=10mA	ΔV_{KA}=10V-V_{REF}		-1.4	-2.7	mV/V
				ΔV_{KA}=36V-10V		-1	-2	
Reference Input Current	I_{REF}	2	I_{KA}=10mA, R1=10kΩ, R2=∞			1.8	4	μA
Deviation of Reference Input Current Over Full Temperature Range	$\Delta I_{REF}/\Delta T$	2	I_K=10mA, R1=10kΩ, R2=∞ T_A=Full Range			0.4	1.2	μA
Minimum Cathode Current for Regulation	I_{KA}MIN	1	$\Delta V_{KA}=V_{REF}$			0.5	1	mA
Off-State Cathode Current	I_{KA}OFF	3	V_{KA}=36V, V_{REF}=0			0.2	1	μA
Dynamic Impedance	Z_{KA}	1	$V_{KA}=V_{REF}$, I_K=1mA~100mA, f≤1kHz			0.2	0.5	Ω

TL431-1%ELECTRICAL CHARACTERISTIC (T_A=25℃, unless otherwise specified)

CHARACTERISTIC	SYMBOL	CIR-CUIT	TEST CONDITION		MIN.	TYP.	MAX.	UNIT
Reference Input Voltage	V_{REF}	1	$V_{KA}=V_{REF}$, I_K=10mA		2.47V	2.495V	2.52V	
Deviation of Reference Input Voltage Over Full Temperature Range	$\Delta V_{REF}/\Delta T$	1	$V_{KA}=V_{REF}$, I_K=10mA T_A=Full Range			3	17	mV
Ratio of Change in Reference Input Voltage to the Change in Cathod Voltage	$\Delta V_{REF}/\Delta V_{KA}$	2	I_K=10mA	ΔV_{KA}=10V-V_{REF}		-1.4	-2.7	mV/V
				ΔV_{KA}=36V-10V		-1	-2	
Reference Input Current	I_{REF}	2	I_{KA}=10mA, R1=10kΩ, R2=∞			1.8	4	μA
Deviation of Reference Input Current Over Full Temperature Range	$\Delta I_{REF}/\Delta T$	2	I_K=10mA, R1=10kΩ, R2=∞ T_A=Full Range			0.4	1.2	μA
Minimum Cathode Current for Regulation	I_{KA}MIN	1	$\Delta V_{KA}=V_{REF}$			0.5	1	mA
Off-State Cathode Current	I_{KA}OFF	3	V_{KA}=36V, V_{REF}=0			0.2	1	μA
Dynamic Impedance	Z_{KA}	1	$V_{KA}=V_{REF}$, I_K=1mA~100mA, f≤1kHz			0.2	0.5	Ω

Fig. 1 Test Circuit for $V_{KA}=V_{REF}$

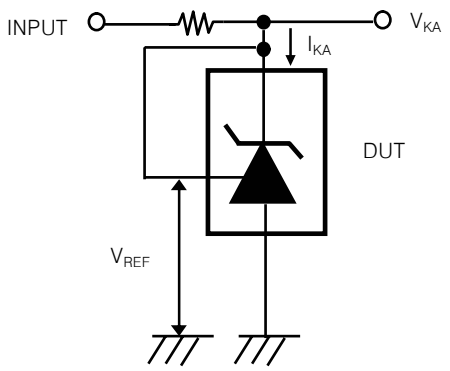

Fig. 2 Test Circuit for $V_{KA}\geq V_{REF}$

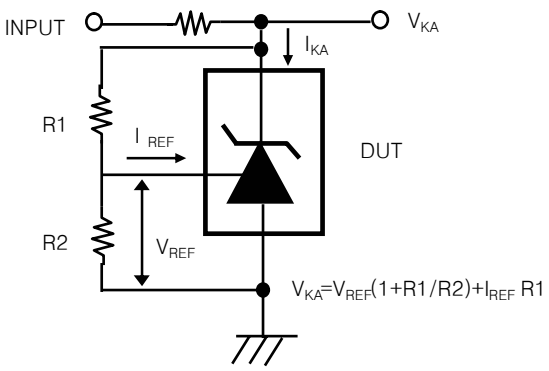

Fig. 3 Test Circuit for I_{KA} (off)

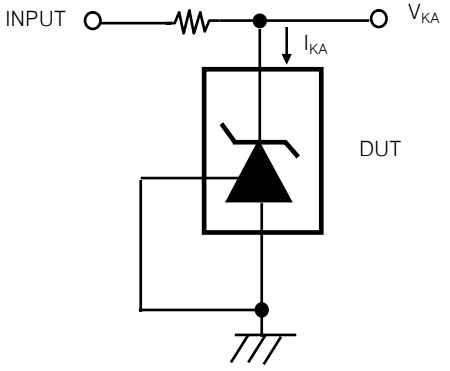

TYPICAL PERFORMANCE CHARACTERISTICS

REFERENCE VOLTAGE vs
FREE-AIR TEMPERATURE†

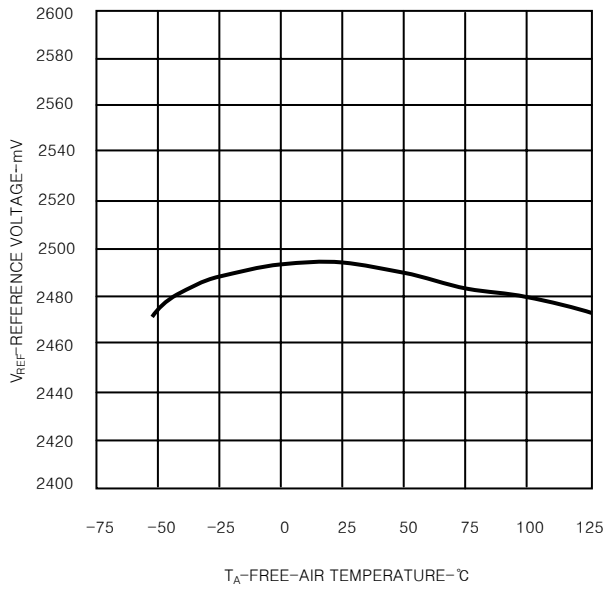

† Data is applicable only within the recommended operating free-air temperature ranges of the various devices.

‡ Data is for devices having the indicated value of V_{REF} at I_{KA}=10mA, T_A=25°C

Figure 4.

REFERENCE CURRENT vs
FREE-AIR TEMPERATURE †

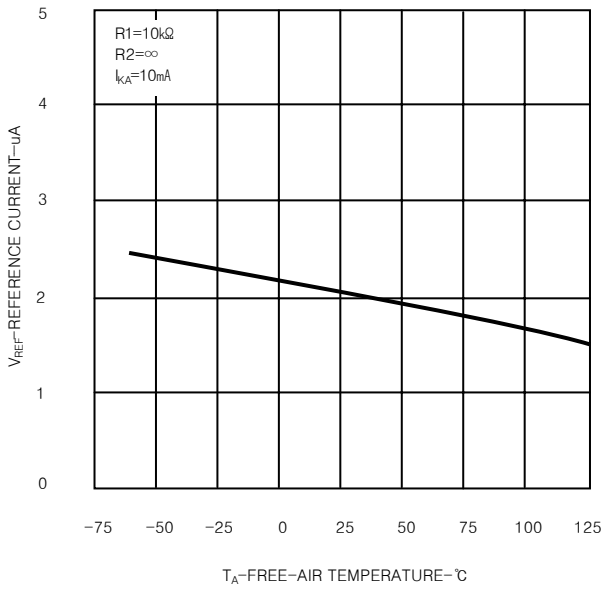

† Data is applicable only within the recommended operating free-air temperature ranges of the various devices.

Figure 5.

CATHODE CURRENT vs
CATHODE VOLTAGE

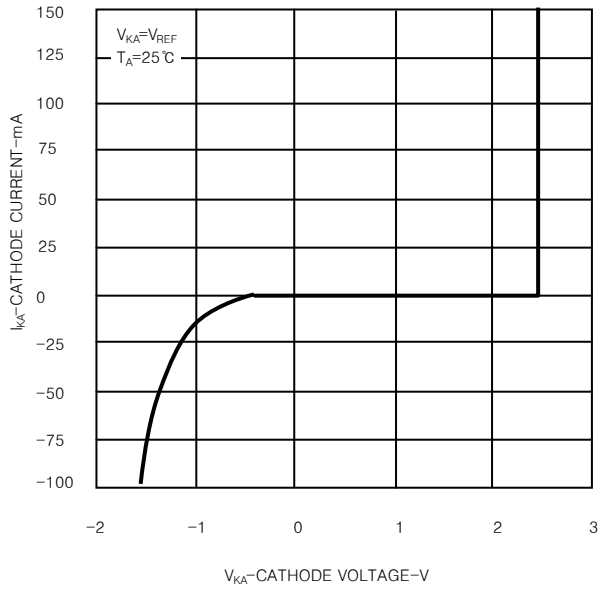

Figure 6.

CATHODE CURRENT vs
CATHODE VOLTAGE

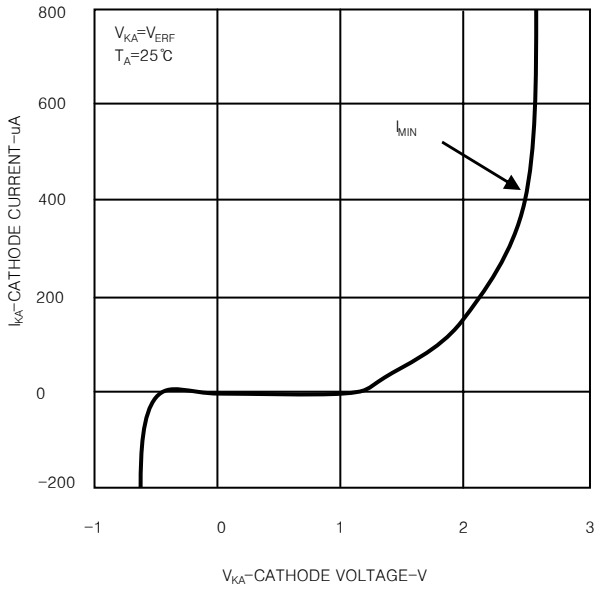

Figure 7.

TYPICAL PERFORMANCE CHARACTERISTICS

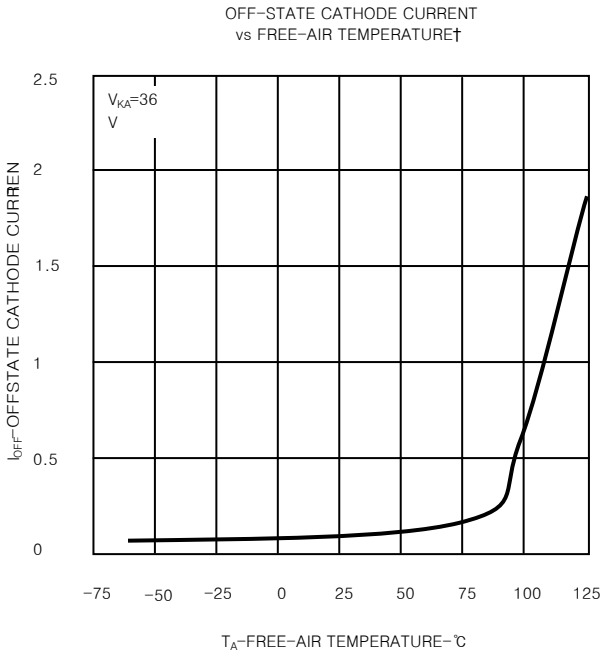

† Data is applicable only within the recommended operating free-air temperature ranges of the various devices.

Figure 8.

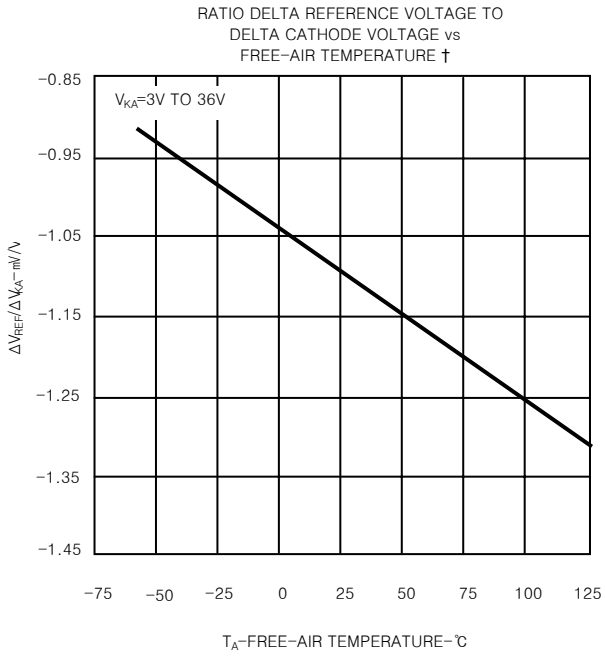

† Data is applicable only within the recommended operating free-air temperature ranges of the various devices.

Figure 9.

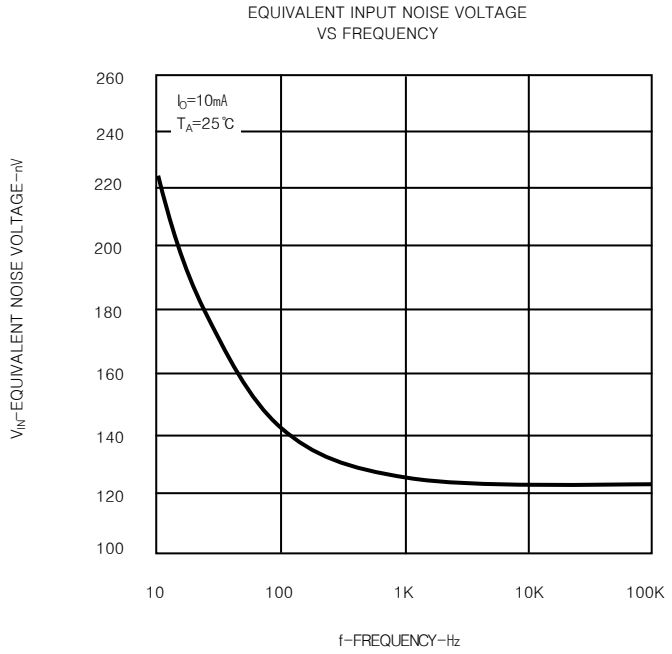

Figure 10.

TYPICAL PERFORMANCE CHARACTERISTICS

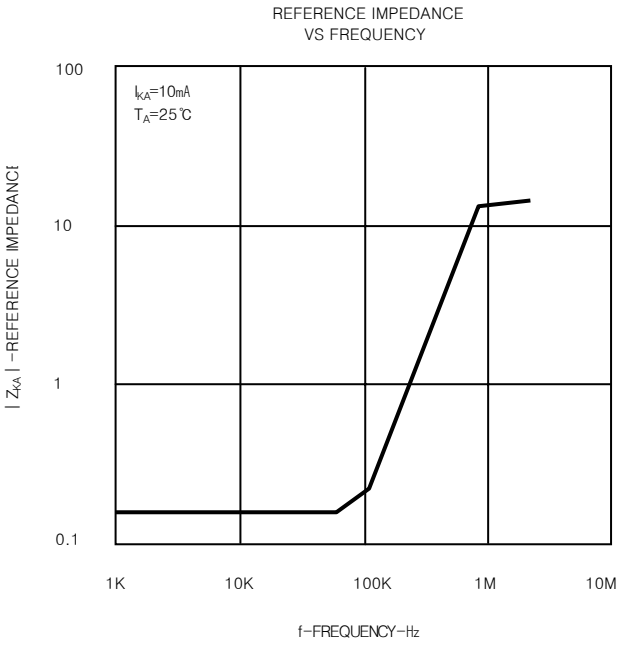

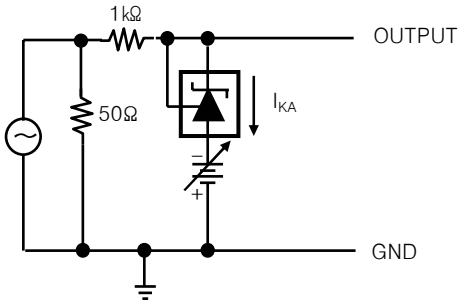

Test Circuit for Reference Impedance

Figure 11.

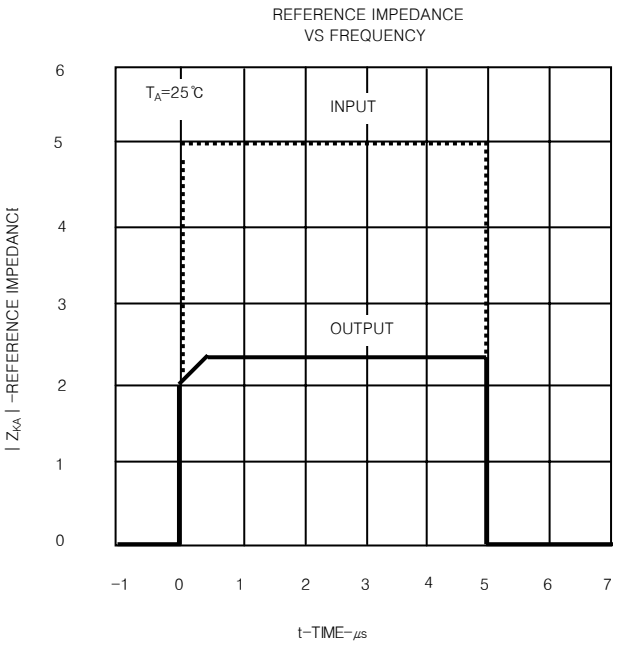

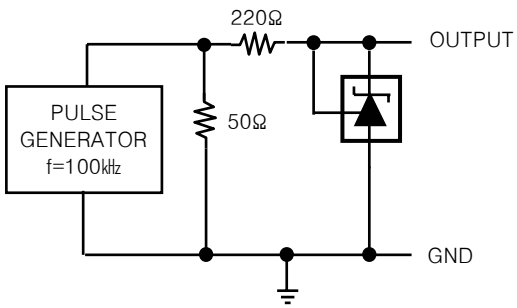

Test Circuit for Pulse Response

Figure 12.

APPLICATION INFORMATION

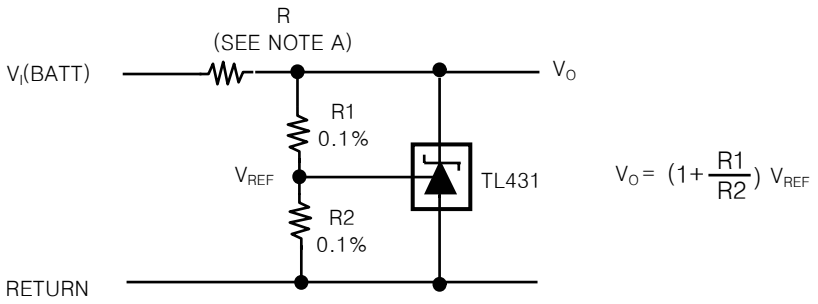

NOTE A : R Should provide cathode current≥1㎃ to the TL431 at minimum V_I(BATT)

Figure 13. Shunt Regulator

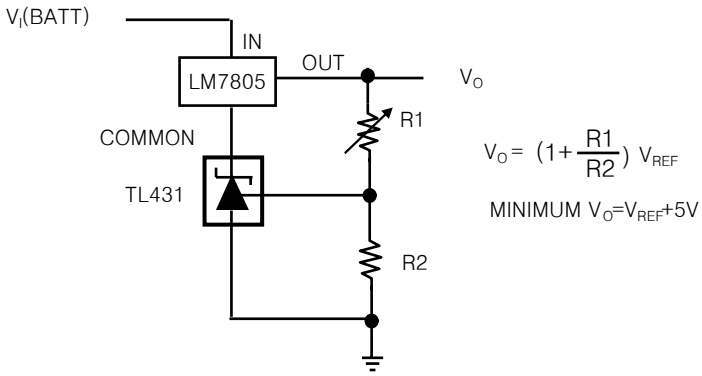

Figure 14. Output Control of a 3-Terminal Fixed Regulator

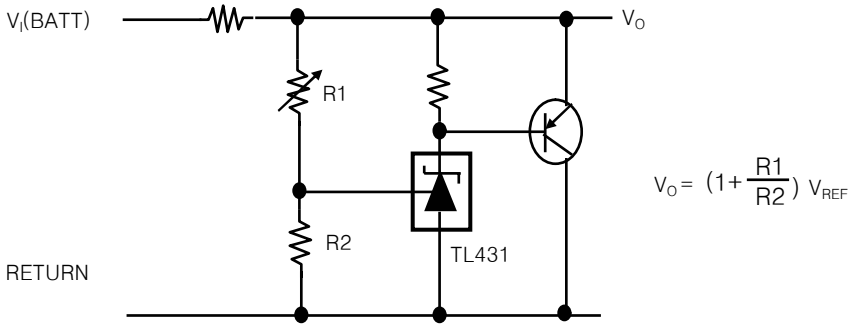

Figure 15. High-Current Shunt Regulator