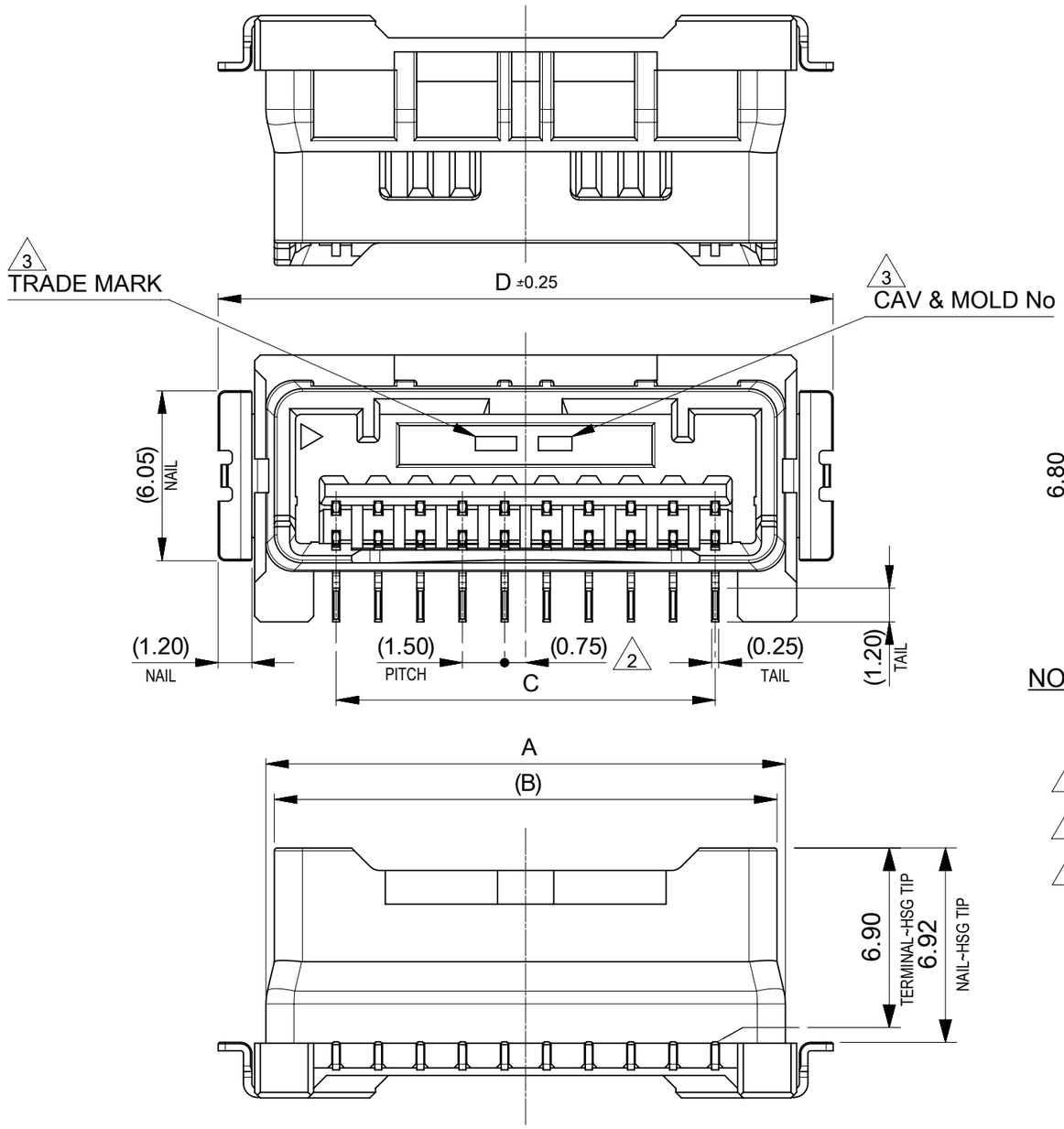

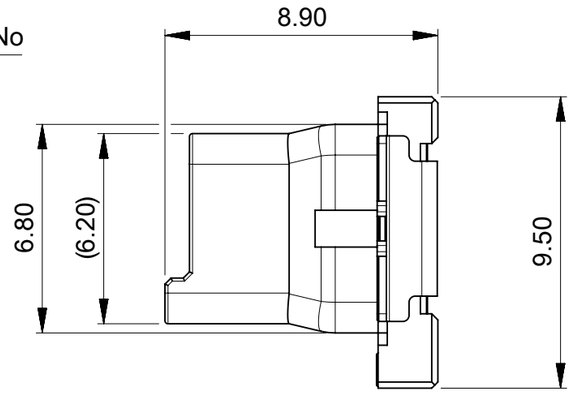

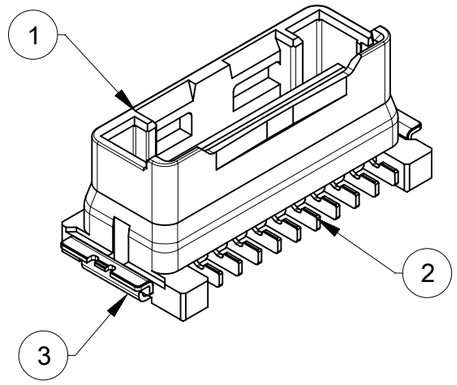

NOTE

1. 端子テール部及びネイルの平坦度： 0.1mm MAX.
   TAIL AND NAIL COPLANARITY TO BE 0.1 MAX.
2. (極数) = 偶数に適用
   APPLY FOR (CIRCUIT SIZE)=EVEN.
3. 適用製品及び各種仕様書はSHEET 3を参照のこと
   REFER TO SHEET 3 ABOUT APPLICABLE PRODUCTS AND VARIOUS SPECIFICATIONS.
4. トレードマーク：MXプラス1文字の製造工場を示すアルファベットにて表示
   但し、"J"はJAPANを示す(例：MXJ)
   キャビティ番号：1～2桁の数字にて表示
   金型番号：アルファベット1文字にて表示

番号 NO.	部品 PART	材質 MATERIAL
①	ハウジング HOUSING	ポリアミド(PA)　UL94V-0 色：SEE CHART POLYAMIDE(PA) UL94V-0 COLOR : SEE CHART
②	ターミナル TERMINAL	銅合金 COPPER ALLOY
		錫めっき　：1.0 micro-meter MIN MATTE TIN PLATING
		ニッケルめっき(下地)：1.0 micro-meter MIN NICKEL (UNDER PLATING)
③	ネイル NAIL	黄銅 BRASS
		錫めっき　：1.0 micro-meter MIN MATTE TIN PLATING
		ニッケルめっき(下地)：1.0 micro-meter MIN NICKEL (UNDER PLATING)

DOCUMENT STATUS	P1	RELEASE DATE	2025/07/01　07:04:19

D	C	B	A	極数 CIRCUIT NO
21.9	13.5	17.9	18.5	10
18.9	10.5	14.9	15.5	8
17.4	9	13.4	14	7
15.9	7.5	11.9	12.5	6
12.9	4.5	8.9	9.5	4
11.4	3	7.4	8	3
±0.25	±0.20	±0.25	(±0.20)	

THIS DRAWING CONTAINS INFORMATION THAT IS PROPRIETARY TO MOLEX ELECTRONIC TECHNOLOGIES, LLC AND SHOULD NOT BE USED WITHOUT WRITTEN PERMISSION

DIMENSION UNITS: mm　SCALE: NTS

GENERAL TOLERANCES (UNLESS SPECIFIED)

ANGULAR TOL	± 3.0 °
4 PLACES	± 0.2
3 PLACES	± 0.2
2 PLACES	± 0.2
1 PLACE	± 0.2
0 PLACES	± 0.2

DRAFT WHERE APPLICABLE MUST REMAIN WITHIN DIMENSIONS

CURRENT REV DESC: REMOVED OBSOLETED PART NUMBERS AS PER PCN #515183

EC NO: 826030
DRWN: PRANAA 2025/06/25
CHK'D: GGA 2025/07/01
APPR: GGA 2025/07/01

INITIAL REVISION:
DRWN: MIKEDA01 2019/07/22
APPR: KOMURAKAMI 2020/03/03

THIRD ANGLE PROJECTION　DRAWING: A3-SIZE　SERIES: 503395

molex

CLIK-MATE 1.5
BOTTOM ENTRY TYPE

PRODUCT CUSTOMER DRAWING

DOCUMENT NUMBER	DOC TYPE	DOC PART	REVISION
5033950000-SD	PSD	000	A1

MATERIAL NUMBER	CUSTOMER	SHEET NUMBER
503395****	GENERAL	1 OF 5

FORMAT: master-tb-prod-A3
REVISION: J1
DATE: 2021/05/01

極数別ハウジング形状
HOUSING SHAPE AT EACH CKT

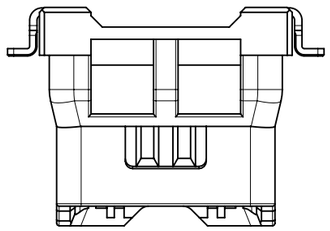

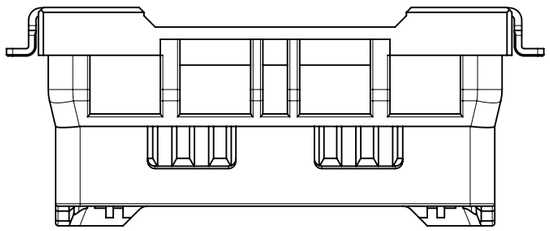

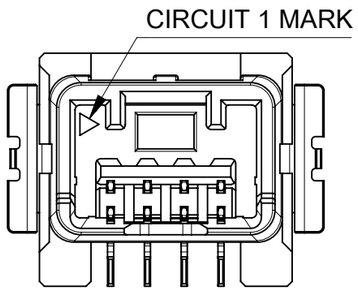

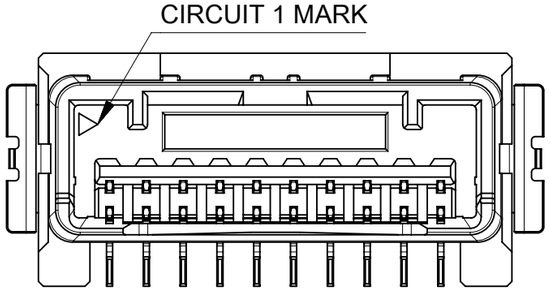

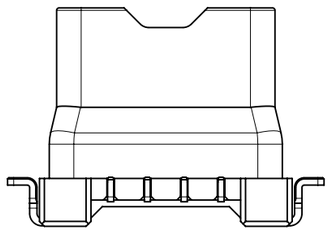

3~4極
3-4 CIRCUITS

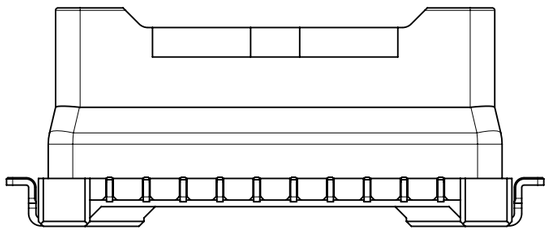

6~10極
6-10 CIRCUITS

嵌合図
MATED CONNECTORS

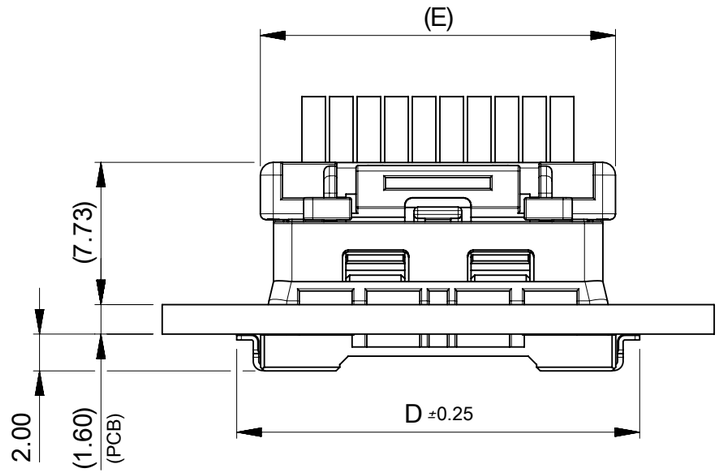

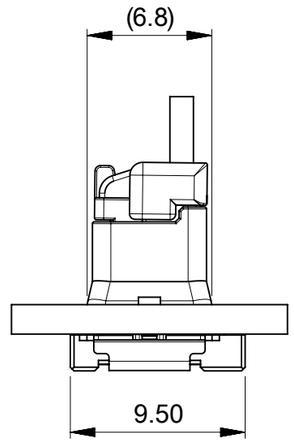

E	D	極数 CIRCUIT NO
19.3	21.9	10
16.3	18.9	8
14.8	17.4	7
13.3	15.9	6
10.3	12.9	4
8.8	11.4	3

THIS DRAWING CONTAINS INFORMATION THAT IS PROPRIETARY TO MOLEX ELECTRONIC TECHNOLOGIES, LLC AND SHOULD NOT BE USED WITHOUT WRITTEN PERMISSION

DIMENSION UNITS	SCALE
mm	NTS

GENERAL TOLERANCES (UNLESS SPECIFIED)

ANGULAR TOL	±	3.0 °
4 PLACES	±	0.2
3 PLACES	±	0.2
2 PLACES	±	0.2
1 PLACE	±	0.2
0 PLACES	±	0.2

DRAFT WHERE APPLICABLE MUST REMAIN WITHIN DIMENSIONS

CURRENT REV DESC: REMOVED OBSOLETED PART NUMBERS AS PER PCN #515183

EC NO: 826030
DRWN: PRANAA 2025/06/25
CHK'D: GGA 2025/07/01
APPR: GGA 2025/07/01

INITIAL REVISION:
DRWN: MIKEDA01 2019/07/22
APPR: KOMURAKAMI 2020/03/03

THIRD ANGLE PROJECTION | DRAWING: A3-SIZE | SERIES: 503395

molex

CLIK-MATE 1.5
BOTTOM ENTRY TYPE

PRODUCT CUSTOMER DRAWING

DOCUMENT NUMBER	DOC TYPE	DOC PART	REVISION
5033950000-SD	PSD	000	A1

MATERIAL NUMBER	CUSTOMER	SHEET NUMBER
503395****	GENERAL	2 OF 5

DOCUMENT STATUS	P1	RELEASE DATE	2025/07/01 07:04:19

FORMAT: master-lb-prod-A3
REVISION: J1
DATE: 2021/05/01

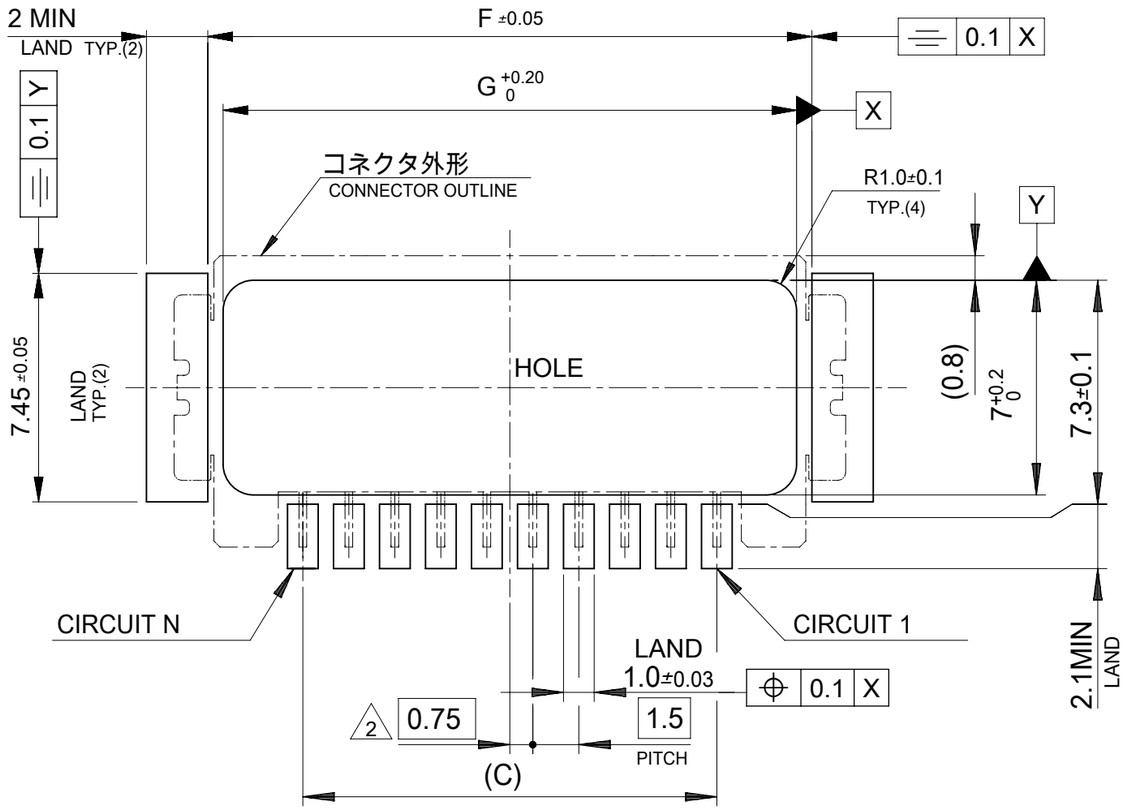

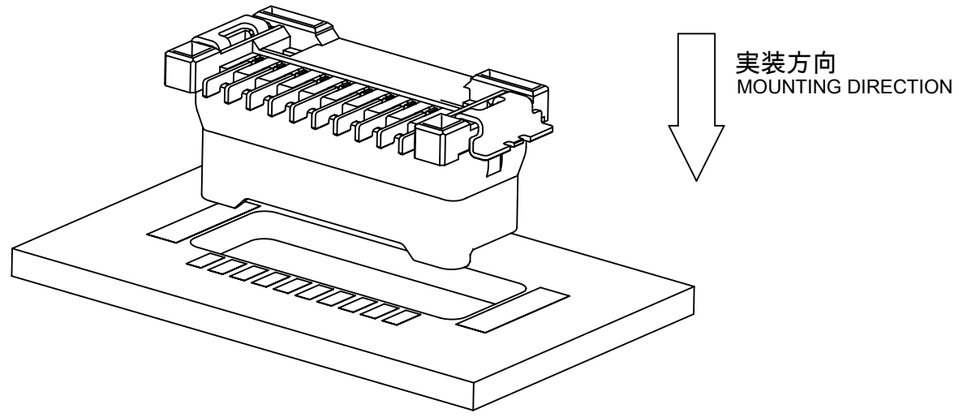

実装方向
MOUNTING DIRECTION

推奨基板寸法(実装面)

RECOMMENDED PCB LAYOUT (MOUNT SIDE)

NOTE

5. 推奨メタルマスク　RECOMMENDED METAL STENCIL SPECIFIKATION.
   マスク厚；0.15mm　STENCIL THICKNESS : 0.15mm
   尚、貴社にて上記以外でご使用頂く場合、事前にご確認頂きます様お願い致します。
   IF YOU USE ANOTHER THICKNESS WRITTEN ABOVE, PLEASE CONFIRM BEFOREHAND AS YOUR RESPONSIBILITY

△3 適用製品及び各種仕様書

APPLICABLE PRODUCTS AND VARIOUS SPECIFICATIONS

梱包仕様書 PACKAGING SPECIFICATION	PART NUMBER	DOCUMENT NUMBER
	503395 **1*	SPK-503395-001

適用嵌合相手 MATE WITH	HOUSING	TERMINAL	
		#24-28	#26-30
シリーズ番号 SERIES NUMBER	502578	502579	503429
製品仕様書 PRODUCT SPECIFICATION	5025780003-PS		
アプリケーション仕様書 APPLICATION SPECIFICATION	AS-503395-001		

18.7	±0.25	19.3	±0.25	13.5	±0.25	10
15.7		16.3		10.5		8
14.2		14.8		9	(±0.20)	7
12.7		13.3		7.5		6
9.7	(±0.20)	10.3		4.5		4
8.2		8.8	(±0.20)	3		3
G		F		C		極数 CIRCUIT NO

THIS DRAWING CONTAINS INFORMATION THAT IS PROPRIETARY TO MOLEX ELECTRONIC TECHNOLOGIES, LLC AND SHOULD NOT BE USED WITHOUT WRITTEN PERMISSION

DIMENSION UNITS	SCALE
mm	NTS

GENERAL TOLERANCES (UNLESS SPECIFIED)

ANGULAR TOL	±	3.0 °
4 PLACES	±	0.2
3 PLACES	±	0.2
2 PLACES	±	0.2
1 PLACE	±	0.2
0 PLACES	±	0.2

DRAFT WHERE APPLICABLE MUST REMAIN WITHIN DIMENSIONS

CURRENT REV DESC: REMOVED OBSOLETED PART NUMBERS AS PER PCN #515183

EC NO: 826030
DRWN: PRANAA 2025/06/25
CHK'D: GGA 2025/07/01
APPR: GGA 2025/07/01

INITIAL REVISION:
DRWN: MIKEDA01 2019/07/22
APPR: KOMURAKAMI 2020/03/03

THIRD ANGLE PROJECTION | DRAWING: A3-SIZE | SERIES: 503395

molex

CLIK-MATE 1.5
BOTTOM ENTRY TYPE

PRODUCT CUSTOMER DRAWING

DOCUMENT NUMBER	DOC TYPE	DOC PART	REVISION
5033950000-SD	PSD	000	A1

MATERIAL NUMBER	CUSTOMER	SHEET NUMBER
503395****	GENERAL	3 OF 5

DOCUMENT STATUS	P1	RELEASE DATE	2025/07/01 07:04:19

FORMAT: master-ib-prod-A3
REVISION: J1
DATE: 2021/05/01

24mm幅エンボステープ
SCALE 2:1

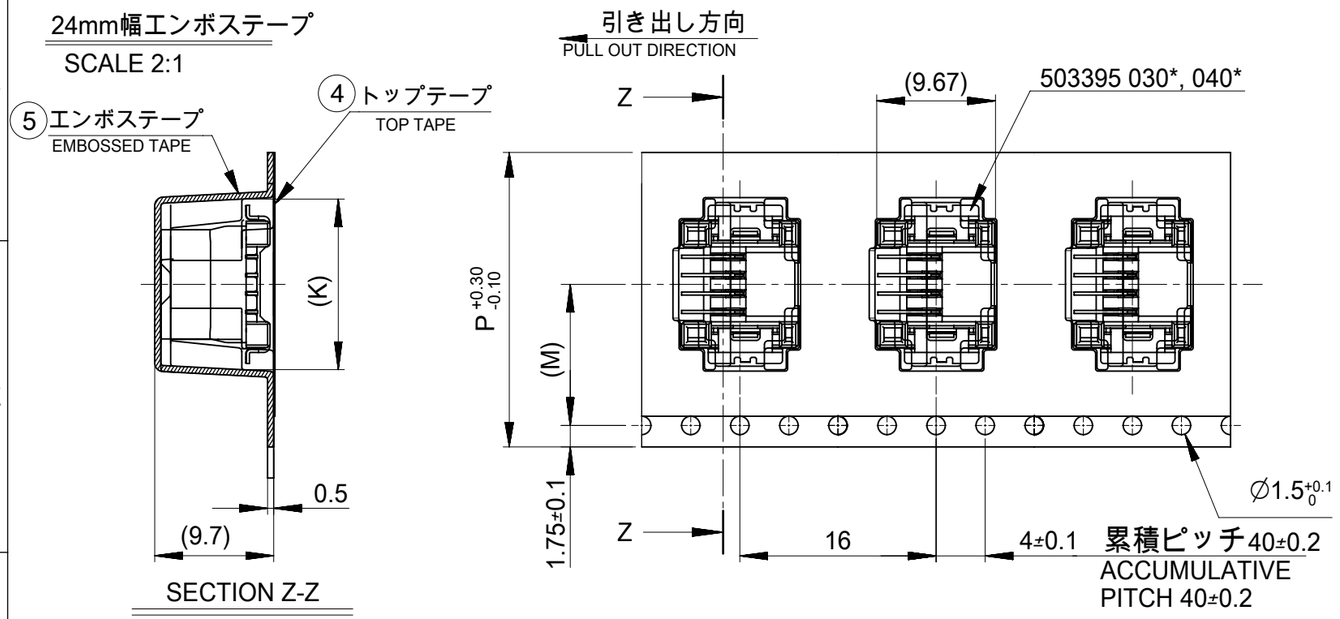

SECTION Z-Z

32, 44mm幅エンボステープ
SCALE 2:1

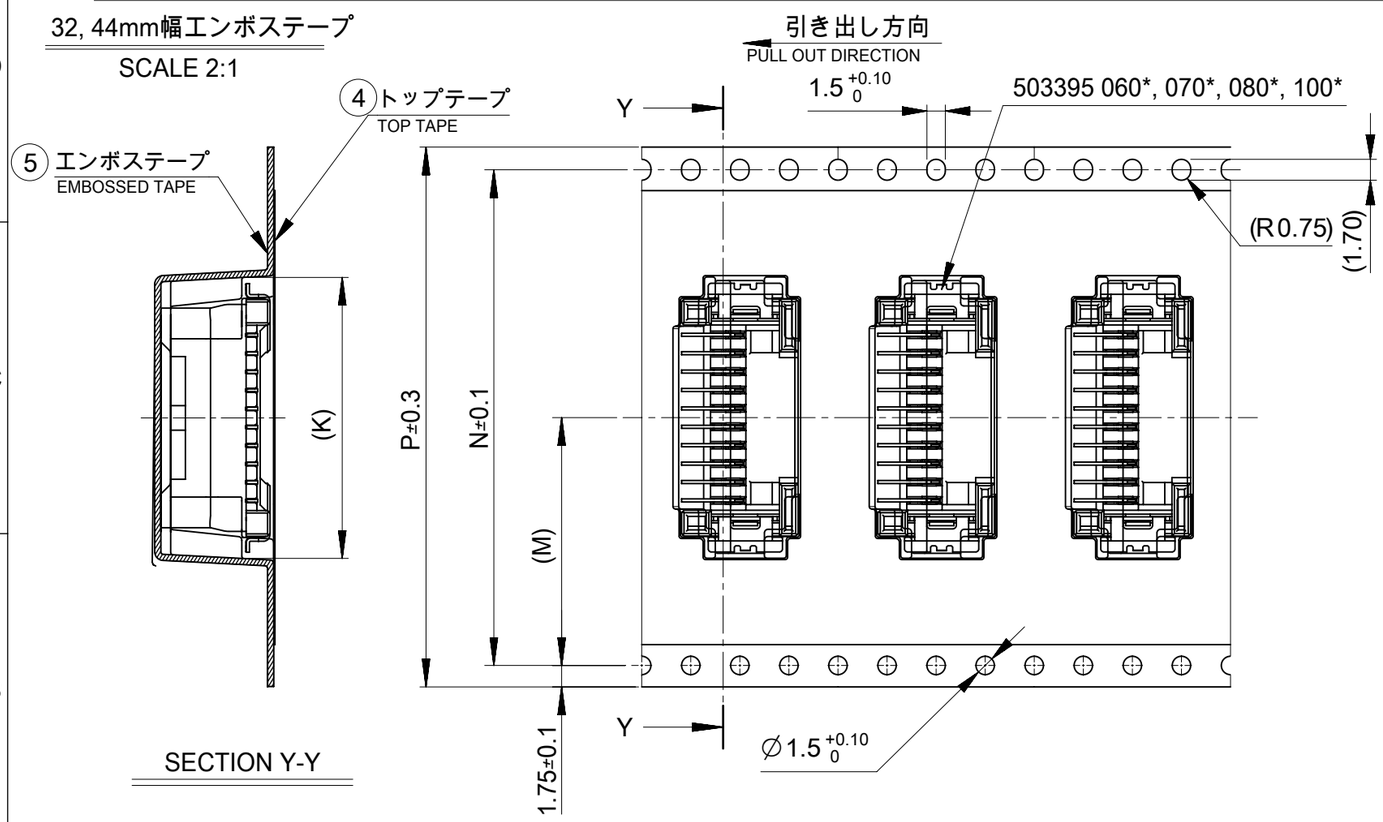

SECTION Y-Y

引き出し方向
PULL OUT DIRECTION

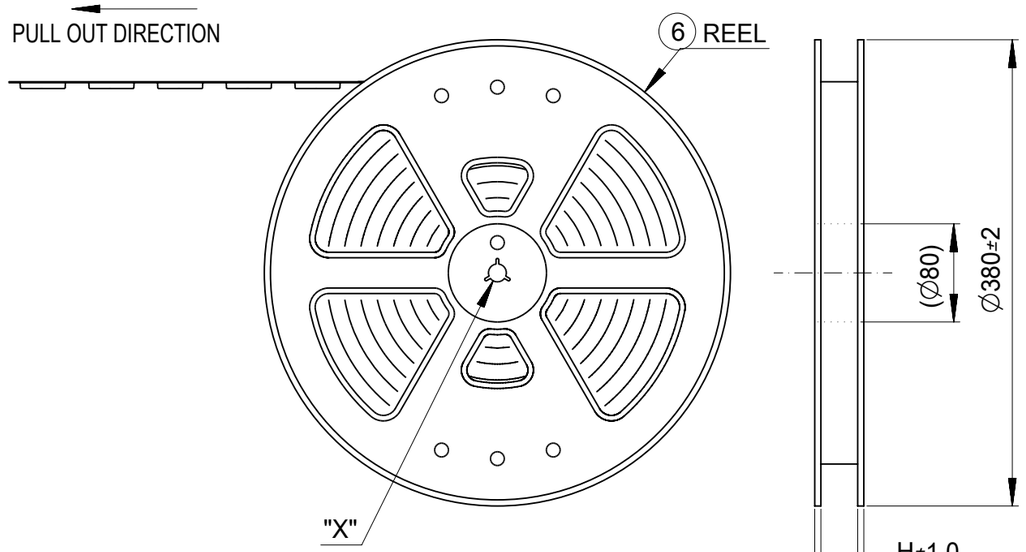

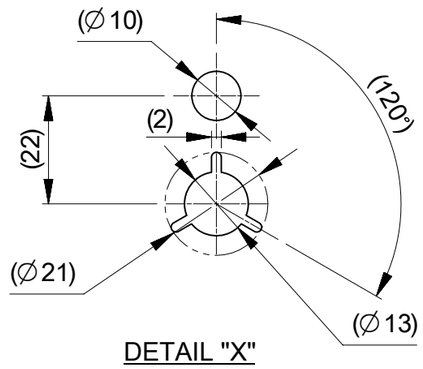

DETAIL "X"

44	40.4	20.2	22.9	49.4	45.4	10
32	28.4	14.2	19.9	37.4	33.4	8
			18.4			7
			16.9			6
24	-	11.5	13.9	29.4	25.4	4
			12.4			3
P : エンボス幅 EMBOSSED TAPE WIDTH	N	(M)	(K)	J	H	極数 CIRCUIT NO

番号 NO.	部品 PART	材質 MATERIAL
④	エンボステープ EMBOSSED TAPE	ポリスチレン(PS) POLYSTYRENE(PS)
⑤	トップテープ TOP TAPE	ポリエチレン、ポリエチレンテレフタレート POLYETHLENE(PE), POLYETHYLENE TEREPHTHALATE(PET)
⑥	リール REEL	ポリスチレン(PS) <リサイクル材を含む> POLYSTYRENE(PS) <RECYCLE MATERIAL CONTAINED>

DOCUMENT STATUS | P1 | RELEASE DATE | 2025/07/01 07:04:19

THIS DRAWING CONTAINS INFORMATION THAT IS PROPRIETARY TO MOLEX ELECTRONIC TECHNOLOGIES, LLC AND SHOULD NOT BE USED WITHOUT WRITTEN PERMISSION

DIMENSION UNITS: mm | SCALE: NTS

GENERAL TOLERANCES (UNLESS SPECIFIED)

ANGULAR TOL	±	3.0 °
4 PLACES	±	0.2
3 PLACES	±	0.2
2 PLACES	±	0.2
1 PLACE	±	0.2
0 PLACES	±	0.2

DRAFT WHERE APPLICABLE MUST REMAIN WITHIN DIMENSIONS

CURRENT REV DESC: REMOVED OBSOLETED PART NUMBERS AS PER PCN #515183

EC NO: 826030
DRWN: PRANAA 2025/06/25
CHK'D: GGA 2025/07/01
APPR: GGA 2025/07/01

INITIAL REVISION:
DRWN: MIKEDA01 2019/07/22
APPR: KOMURAKAMI 2020/03/03

THIRD ANGLE PROJECTION | DRAWING: A3-SIZE | SERIES: 503395

molex

CLIK-MATE 1.5
BOTTOM ENTRY TYPE

PRODUCT CUSTOMER DRAWING

DOCUMENT NUMBER	DOC TYPE	DOC PART	REVISION
5033950000-SD	PSD	000	A1

MATERIAL NUMBER	CUSTOMER	SHEET NUMBER
503395****	GENERAL	4 OF 5

FORMAT: master-ib-prod-A3
REVISION: J1
DATE: 2021/05/01

NOTES

6. 梱包数量： 600個 / リール
   NUMBER OF CONNECTORS : 600 PCS/REEL.

7. リードテープ長さ
   LEAD TAPE LENGTH

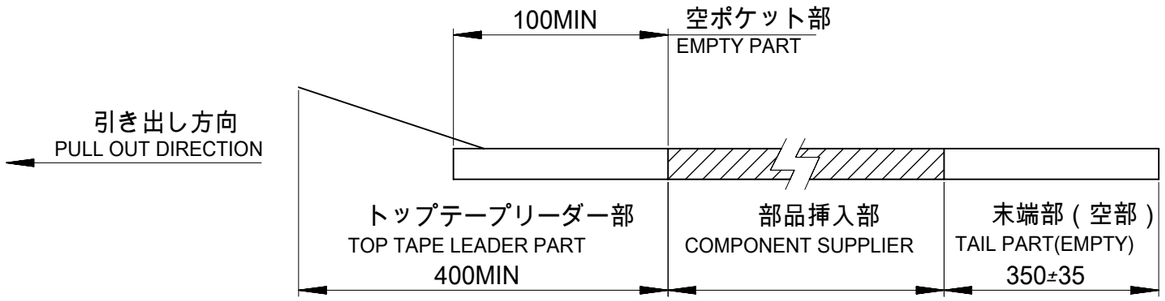

8. トップテープの剥離強度はJIS C0806-3に準拠
   TOP TAPE PEELING FORCE IS DEFINED BY JIS C0806-3

9. 本製品は乾燥剤入り、ハイバリア梱包による納入となります
   THIS PRODUCT IS DELIVERED IN A HIGH BARRIER PACKAGE WITH DESICCANT

10. オーダー番号(製品番号):
    ORDER NO (MATERIAL NO):

503395 **1*

シリーズ番号 SERIES NO
極数 CIRCUIT SIZE
色 COLOR

NO.	色　COLOR
0	ナチュラル NATURAL (ベージュ　BEIGE)
1	黒　BLACK
2	赤　RED
4	青　BLUE
6	緑　GREEN

緑 GREEN	青 BLUE	赤 RED	黒 BLACK	ナチュラル(ベージュ) NATURAL(BEIGE)	色 COLOR
---	---	---	---	503395 1010	10
---	---	---	503395 0811	503395 0810	8
---	---	---	---	503395 0710	7
---	---	---	---	503395 0610	6
---	---	---	---	503395 0410	4
---	---	---	503395 0311	503395 0310	3
オーダー番号 ORDER NO					極数 CIRCUIT NO

THIS DRAWING CONTAINS INFORMATION THAT IS PROPRIETARY TO MOLEX ELECTRONIC TECHNOLOGIES, LLC AND SHOULD NOT BE USED WITHOUT WRITTEN PERMISSION

DIMENSION UNITS	SCALE
mm	NTS

GENERAL TOLERANCES (UNLESS SPECIFIED)

ANGULAR TOL	±	3.0 °
4 PLACES	±	0.2
3 PLACES	±	0.2
2 PLACES	±	0.2
1 PLACE	±	0.2
0 PLACES	±	0.2

DRAFT WHERE APPLICABLE MUST REMAIN WITHIN DIMENSIONS

CURRENT REV DESC: REMOVED OBSOLETED PART NUMBERS AS PER PCN #515183

EC NO: 826030
DRWN: PRANAA 2025/06/25
CHK'D: GGA 2025/07/01
APPR: GGA 2025/07/01

INITIAL REVISION:
DRWN: MIKEDA01 2019/07/22
APPR: KOMURAKAMI 2020/03/03

molex

CLIK-MATE 1.5
BOTTOM ENTRY TYPE

PRODUCT CUSTOMER DRAWING

DOCUMENT NUMBER	DOC TYPE	DOC PART	REVISION
5033950000-SD	PSD	000	A1

THIRD ANGLE PROJECTION	DRAWING	SERIES	MATERIAL NUMBER	CUSTOMER	SHEET NUMBER
	A3-SIZE	503395	503395****	GENERAL	5 OF 5

DOCUMENT STATUS	P1	RELEASE DATE	2025/07/01 07:04:19

FORMAT: master-ib-prod-A3
REVISION: J1
DATE: 2021/05/01