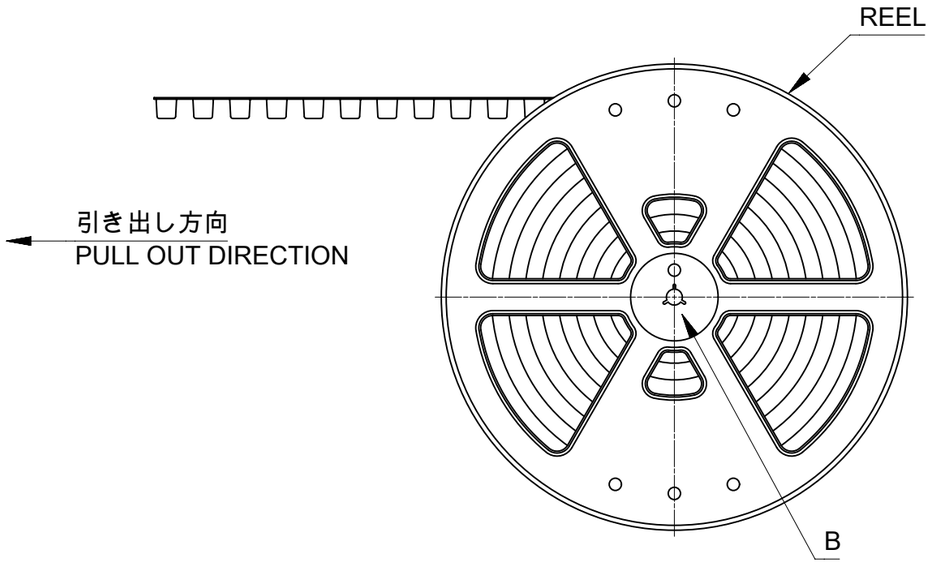

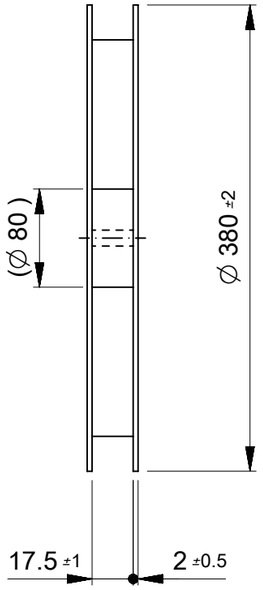

NOTES
1.製品詳細寸法は製品単体図面を参照して下さい。
FOR DETAIL OF CONNECTOR DIMENSIONS,PLEASE SEE THE DRAWING OF CONNECTOR ITSELF(NOT PACKAGED).
2.梱包数量： １３００個 / リール
NUMBER OF CONNECTORS : 1300PIECES/REEL
3.リードテープ長さ
LEAD TAPE LENGTH

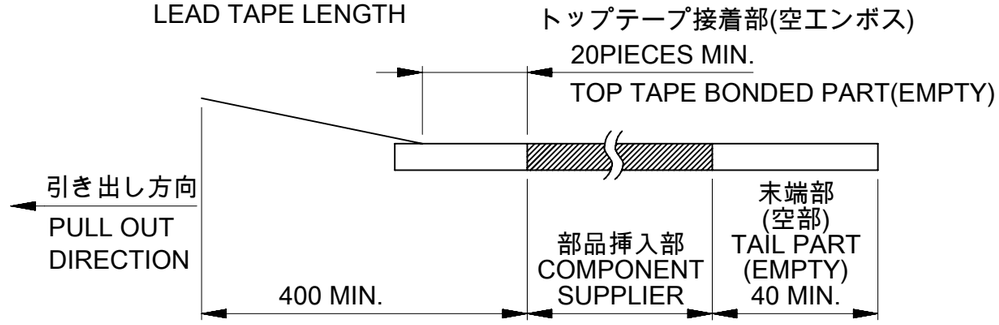

4.材料
MATERIAL
キャリアテープ：ポリスチレン(PS)
CARRIER TAPE : POLYSTYRENE
トップテープ：ポリエステル(PET)、その他
TOP TAPE:POLYESTER(PET),OTHER
リール：ポリスチレン(PS)<リサイクル材を含む>
REEL : POLYSTYRENE 〈RECYCLE MATERIAL CONTAINED〉

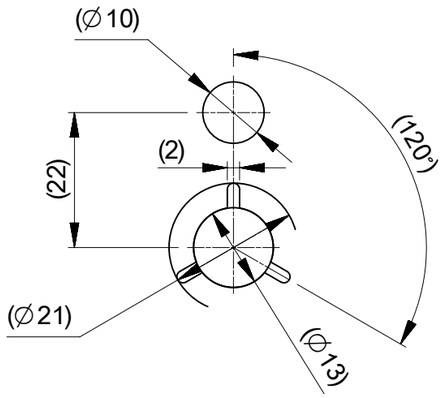

DETAIL B

THIS DRAWING CONTAINS INFORMATION THAT IS PROPRIETARY TO MOLEX ELECTRONIC TECHNOLOGIES, LLC AND SHOULD NOT BE USED WITHOUT WRITTEN PERMISSION

EC NO: 168346 2017/11/27
DRWN: KYAMADA02 2017/11/30
CHK'D: SAKIYAMA 2017/12/01
APPR: TKANEKO

GENERAL TOLERANCES (UNLESS SPECIFIED)		
ANGULAR TOL ± 3.0 °		
4 PLACES	±	0.2
3 PLACES	±	0.2
2 PLACES	±	0.2
1 PLACE	±	0.2
0 PLACES	±	0.2

DRAFT WHERE APPLICABLE MUST REMAIN WITHIN DIMENSIONS

REV	
A	

DIMENSION UNITS	mm
SCALE	NTS
DRWN BY	KYAMADA02
DATE	2017/11/27
CHK'D BY	SAKIYAMA
DATE	2017/11/30
APPR BY	TKANEKO
DATE	2017/12/01
DRAWING SIZE	A3
THIRD ANGLE PROJECTION	

molex®

PICO-CLASP 1.0W/B SINGLE-ROW R/A
OUTER LOCK EMBSTP PKG(GOLD VERSION 0.1)

PRODUCT CUSTOMER DRAWING

SERIES	MATERIAL NUMBER	CUSTOMER
501953	SEE CHART	GENERAL

DOCUMENT NUMBER	DOC TYPE	DOC PART	SHEET NUMBER
5019530305-SD	PSD	000	1 OF 2

RELEASE STATUS	P1	RELEASE DATE	01.12.2017 05:25:28

FORMAT: tb-prod-A3
REVISION: G
DATE: 2017/02/06

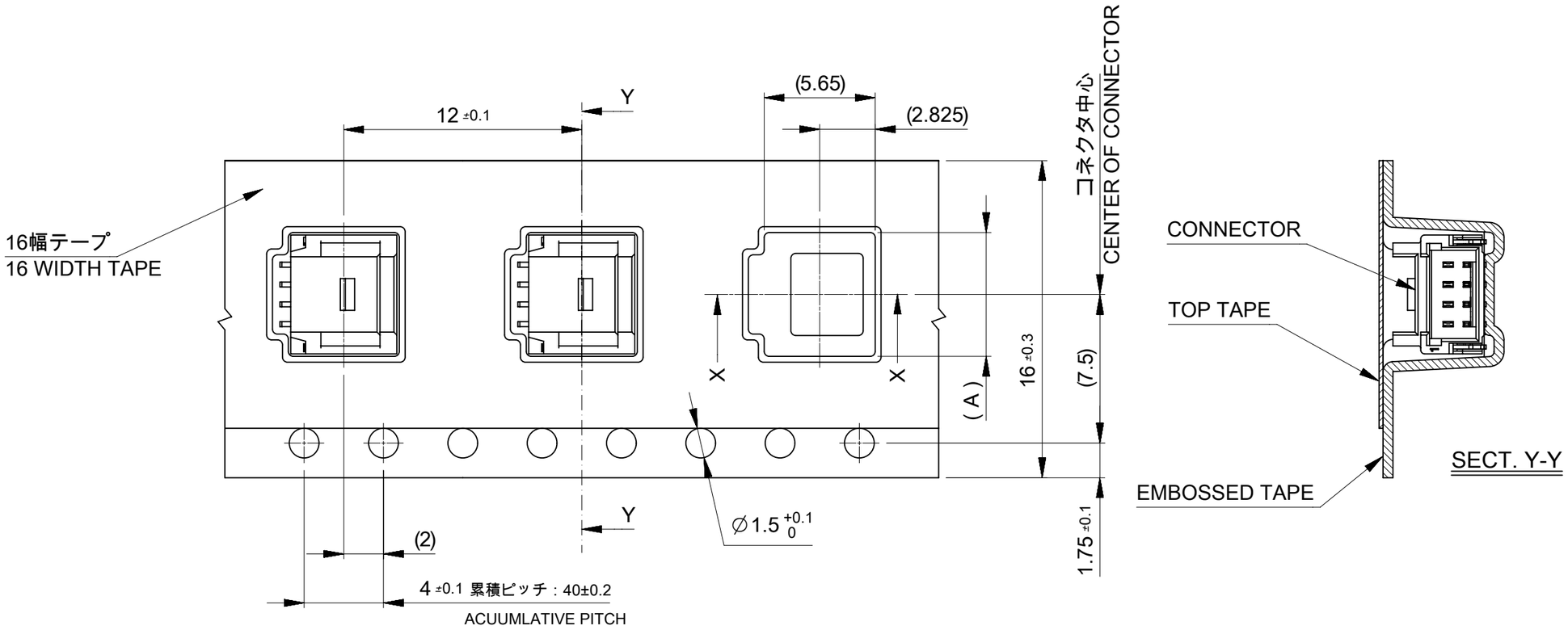

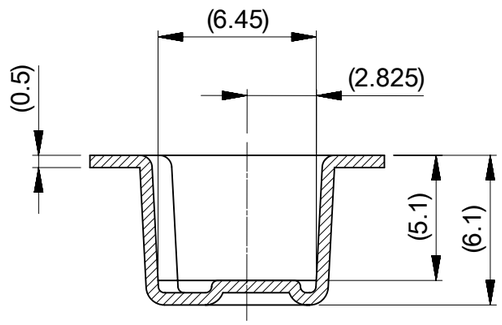

SECT. X-X

7.3	5019530505	5
6.3	5019530405	4
5.3	5019530305	3
(A)	EMBOSSED PACKAGE	極数 CIRCUITS
	オーダー番号 ORDER NO.	
CONNECTOR SERIES NO. 501953**06		

THIS DRAWING CONTAINS INFORMATION THAT IS PROPRIETARY TO MOLEX ELECTRONIC TECHNOLOGIES, LLC AND SHOULD NOT BE USED WITHOUT WRITTEN PERMISSION

EC NO: 168346 2017/11/27
DRWN: KYAMADA02 2017/11/30
CHK'D: SAKIYAMA 2017/12/01
APPR: TKANEKO

REV: A

GENERAL TOLERANCES (UNLESS SPECIFIED)

ANGULAR TOL ±	3.0	°
4 PLACES	±	0.2
3 PLACES	±	0.2
2 PLACES	±	0.2
1 PLACE	±	0.2
0 PLACES	±	0.2

DRAFT WHERE APPLICABLE MUST REMAIN WITHIN DIMENSIONS

DIMENSION UNITS: mm
SCALE: NTS
DRWN BY: KYAMADA02 DATE: 2017/11/27
CHK'D BY: SAKIYAMA DATE: 2017/11/30
APPR BY: TKANEKO DATE: 2017/12/01
DRAWING SIZE: A3
THIRD ANGLE PROJECTION

molex®

PICO-CLASP 1.0W/B SINGLE-ROW R/A
OUTER LOCK EMBSTP PKG(GOLD VERSION 0.1)

PRODUCT CUSTOMER DRAWING

SERIES	MATERIAL NUMBER	CUSTOMER
501953	SEE CHART	GENERAL

DOCUMENT NUMBER	DOC TYPE	DOC PART	SHEET NUMBER
5019530305-SD	PSD	000	2 OF 2

RELEASE STATUS	P1	RELEASE DATE	01.12.2017 05:25:28

FORMAT: master-lb-prod-A3
REVISION: G
DATE: 2017/02/06

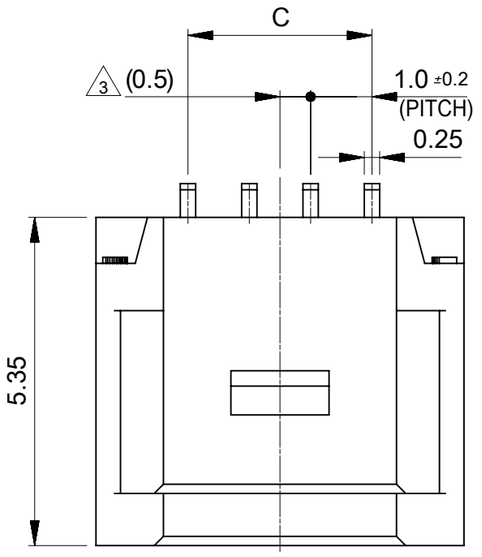

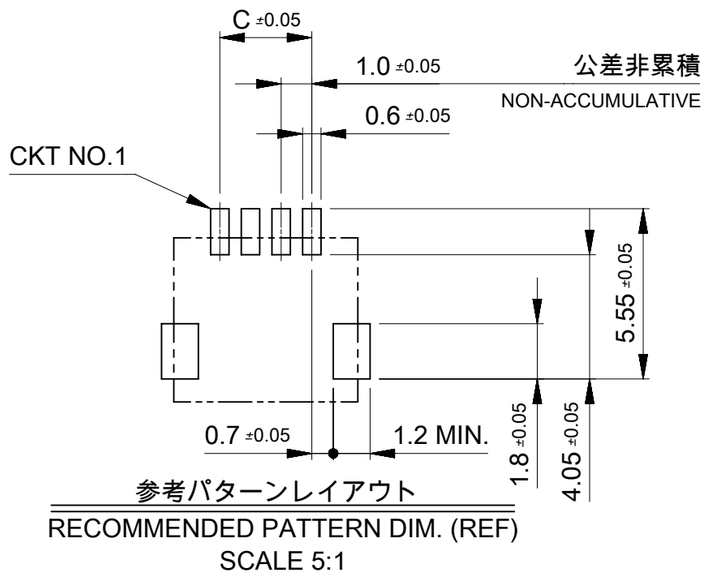

参考パターンレイアウト
RECOMMENDED PATTERN DIM. (REF)
SCALE 5:1

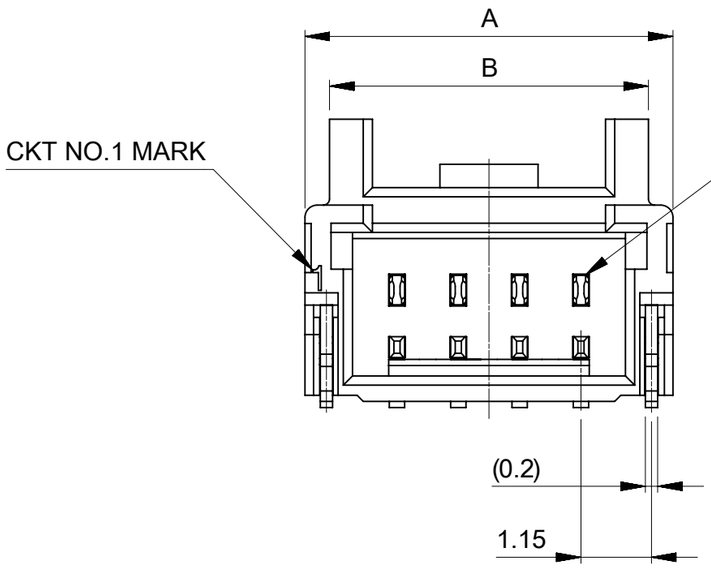

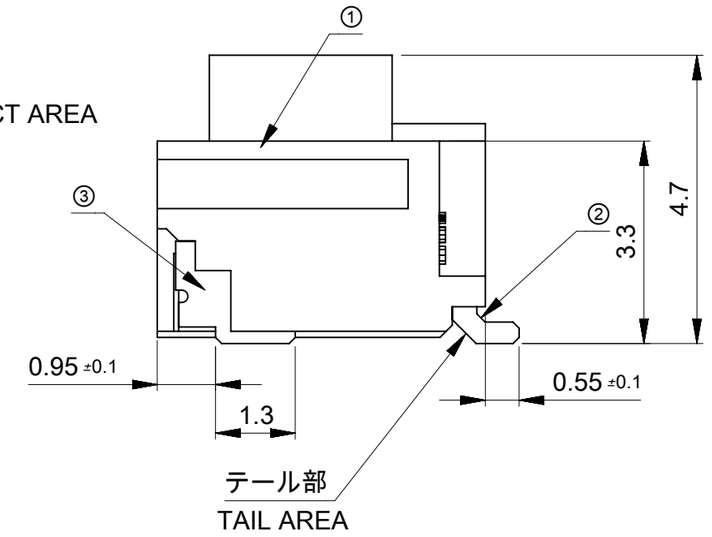

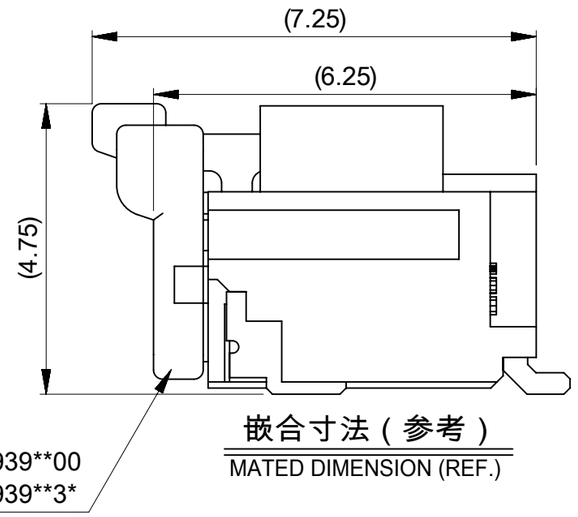

嵌合寸法（参考）
MATED DIMENSION (REF.)

番号 NO.	部品 PART	材質 MATERIAL
①	ウエハー WAFER	ポリアミド UL94V-0 色：自然色 POLYAMIDE, UL94V-0, COLOR:NATURAL
②	ソルダーピン SOLDER PIN	りん青銅 PHOSPHOR BRONZE 金めっき(接触部)：0.1 MICRO METER MIN. GOLD PLATING (CONTACT AREA) 金めっき(テール部):0.05 MICRO METER MINIMUM. GOLD PLATING (TAIL AREA) ニッケルめっき(下地):1.0 MICRO METER MIN. NICKEL(UNDER PLATING)
③	ネイル NAIL	黄銅 BRASS 錫めっき:1.0 MICRO METER MIN. TIN ニッケルめっき(下地):1.0 MICRO METER MIN. NICKEL(UNDER PLATING)

NOTES.
1.嵌合相手：501939****
MATE WITH :501939****
2.ソルダーピン及びネイル平坦度は、0.1MAX.
SOLDER PIN AND NAIL COPLANARITY TO BE 0.1MAX.
△3 極数 = 偶数に適用
APPLY FOR CKT SIZE=EVEN

4.0	5.2	7.0	5019530505	5
3.0		6.0	5019530405	4
2.0	4.2	5.0	5019530305	3
C	B	A	EMBOSSED PACKAGE	極数 CIRCUITS
			オーダー番号 ORDER NO.	

CONNECTOR SERIES NO. 501953**06

THIS DRAWING CONTAINS INFORMATION THAT IS PROPRIETARY TO MOLEX ELECTRONIC TECHNOLOGIES, LLC AND SHOULD NOT BE USED WITHOUT WRITTEN PERMISSION

EC NO: 168346 2017/11/27
DRWN: KYAMADA02 2017/11/30
CHK'D: SAKIYAMA 2017/12/01
APPR: TKANEKO

GENERAL TOLERANCES (UNLESS SPECIFIED)
ANGULAR TOL ± 3.0 °

4 PLACES	±	0.2
3 PLACES	±	0.2
2 PLACES	±	0.2
1 PLACE	±	0.2
0 PLACES	±	0.2

DRAFT WHERE APPLICABLE MUST REMAIN WITHIN DIMENSIONS

REV: A

DIMENSION UNITS: mm
SCALE: 10:1
DRWN BY: KYAMADA02 DATE: 2017/11/27
CHK'D BY: SAKIYAMA DATE: 2017/11/30
APPR BY: TKANEKO DATE: 2017/12/01
DRAWING SIZE: A3
THIRD ANGLE PROJECTION

molex®

PICO-CLASP 1.0W/B SINGLE-ROW RA
OUTER LOCK WAFER ASSY(GOLD VERSION 0.1)

PRODUCT CUSTOMER DRAWING

SERIES	MATERIAL NUMBER	CUSTOMER
501953	SEE TABLE	GENERAL

DOCUMENT NUMBER	DOC TYPE	DOC PART	SHEET NUMBER
5019530306-SD	PSD	000	1 OF 1

RELEASE STATUS	P1	RELEASE DATE	01.12.2017 05:26:15

FORMAT: tb-prod-A3
REVISION: G
DATE: 2015/12/14