NOTES:
1. MATERIALS:
   HOUSING:
   "BLANK"=NYLON 6/6, UNFILLED UL94 V-2, COLOR: NATURAL
   "210"=NYLON 6/6, UNFILLED UL94 V-0, COLOR: NATURAL
   "400"=NYLON 6/6, UNFILLED UL94 V-0, COLOR: BLACK
   TERMINALS:
   BRASS
2. TERMINAL PLATING:
   "BLANK"=.000035/(0.00090) MIN. REFLOWED MATTE TIN OVER
   .000020/(0.00050) MIN. COPPER (PREPLATE)
   (FINISH IS BRIGHT IN APPEARANCE, THICKNESS AS
   APPLIED PRIOR TO REFLOW)
   GS2=.000015/(0.00038) MIN. SELECT GOLD AND
   .000100/(0.00254) MIN. SELECT MATTE TIN
   OVER .000050/(0.00127) MIN. NICKEL OVERALL
   GS=.000030/(0.00076) MIN. SELECT GOLD AND
   .000100/(0.00254) MIN. SELECT MATTE TIN
   OVER .000050/(0.00127) MIN. NICKEL OVERALL
   S=.000100/(0.00254) MIN. BRIGHT TIN OVER
   .000050/(0.00127) MIN. NICKEL
   MS=.000100/(0.00254) MIN. MATTE TIN OVER
   .000050/(0.00127) MIN. NICKEL
3. PRODUCT SPECIFICATION: PS-5556-001
4. PACKAGING: TRAY PACKED PER PK-5566-002
5. PART MATES WITH MINI-FIT JR. RECEPTACLE NO. 5557, 46994, MINI FIT SIGMA/TPA2 NO.200453.
6. ALL DIMENSIONS ARE REFERENCE UNLESS OTHERWISE SPECIFIED.
7. PART IS NOT DESIGNED FOR CURRENT SHARING.
8. PARTS ARE NOT TO BE MATED OR UN-MATED WHILE CIRCUITS ARE LIVE.
9. PART CONFORMS TO CLASS "B" REQUIREMENTS OF COSMETIC SPECIFICATION PS-45499-002.

PART NO.	ENG. NO.	HOUSING MAT'L. (SEE NOTE 1)	PLATING (SEE NOTE 2)
39-30-1039	5566-03A3	"BLANK"	"BLANK"
39-30-2033	-03A3GS2		GS2
39-30-2031	-03A3GS		GS
39-30-5037	-03A3S		S
46999-0792	-03A3MS	"BLANK"	MS
39-30-2030	-03A3-210	210	"BLANK"
39-30-2034	-03A3GS2-210		GS2
39-30-2032	-03A3GS-210		GS
39-30-5038	-03A3S-210		S
46999-0793	-03A3MS-210	210	MS
46999-0563	5566-03A3MS-400	400	MS

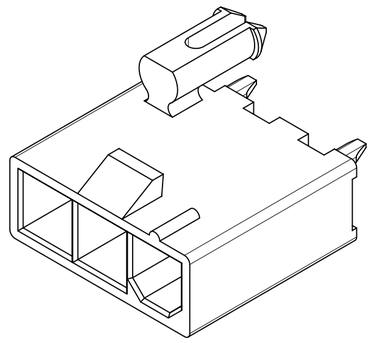

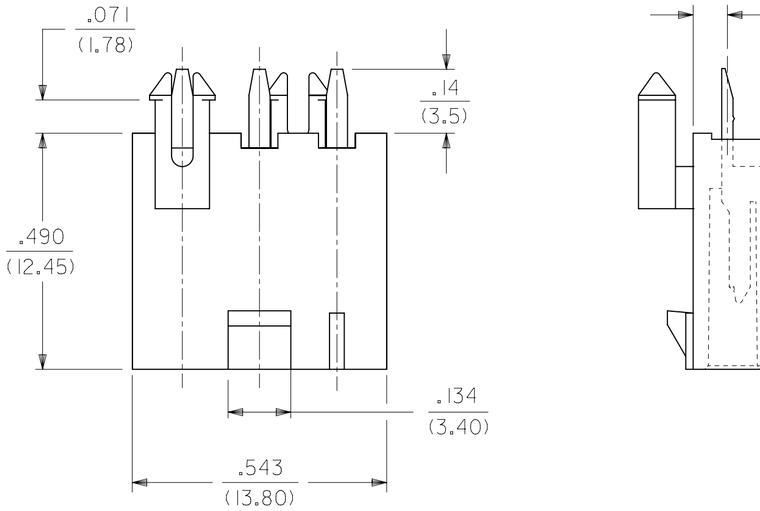

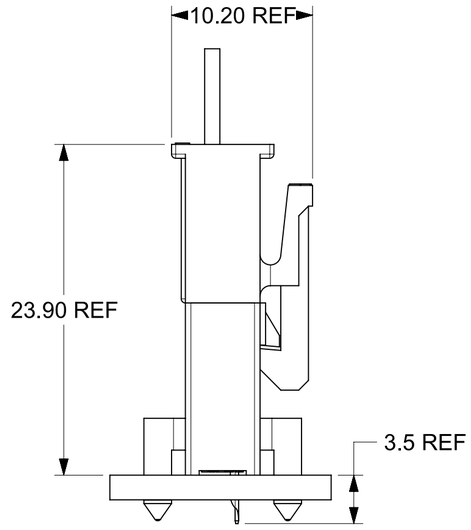

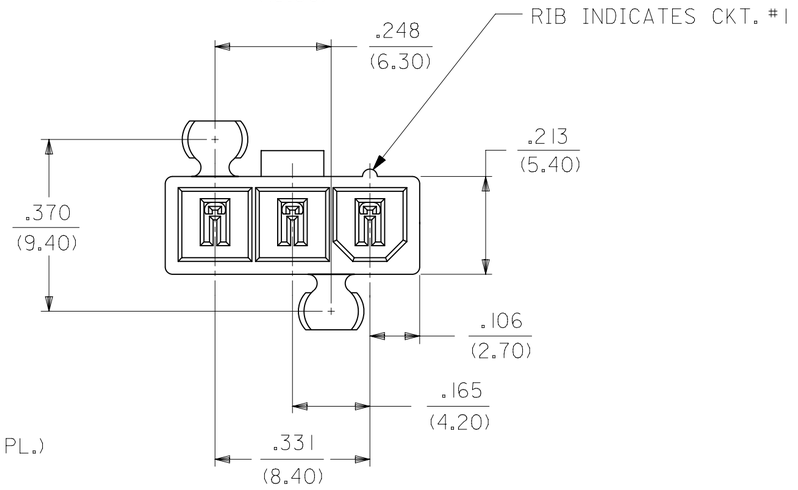

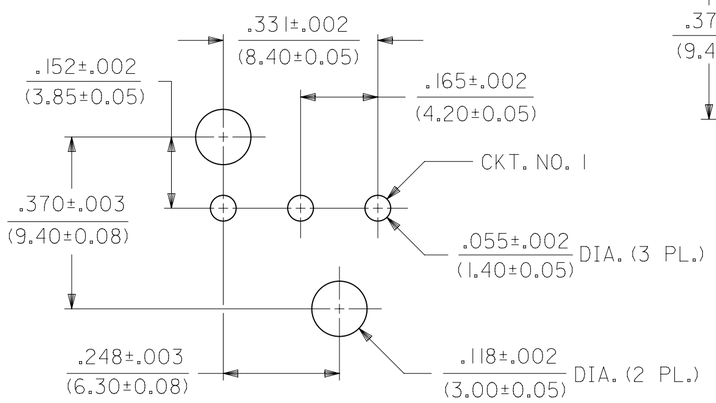

RECOMMENDED HOLE LAYOUT FOR
.070/(1.78) MAX. THICK P. C. BOARD

LEGEND

5566-03A3*-***

BASE NO.
CIRCUIT SIZE
MOUNTING
3 = SNAP FIT PEGS
PLATING
(SEE NOTE 2)
HOUSING MATERIAL
(SEE NOTE 1)

THIS DRAWING REPLACES SDA-5566-03*3*

THIS DRAWING CONTAINS INFORMATION THAT IS PROPRIETARY TO MOLEX ELECTRONIC TECHNOLOGIES, LLC AND SHOULD NOT BE USED WITHOUT WRITTEN PERMISSION

DIMENSION UNITS	SCALE
IN/MM	NTS

GENERAL TOLERANCES (UNLESS SPECIFIED)

	MM	INCH
4 PLACES	±	±
3 PLACES	±	± 0.0100
2 PLACES	± 0.250	± 0.020
1 PLACE	± 0.50	±
0 PLACES	±	±
ANGULAR TOL	± 3°	

DRAFT WHERE APPLICABLE MUST REMAIN WITHIN DIMENSIONS

CURRENT REV DESC: ADD THE VIEW OF MATING HEIGHT

STATUS: Production
DRWN: Xiao Wei Wang 2026-06-25
CHK'D: Xiao Wei Wang 2026-06-29
APPR: Xue Qing Zhang 2026-06-29

INITIAL REVISION:
DRWN: GEP 1990/06/07
APPR: FSMITH 2012/09/05

molex

MINIFIT JR VERT HDR ASSY W/ PEGS SR

PRODUCT CUSTOMER DRAWING

DOCUMENT NUMBER	DOC TYPE	DOC PART	REVISION
55660330-SD	PSD	000	B3

THIRD ANGLE PROJECTION	DRAWING	SERIES	MATERIAL NUMBER	CUSTOMER	SHEET NUMBER
	C-SIZE	5566	SEE TABLE	GENERAL MARKET	1 OF 1

FORMAT: EngAngle=TC+Eprod=C
REVISION: B
DATE: 2023/10/23