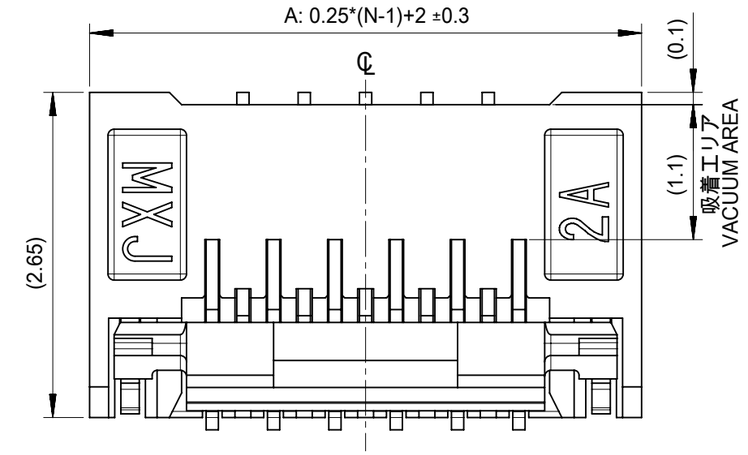

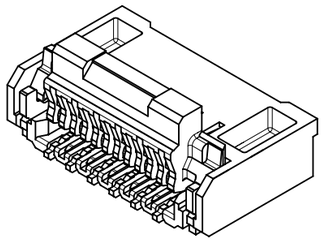

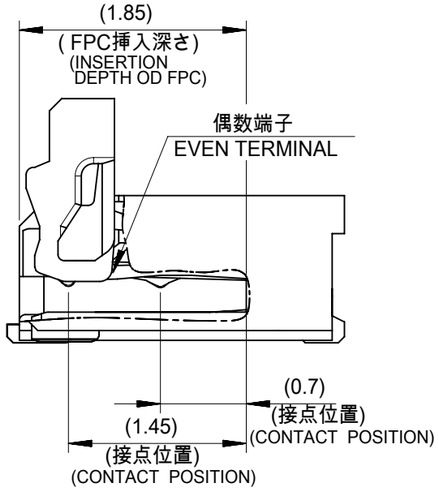

SECTION Y-Y

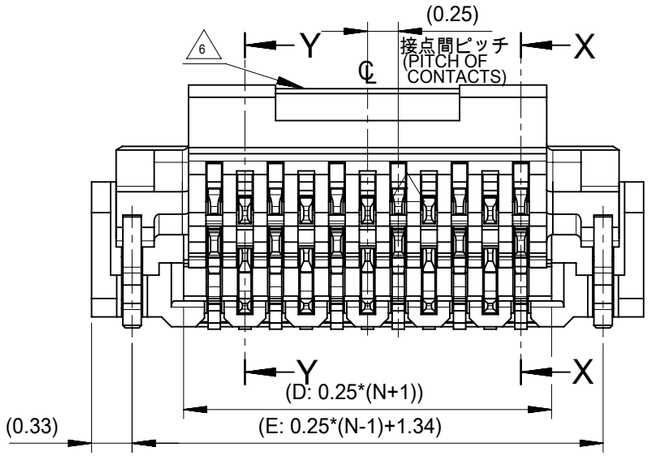

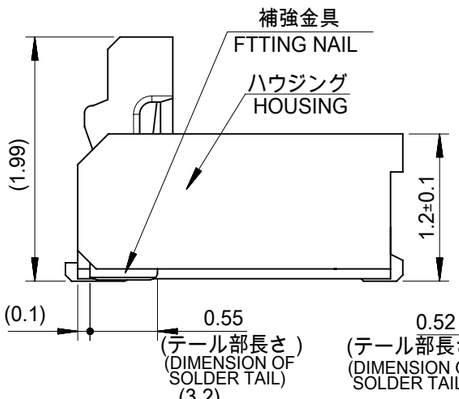

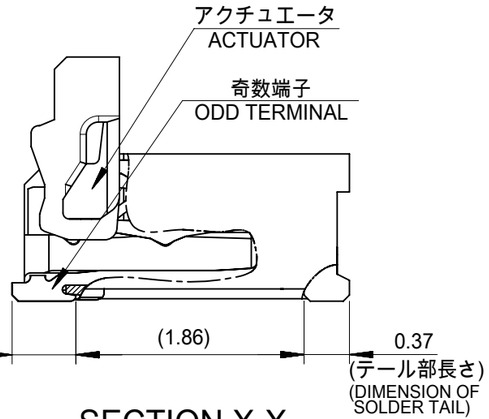

SECTION X-X

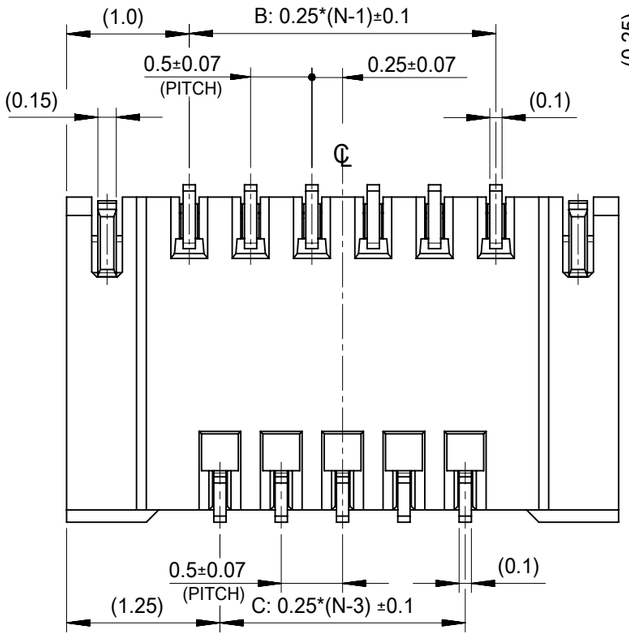

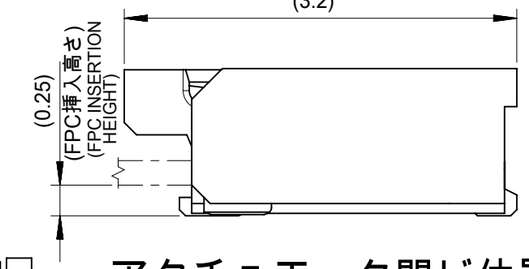

アクチュエータ閉じ位置
ACTUATOR CLOSED POSITION

注記 NOTES

1. 使用材料 MATERIALS
   - ハウジング : 液晶ポリマー(UL94V-0、黒色)
   - アクチュエータ : ポリアミド樹脂(UL94V-0、ベージュ)
   - 奇数端子 : リン青銅
   - 偶数端子 : リン青銅
   - 補強金具 : リン青銅
   - HOUSING : G.F. LCP (BLACK)
   - ACTUATOR : G.F. POLYAMIDE (BEIGE)
   - ODD TERMINAL : PHOSPHOR BRONZE
   - EVEN TERMINAL : PHOSPHOR BRONZE
   - FITTING NAIL : PHOSPHOR BRONZE
2. メッキ仕様 PLATING
   - 端子 TERMINAL
     - テール部：金メッキ
     - 接点部：金メッキ 0.1μm 以上
     - 下地：ニッケルメッキ 1.0 μm以上
     - TAIL AREA : Gold PLATING
     - CONTACT AREA : Gold PLATING 0.1μm MINIMUM
     - UNDER PLATING : Nickel PLATING 1.0μm MINIMUM
   - 金具 FITTING NAIL
     - 全面：スズメッキ 1.0 μm 以上
     - 下地：ニッケルメッキ 1.0 μm 以上
     - ALL OVER : Tin PLATING 1.0μm MINIMUM
     - UNDER PLATING : Nickel PLATING 1.0μm MINIMUM
3. 端子、補強金具のコプラナリティーは0.1以下とする
   COPLANALITY OF SOLDER TAILS AND FITTING NAILS : 0.1MAX.
4. 一般公差：±0.3
   GENERAL TOLERANCES: ±0.3
5. ELV及びRoHS適合品
   ELV AND RoHS COMPLIANT
6. ゲート部形状とする
   本形状は極数により異なります
   THIS SHAPE IS FOR GATE
   IT DEPENDS ON THE NUMBER OF CIRCUITS

14.34	13.5	12.5	13	15	503300-5310	53
11.84	11	10	10.5	12.5	503300-4310	43
11.34	10.5	9.5	10	12	503300-4110	41
10.34	9.5	8.5	9	11	503300-3710	37
8.84	8	7	7.5	9.5	503300-3110	31
8.34	7.5	6.5	7	9	503300-2910	29
6.34	5.5	4.5	5	7	503300-2110	21
5.34	4.5	3.5	4	6	503300-1710	17
E	D	C	B	A	ORDER NO. EMBOSSED TAPE PACKAGE	CIRCUITS
CONNECTOR SERIES NO.					503300-**18	

THIS DRAWING CONTAINS INFORMATION THAT IS PROPRIETARY TO MOLEX ELECTRONIC TECHNOLOGIES, LLC AND SHOULD NOT BE USED WITHOUT WRITTEN PERMISSION

DIMENSION UNITS	mm
SCALE	20:1
GENERAL TOLERANCES (UNLESS SPECIFIED)	
ANGULAR TOL	± 1.0 °
4 PLACES	± 0.3
3 PLACES	± 0.3
2 PLACES	± 0.3
1 PLACE	± 0.3
0 PLACES	± 0.3
DRAFT WHERE APPLICABLE MUST REMAIN WITHIN DIMENSIONS	

CURRENT REV DESC:

EC NO: 749229
DRWN: RAJAGN 2023/05/02
CHK'D: HSHIMOYAMA 2023/05/11
APPR: YNAITO 2023/05/11

INITIAL REVISION:
DRWN: MNIITA 2010/08/23
APPR: SHOSHIKAWA 2010/08/27

molex

0.25 PITCH FPC CONN. E/O
HGT=1.2 UPR CONTACT TYPE LOW-HALOGEN

PRODUCT CUSTOMER DRAWING

DOCUMENT NUMBER	DOC TYPE	DOC PART	REVISION
SD-503300-001	PSD	001	F

THIRD ANGLE PROJECTION	DRAWING	SERIES	MATERIAL NUMBER	CUSTOMER	SHEET NUMBER
	A3-SIZE	503300	SEE TABLE	GENERAL	1 OF 2

DOCUMENT STATUS	P1	RELEASE DATE	2023/05/11 10:55:07

FORMAT: master-lb-prod-A3
REVISION: J1
DATE: 2021/05/01

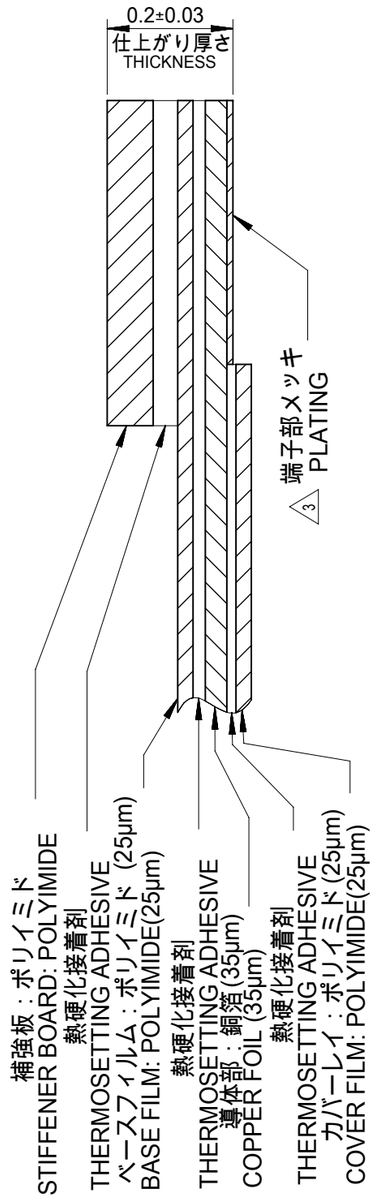

FPC 構成材料例

EXAMPLE OF FPC
COMPOSITION MATERIAL

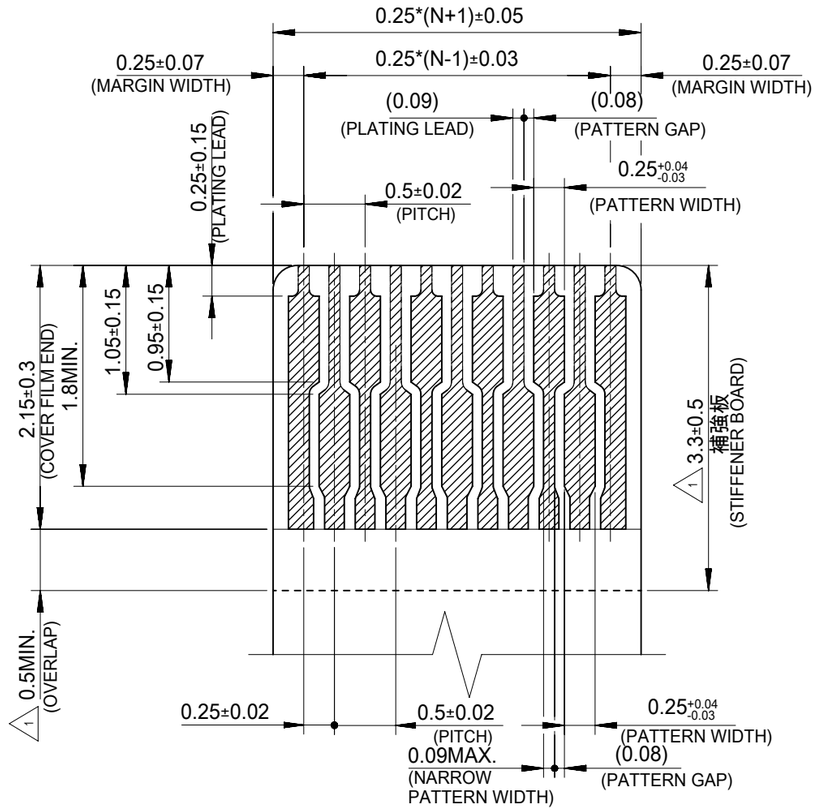

適合するFPC推奨寸法
APPLICABLE FPC
RECOMMENDED DIMENSION

(端子部仕上がり厚さ：0.2±0.03)
(THICKNESS: 0.2±0.03)

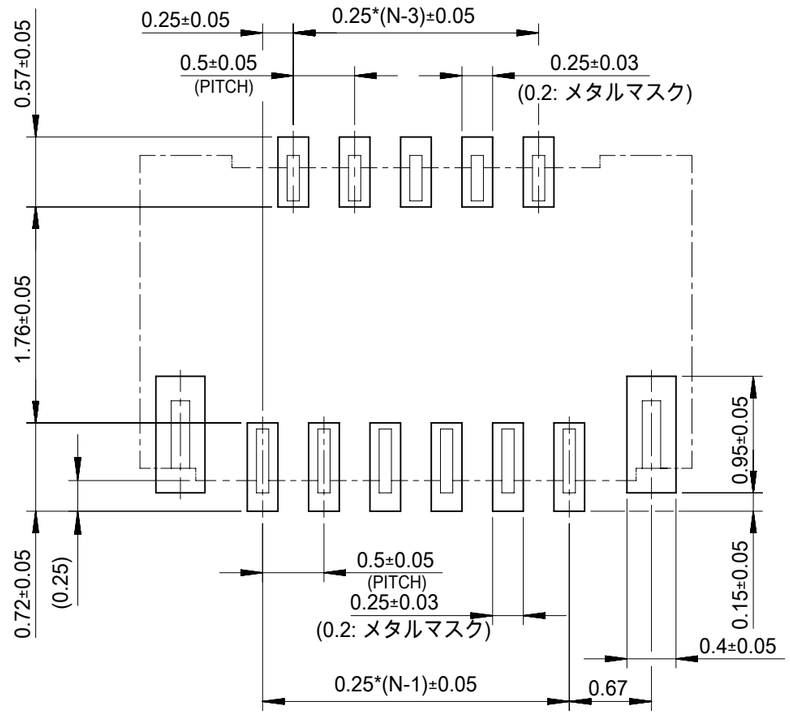

注記 NOTES

1 補強板長さが図面通り確保できない場合は、カバーレイと補強板のオーバーラップ寸法を0.5mm以上としてください
WHEN STIFFENER BOARD DIMENSION CAN NOT SECURE AS DRAWING, PLEASE GIVE THE OVERLAP SIZE OF COVER FILM AND STIFFENER BOARD AS 0.5mm MINIMUM

2 推奨ペースト厚 : 100μm
推奨マスク開口率 : 80%
RECOMMEND SCREEN THICKNESS : 100μm
RECOMMEND SCREEN OPEN RATIO : 80%

3 FPCパターンのメッキ仕様は
金メッキ：0.1μm 以上
下地ニッケルメッキ：2~6μm
FPC PATTERN PLATING
GOLD PLATING : 0.1μm MINIMUM
NICKEL UNDER PLATING : 2~6μm

4 FPC について(ABOUT FPC)
抜き方向は、導体側から補強板側を推奨します
補強板材質は、ポリイミドを推奨します
接着剤は熱硬化接着剤を推奨します
なお、接着剤の接点部への付着は導通不良の原因となりますので染み出しがないよう、お願いします
RECOMMENDED PUNCHER DIRECTION:
FROM CONDUCTOR SIDE TO STIFFENER BORAD SIDE
RECOMMENDED MATERIAL:
STIFFENER BOARD: POLYIMIDE
BONDING AGENT: THERMOSETTING AGENT
PLEASE PUT APPROPRIATE AMOUNT OF ADHESIVE ON THE CONTACT AREA BECAUSE THE EXTRA ADHESIVE MAY CAUSE THE DEFECT IN ELECTRICAL CONTINUITY

THIS DRAWING CONTAINS INFORMATION THAT IS PROPRIETARY TO MOLEX ELECTRONIC TECHNOLOGIES, LLC AND SHOULD NOT BE USED WITHOUT WRITTEN PERMISSION

DIMENSION UNITS	SCALE
mm	20:1

GENERAL TOLERANCES (UNLESS SPECIFIED)

ANGULAR TOL	±	1.0 °
4 PLACES	±	0.3
3 PLACES	±	0.3
2 PLACES	±	0.3
1 PLACE	±	0.3
0 PLACES	±	0.3

DRAFT WHERE APPLICABLE MUST REMAIN WITHIN DIMENSIONS

CURRENT REV DESC:

EC NO: 749229
DRWN: RAJAGN 2023/05/02
CHK'D: HSHIMOYAMA 2023/05/11
APPR: YNAITO 2023/05/11

INITIAL REVISION:
DRWN: MNIITA 2010/08/23
APPR: SHOSHIKAWA 2010/08/27

THIRD ANGLE PROJECTION | DRAWING: A3-SIZE | SERIES: 503300

molex

0.25 PITCH FPC CONN. E/O
HGT=1.2 UPR CONTACT TYPE LOW-HALOGEN

PRODUCT CUSTOMER DRAWING

DOCUMENT NUMBER	DOC TYPE	DOC PART	REVISION
SD-503300-001	PSD	001	F

MATERIAL NUMBER	CUSTOMER	SHEET NUMBER
SEE SHEET 1	GENERAL	2 OF 2

DOCUMENT STATUS	P1	RELEASE DATE	2023/05/11 10:55:07

FORMAT: master-tb-prod-A3
REVISION: J1
DATE: 2021/05/01

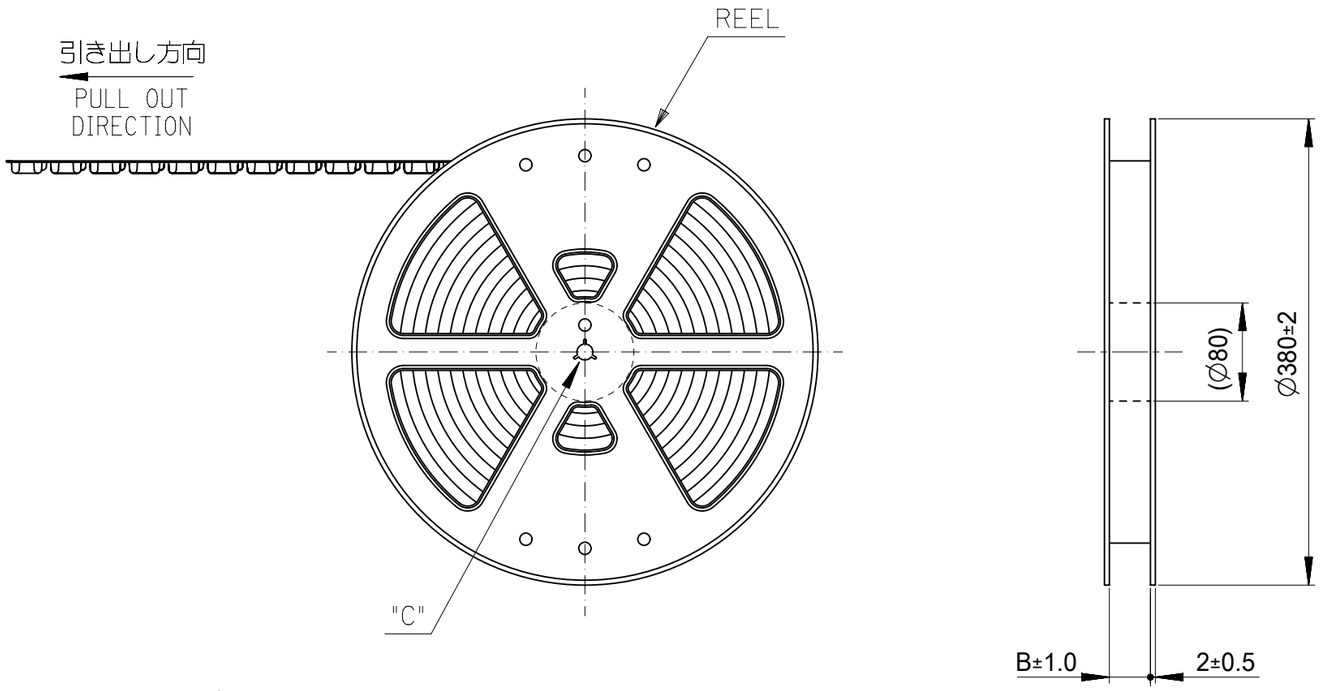

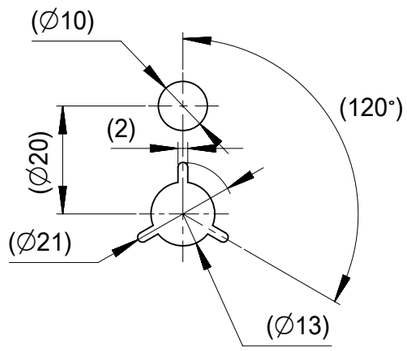

DETAIL "C"

注記 NOTES

1. 製品詳細寸法については図面 SD-503300-001 を参照下さい。
   RE DETAILED DIMENSION, SEE SD-503300-001
2. 梱包数量：3000 個 / リール
   NUMBER OF CONNECTORS : 3000 PCS/REEL
3. リードテープ長さ LEAD TAPE LENGTH

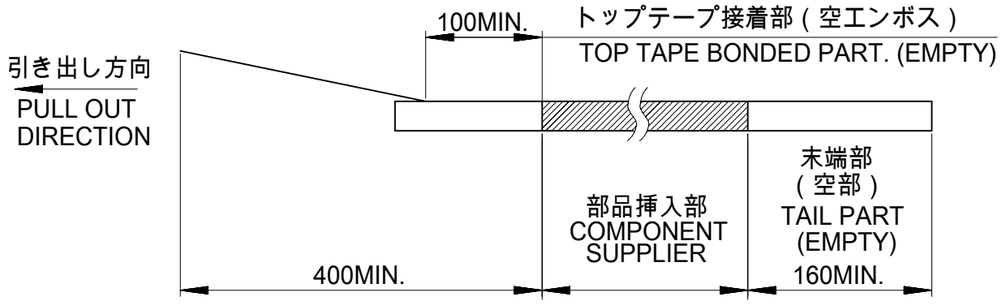

4. 材料 MATERIAL
   キャリアテープ (CARRIER TAPE) ：ポリスチレン (POLYSTYRENE)
   トップテープ (TOP TAPE) ：PET , PE , PEF
   リール (REEL) ：ポリスチレン (PS) <リサイクル材を含む>
   POLYSTYRENE (PS) <RECYCLE MATERIAL CONTAINED>
5. カバーテープの剥離強度については、 IEC60286-3 に準拠
   COVER TAPE PEEL FORCE IS DEFINED BY IEC60286-3.

GENERAL TOLERANCES (UNLESS SPECIFIED)	
10 UNDER	±0.2
10 OVER 30 UNDER	±0.25
30 OVER	±0.3
ANGULAR	±1 °
DRAFT WHERE APPLICABLE MUST REMAIN WITHIN DIMENSIONS	

CONNECTOR SERIES NO. 503300-**10

THIS DRAWING CONTAINS INFORMATION THAT IS PROPRIETARY TO MOLEX ELECTRONIC TECHNOLOGIES, LLC AND SHOULD NOT BE USED WITHOUT WRITTEN PERMISSION

DIMENSION UNITS	SCALE
mm	1:1

GENERAL TOLERANCES (UNLESS SPECIFIED)

ANGULAR TOL	±	1.0 °
4 PLACES	±	0.2
3 PLACES	±	0.25
2 PLACES	±	0.3
1 PLACE	±	
0 PLACES	±	

DRAFT WHERE APPLICABLE MUST REMAIN WITHIN DIMENSIONS

CURRENT REV DESC:

EC NO: 749229
DRWN: RAJAGN 2023/05/02
CHK'D: HSHIMOYAMA 2023/05/11
APPR: YNAITO 2023/05/11

INITIAL REVISION:
DRWN: MNIITA 2010/08/24
APPR: SHOSHIKAWA 2010/08/27

THIRD ANGLE PROJECTION | DRAWING A3-SIZE | SERIES 503300

molex

0.25MM FPC CONN. E/O
H=1.2 HSG ASSY UPR EMBOSSED TAPE PACKAGE

PRODUCT CUSTOMER DRAWING

DOCUMENT NUMBER	DOC TYPE	DOC PART	REVISION
SD-503300-002	PSD	001	D

MATERIAL NUMBER	CUSTOMER	SHEET NUMBER
	GENERAL	1 OF 3

DOCUMENT STATUS	P1	RELEASE DATE	2023/05/11	10:55:08

FORMAT: master_tb_mod-A3
REVISION: J1
DATE: 2021/05/01

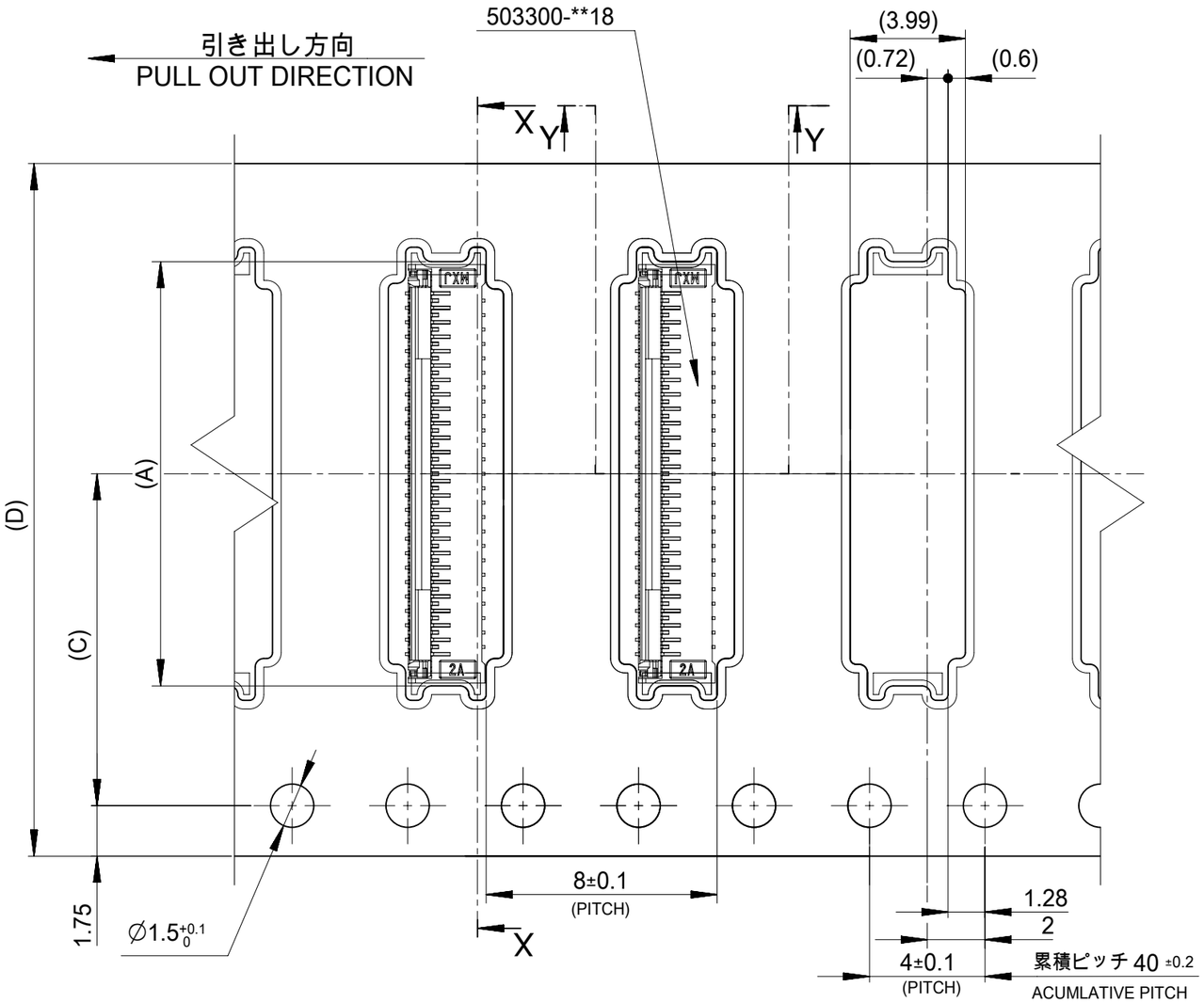

16, 24mm幅キャリアテープ

16, 24mm WIDTH CARRIER TAPE

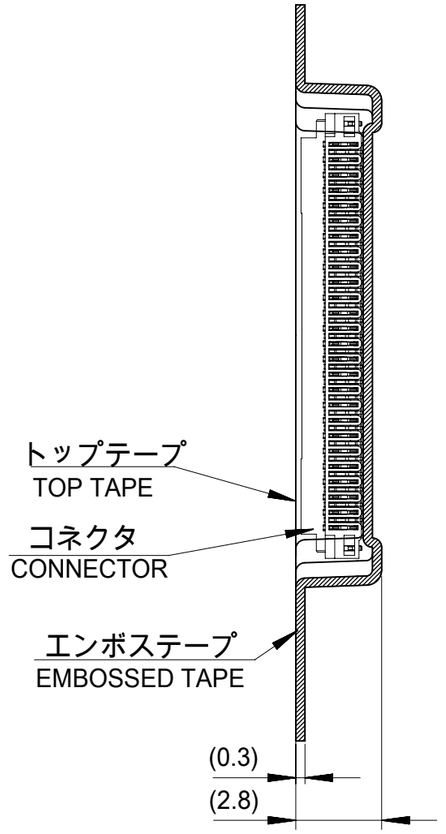

SECTION X-X

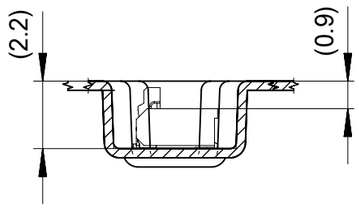

SECTION Y-Y

(D) キャリアテープ幅 CARRIER TAPE WIDTH	(C)	B	(A)	オーダー番号 ORDER NO.	極数 CIRCUITS
24	11.5	25.4	13.7	503300-4310	43
			13.2	503300-4110	41
			12.2	503300-3710	37
			10.7	503300-3110	31
			10.2	503300-2910	29
			8.2	503300-2110	21
16	7.5	17.4	7.2	503300-1710	17
	CONNECTOR SERIES NO.			503300-**10	

THIS DRAWING CONTAINS INFORMATION THAT IS PROPRIETARY TO MOLEX ELECTRONIC TECHNOLOGIES, LLC AND SHOULD NOT BE USED WITHOUT WRITTEN PERMISSION

GENERAL TOLERANCES (UNLESS SPECIFIED)	
10 UNDER	±0.2
10 OVER 30 UNDER	±0.25
30 OVER	±0.3
ANGULAR	±1 °

DRAFT WHERE APPLICABLE MUST REMAIN WITHIN DIMENSIONS

DIMENSION UNITS	SCALE
mm	1:1

GENERAL TOLERANCES (UNLESS SPECIFIED)

ANGULAR TOL	±	1.0 °
4 PLACES	±	0.2
3 PLACES	±	0.25
2 PLACES	±	0.3
1 PLACE	±	
0 PLACES	±	

DRAFT WHERE APPLICABLE MUST REMAIN WITHIN DIMENSIONS

CURRENT REV DESC:

EC NO: 749229
DRWN: RAJAGN 2023/05/02
CHK'D: HSHIMOYAMA 2023/05/11
APPR: YNAITO 2023/05/11

INITIAL REVISION:
DRWN: MNIITA 2010/08/24
APPR: SHOSHIKAWA 2010/08/27

THIRD ANGLE PROJECTION | DRAWING A3-SIZE | SERIES 503300

molex

0.25MM FPC CONN. E/O
H=1.2 HSG ASSY UPR EMBOSSED TAPE PACKAGE

PRODUCT CUSTOMER DRAWING

DOCUMENT NUMBER	DOC TYPE	DOC PART	REVISION
SD-503300-002	PSD	001	D

MATERIAL NUMBER	CUSTOMER	SHEET NUMBER
	GENERAL	2 OF 3

DOCUMENT STATUS	P1	RELEASE DATE	2023/05/11	10:55:08

FORMAT: master-tb-mod-A3
REVISION: J1
DATE: 2021/05/01

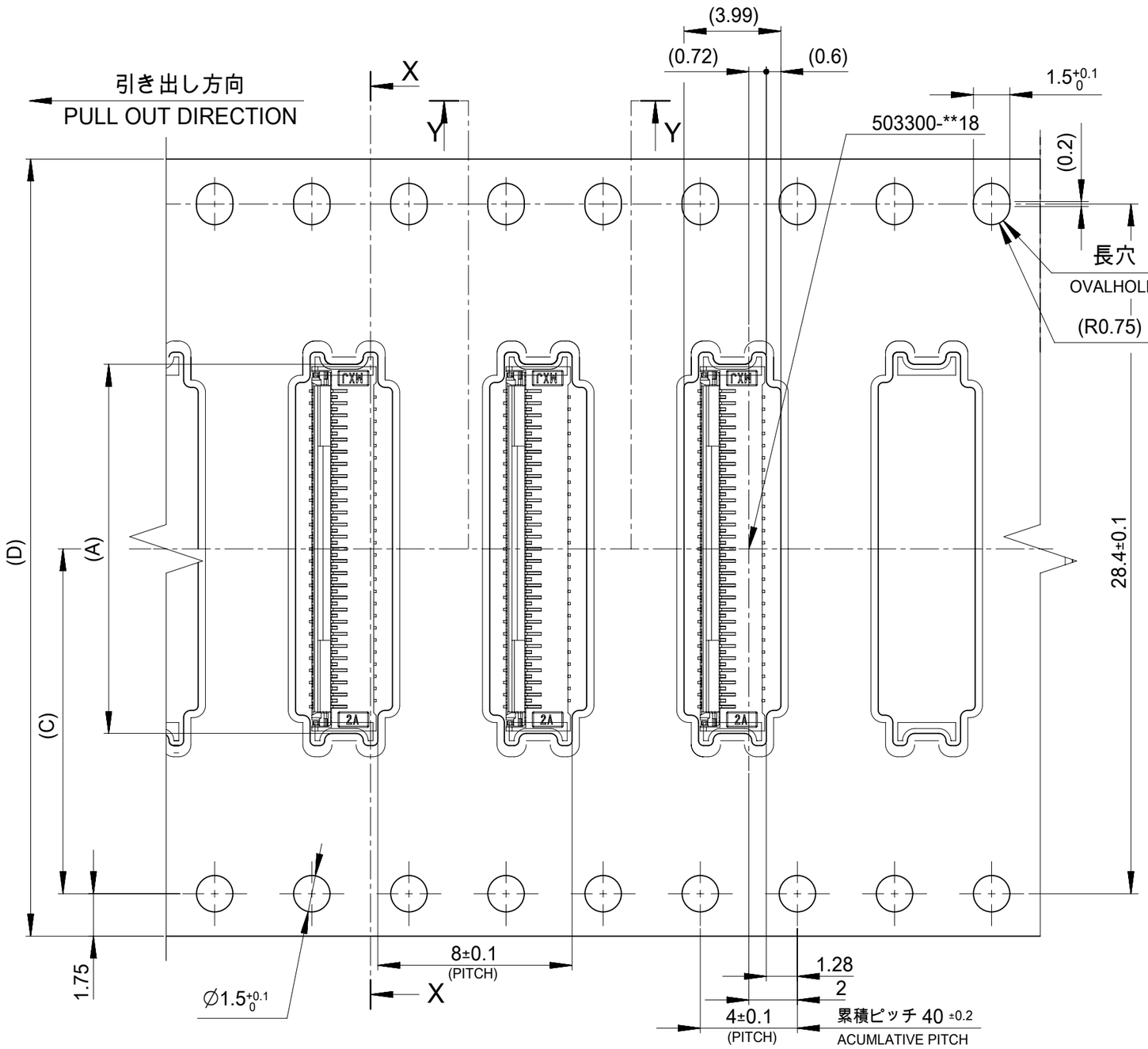

32mm幅キャリアテープ

32mm WIDTH CARRIER TAPE

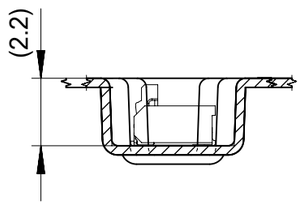

SECTION Y-Y

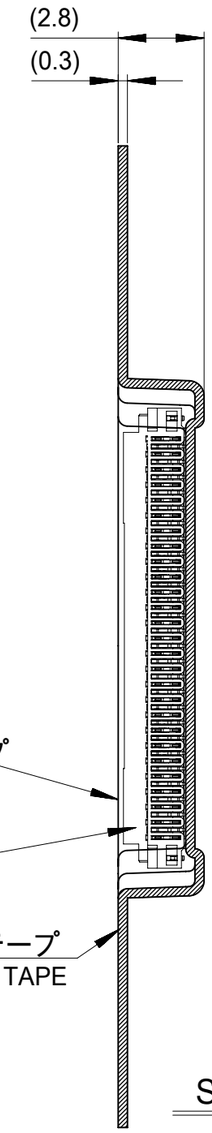

SECTION X-X

32	14.2	33.4	15.2	503300-5310	53
(D) キャリアテープ幅 CARRIER TAPE WIDTH	(C)	B	(A)	製品番号 MATERIAL NO.	極数 CKT.
	MODEL NO.			503300-**10	

THIS DRAWING CONTAINS INFORMATION THAT IS PROPRIETARY TO MOLEX ELECTRONIC TECHNOLOGIES, LLC AND SHOULD NOT BE USED WITHOUT WRITTEN PERMISSION

GENERAL TOLERANCES (UNLESS SPECIFIED)	
10 UNDER	±0.2
10 OVER 30 UNDER	±0.25
30 OVER	±0.3
ANGULAR	±1 °
DRAFT WHERE APPLICABLE MUST REMAIN WITHIN DIMENSIONS	

DIMENSION UNITS	SCALE
mm	1:1

GENERAL TOLERANCES (UNLESS SPECIFIED)	
ANGULAR TOL	± 1.0 °
4 PLACES	± 0.2
3 PLACES	± 0.25
2 PLACES	± 0.3
1 PLACE	±
0 PLACES	±

DRAFT WHERE APPLICABLE MUST REMAIN WITHIN DIMENSIONS

CURRENT REV DESC:

EC NO: 749229
DRWN: RAJAGN 2023/05/02
CHK'D: HSHIMOYAMA 2023/05/11
APPR: YNAITO 2023/05/11

INITIAL REVISION:
DRWN: MNIITA 2010/08/24
APPR: SHOSHIKAWA 2010/08/27

molex

0.25MM FPC CONN. E/O
H=1.2 HSG ASSY UPR EMBOSSED TAPE PACKAGE

PRODUCT CUSTOMER DRAWING

DOCUMENT NUMBER	DOC TYPE	DOC PART	REVISION
SD-503300-002	PSD	001	D

THIRD ANGLE PROJECTION	DRAWING	SERIES	MATERIAL NUMBER	CUSTOMER	SHEET NUMBER
	A3-SIZE	503300		GENERAL	3 OF 3

DOCUMENT STATUS	P1	RELEASE DATE	2023/05/11 10:55:08

FORMAT: master_borders-A3
REVISION: J1
DATE: 2021/05/0

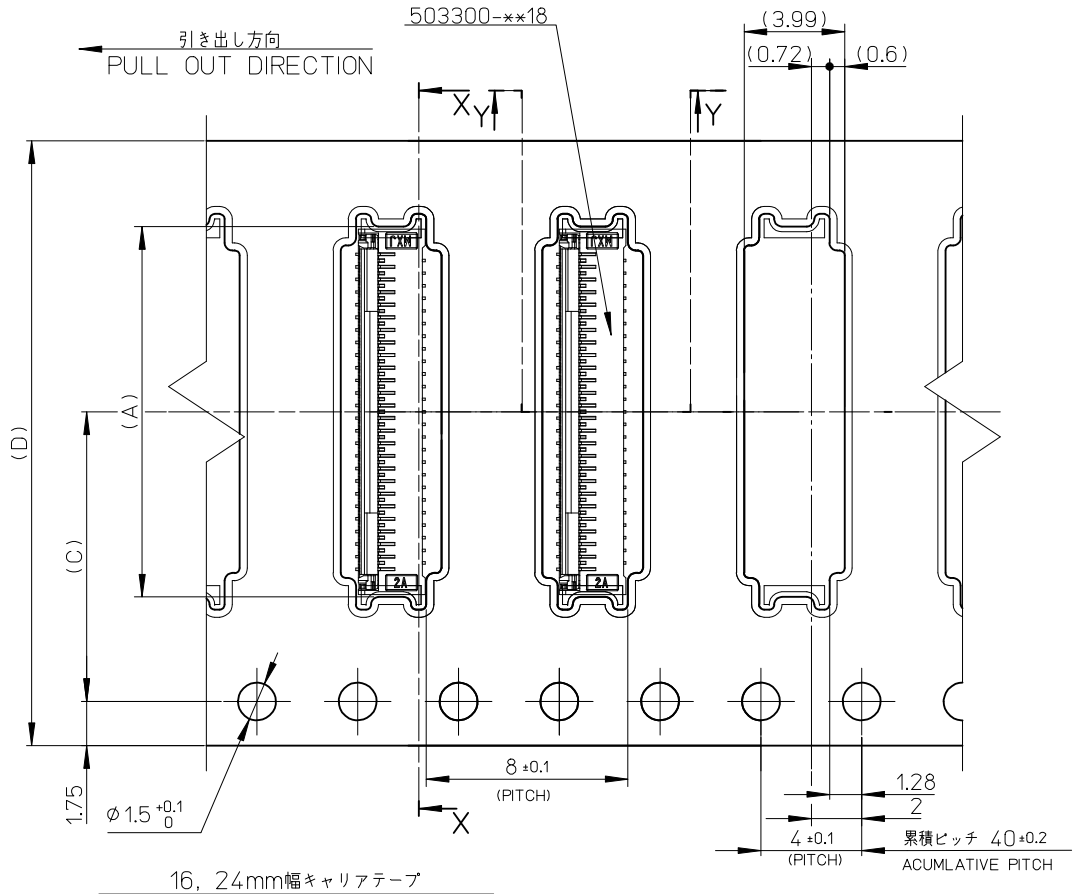

16, 24mm幅キャリアテープ
16, 24mm WIDTH CARRIER TAPE

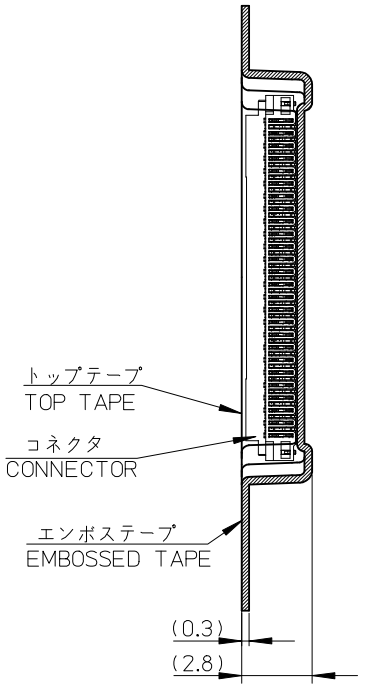

SECTION X-X

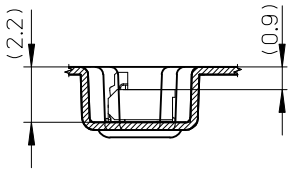

SECTION Y-Y

(D) キャリアテープ幅 CARRIER TAPE WIDTH	(C)	B	(A)	オーダー番号 ORDER NO.	極数 CIRCUITS
24	11.5	25.4	13.7	503300-4310	43
			13.2	503300-4110	41
			12.2	503300-3710	37
			10.7	503300-3110	31
			10.2	503300-2910	29
			8.2	503300-2110	21
CONNECTOR SERIES NO.				503300-**10	

REVISED
EC NO: J2014-1201 2014/01/29
DRWN:TMORISHITA 2014/01/29
CH'KD:KTAKAHASHI 2014/02/07
APPR:YNOGAWA
DESCRIPTION
REV

GENERAL TOLERANCES (UNLESS SPECIFIED)

10 UNDER	±0.2
10 OVER 30 UNDER	±0.25
30 OVER	±0.3
ANGULAR	±1 °

DRAFT WHERE APPLICABLE MUST REMAIN WITHIN DIMENSIONS

DIMENSION STYLE: MM ONLY
SCALE: ---
DESIGN UNITS: METRIC
THIRD ANGLE PROJECTION

DRAWN BY: MNIITA DATE: 2010/08/24
CHECKED BY: SHOSHIKAWA DATE: 2010/08/24
APPROVED BY: SHOSHIKAWA DATE: 2010/08/27
MATERIAL NO.: SEE CHART

TITLE
0.25MM FPC CONN. E/O
H=1.2 HSG ASSY UPR
EMBOSSED TAPE PACKAGE

molex

DOCUMENT NO.: SD-503300-002
SHEET NO.: 2 OF 3
SIZE: A3

THIS DRAWING CONTAINS INFORMATION THAT IS PROPRIETARY TO MOLEX INCORPORATED AND SHOULD NOT BE USED WITHOUT WRITTEN PERMISSION

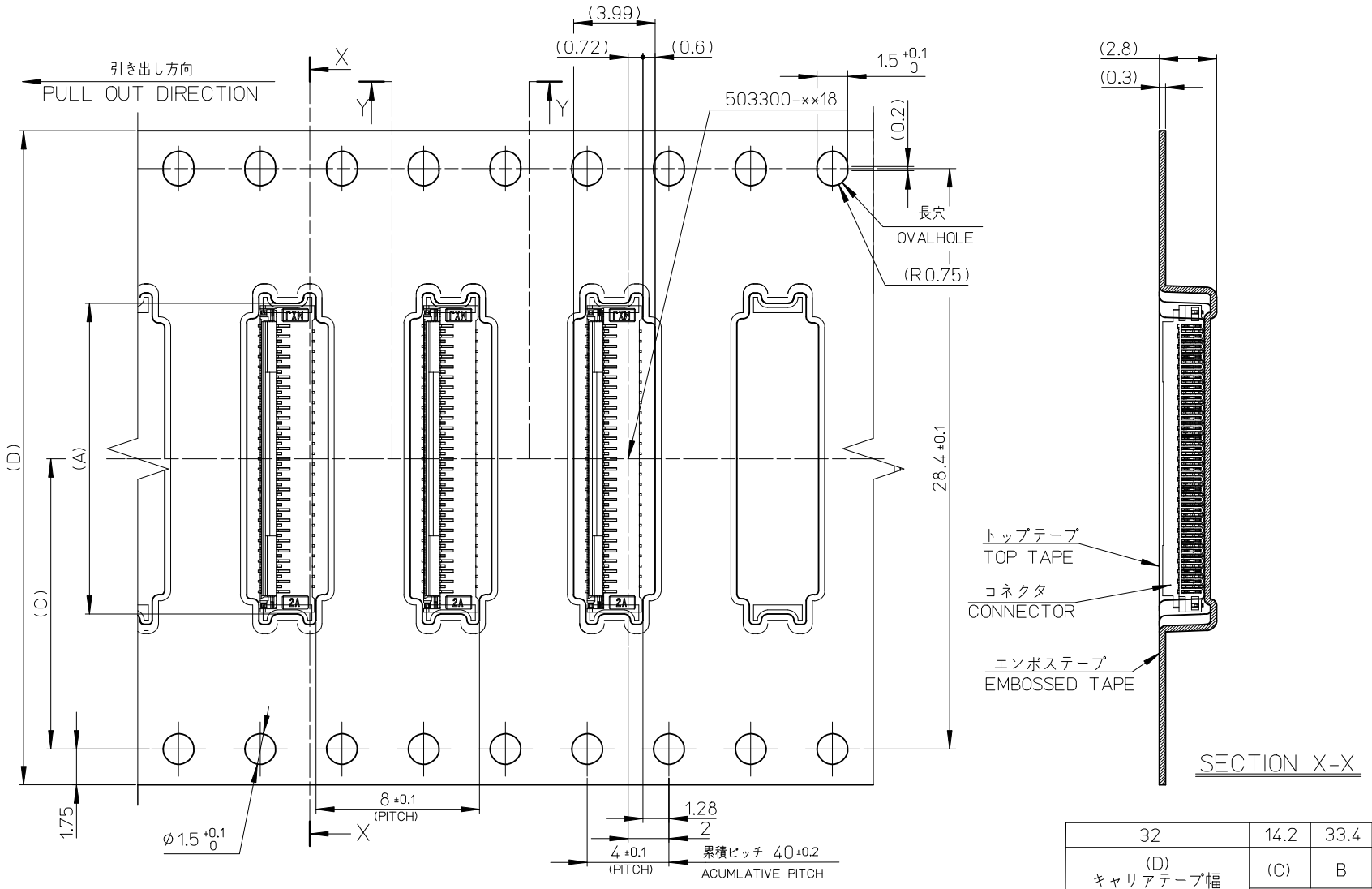

32mm幅キャリアテープ

32mm WIDTH CARRIER TAPE

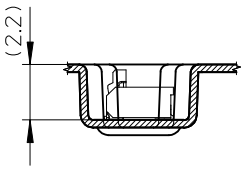

SECTION Y-Y

32	14.2	33.4	15.2	503300-5310	53
(D) キャリアテープ幅 CARRIER TAPE WIDTH	(C)	B	(A)	製品番号 MATERIAL NO.	極数 CKT.
	MODEL NO.			503300-**10	

REVISED
EC NO: J2014-1201 2014/01/29
DRWN:TMORISHITA 2014/01/29
CH'KD:KTAKAHASHI 2014/02/07
APPR:YNOGAWA
DESCRIPTION
REV

GENERAL TOLERANCES (UNLESS SPECIFIED)

10 UNDER	±0.2
10 OVER 30 UNDER	±0.25
30 OVER	±0.3
ANGULAR	±1 °

DRAFT WHERE APPLICABLE MUST REMAIN WITHIN DIMENSIONS

DIMENSION STYLE	MM ONLY
SCALE	1:1
DESIGN UNITS	METRIC
	THIRD ANGLE PROJECTION
DRAWN BY / DATE	MNIITA 2012/01/05
CHECKED BY / DATE	SHOSHIKAWA 2012/01/05
APPROVED BY / DATE	SHOSHIKAWA 2012/01/05
MATERIAL NO.	SEE CHART
TITLE	0.25MM FPC CONN. E/O H=1.2 HSG ASSY UPR EMBOSSED TAPE PACKAGE
DOCUMENT NO.	SD-503300-002
SHEET NO.	3 OF 3
SIZE	A3

molex

THIS DRAWING CONTAINS INFORMATION THAT IS PROPRIETARY TO MOLEX INCORPORATED AND SHOULD NOT BE USED WITHOUT WRITTEN PERMISSION