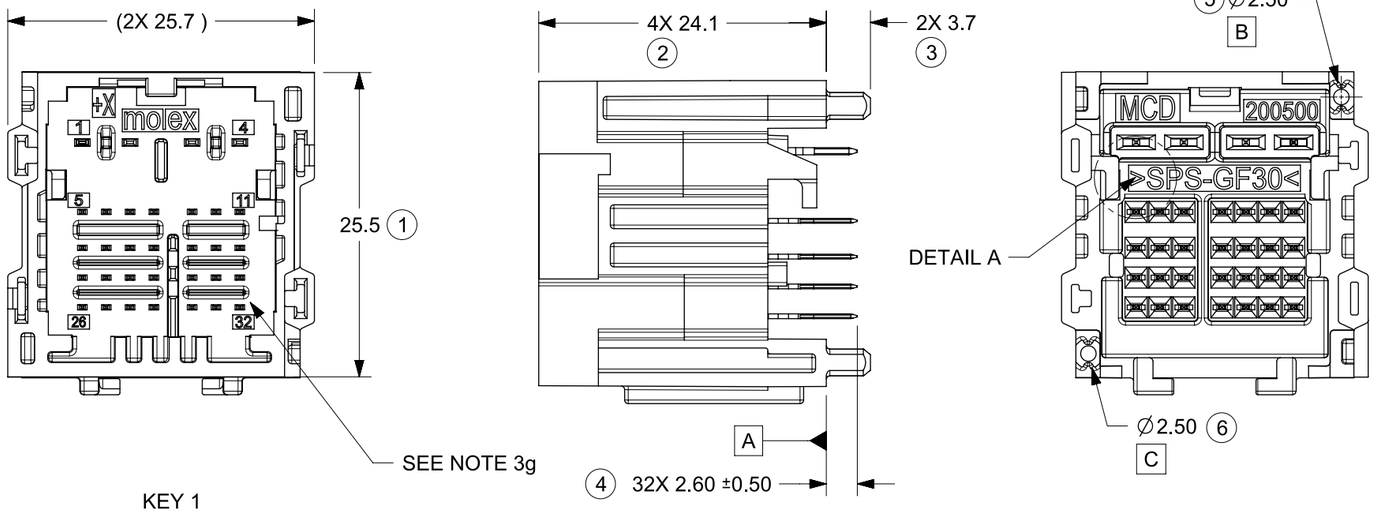

KEY 1
PART NO. 2005010321

PART NUMBER TUBE PACKAGING 2005058100	PART NUMBER TRAY PACKAGING 2005053013-PK	KEY	COLOR	TERMINAL QUANTITIES 0.5mm	TERMINAL QUANTITIES 1.2mm
2005010321	2005011321	1	BLACK	28	4
2005010322	2005011322	2	BLUE		
2005010323	2005011323	3	DARK GRAY		
2005010324	2005011324	4	PURPLE		
D4 3065840321	3065841321	1	BLACK	28	4
D4 3065840322	3065841322	2	BLUE		
D3 3065840323	3065841323	3	DARK GRAY		
D4 3065840324	3065841324	4	PURPLE		

FOUR (4) KEYS AVAILABLE
SEE INTERFACE DRAWING
SD-160028-002 FOR DEFINITION

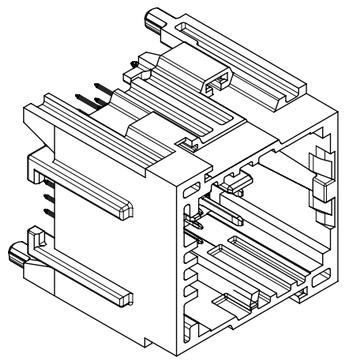

NOTES: VALID UNLESS OTHERWISE SPECIFIED

1. GENERAL:
a. APPLICATION SPECIFICATION 2005060000-AS
b. PRODUCT SPECIFICATION 2005060001-PS
D2 CLASSIFICATIONS T2V1S1 TO GMW 3191 2012
DEGREE OF PROTECTION IP40 TO ISO 20653 WITH MOLEX MATING CONNECTOR
c. PACKAGING SPECIFICATION PER MOLEX DRAWING

2. DESIGN - MATERIALS:
a. HOUSING: SPS 30% GF
D2 b. BLADE TERMINALS:
1. 0.5MM BLADES
BASE MATERIAL: COPPER ALLOY
UNDERPLATE: OVERALL NICKEL
OVERPLATE: OVERALL TIN
2. 1.2MM BLADES
BASE MATERIAL: COPPER ALLOY
UNDERPLATE: OVERALL NICKEL
OVERPLATE: OVERALL TIN

3. DESIGN - GEOMETRY:
a. ALL GRAPHIC DATA IS BASIC (NO TOLERANCE) AND MUST BE TAKEN FROM THE DATA FILE AT ITS LATEST REVISION.
b. PRODUCT DESIGN MODEL NUMBER 2005010320
c. GEOMETRIC DIMENSIONS AND TOLERANCES PER ASME Y14.5-2009
d. EDGES AND UNDIMENSIONED DETAILS PER ISO13715
e. CORNERS SHOWN AS SHARP TO BE R 0.4 MAX.
f. LETTERING SHALL BE MAX POSSIBLE FOR READABILITY. THIS INCLUDES RECYCLING CODE, CAVITY ID, VENDOR IDENTIFICATION, AND CUSTOMER MATERIAL NUMBER.
g. FOR BAY/POCKET DEFINITION SEE MOLEX INTERFACE DRAWING SD-160028-002
h. MATING HARNESS CONNECTORS MOLEX PN:
1600280011 (KEY 1)
1600280012 (KEY 2)
1600280013 (KEY 3)
1600280014 (KEY 4)

4. DESIGN - MANUFACTURING:
a. VISUAL DEFECTS SHALL MEET COSMETIC STANDARD PS-45499-002 (CLASS B)
b. REFLOW SOLDERABILITY PER SMES-152

INSPECTION BALLOON NUMBER LOG
PER DRAWING REVISION: D1
LAST BALLOON NUMBER: 11B
ADDED BALLOON NUMBER: NONE
DELETED BALLOON NUMBER: NONE

SEE SHEET 2	
REVISION	DESCRIPTION

THIS DRAWING CONTAINS INFORMATION THAT IS PROPRIETARY TO MOLEX ELECTRONIC TECHNOLOGIES, LLC AND SHOULD NOT BE USED WITHOUT WRITTEN PERMISSION

FUNCTIONAL SYMBOLS: FA = 0, FC = 0, FP = 0
DIVISIONAL SYMBOLS

DIMENSION UNITS	SCALE
MM	2:1

GENERAL TOLERANCES (UNLESS SPECIFIED)

ANGULAR TOL	± °
4 PLACES	±
3 PLACES	±
2 PLACES	± 0.130
1 PLACE	± 0.25
0 PLACES	±

DRAFT WHERE APPLICABLE MUST REMAIN WITHIN DIMENSIONS

CURRENT REV DESC: SEE REVISION TABLE

STATUS: Production
DRWN: Alan Nunez 2026-08-11
CHK'D: Alan Nunez 2026-08-11
APPR: ENRIQUE CEDEÑO 2026-08-12

THIRD ANGLE PROJECTION | DRAWING: B-SIZE | SERIES: 200501

molex

STAK50H MOD HDR 32 VERT SOLDER

PRODUCT CUSTOMER DRAWING

DOCUMENT NUMBER	DOC TYPE	DOC PART	REVISION
2005011320SD	PSD	000	D4

MATERIAL NUMBER	CUSTOMER	SHEET NUMBER
SEE TABLE		1 OF 2

FORMAT: TC-tb-prod-B
REVISION: B
DATE: 2022/08/01

RECOMMENDED MODULE OPENING
TO PASS ISO 20653 IP40

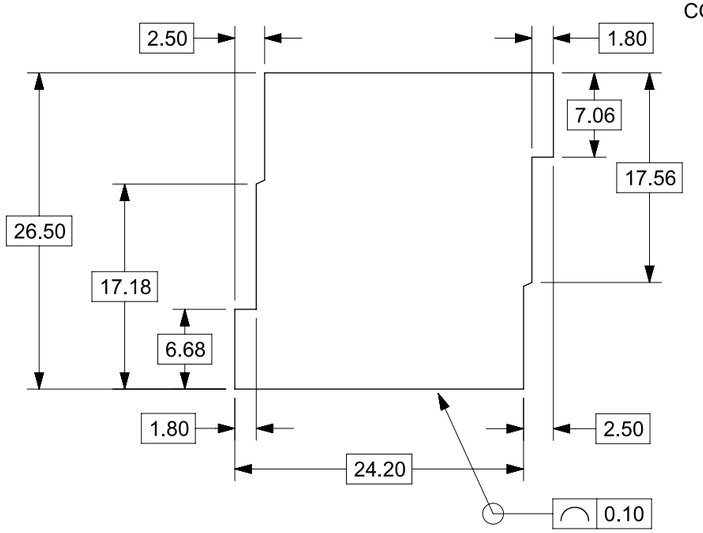

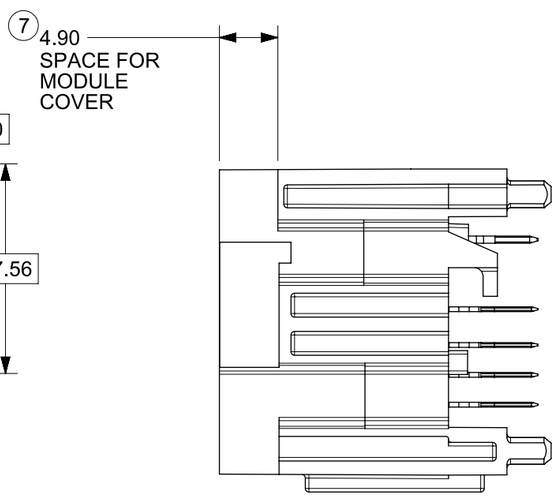



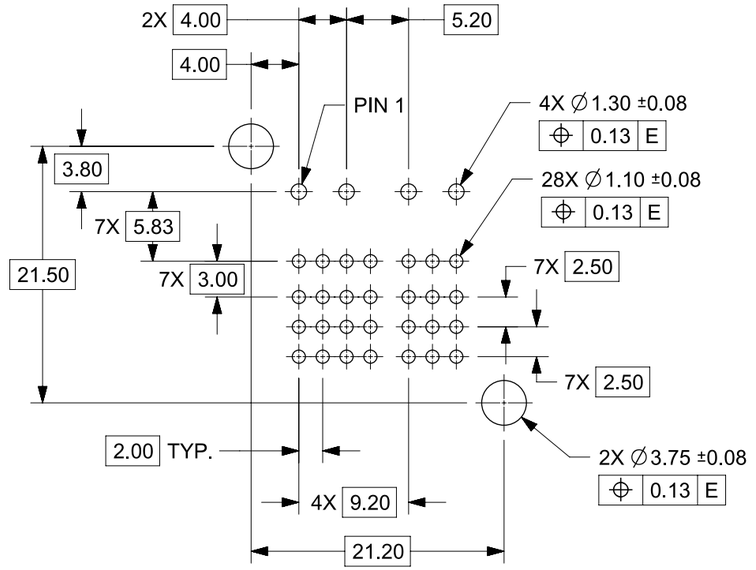

PCB LAYOUT
FOR REFERENCE

FOR SINGLE-BAY HEADER ONLY
FOR MULTIPLE-BAY STACKED HEADER SEE DRAWING 2005050000

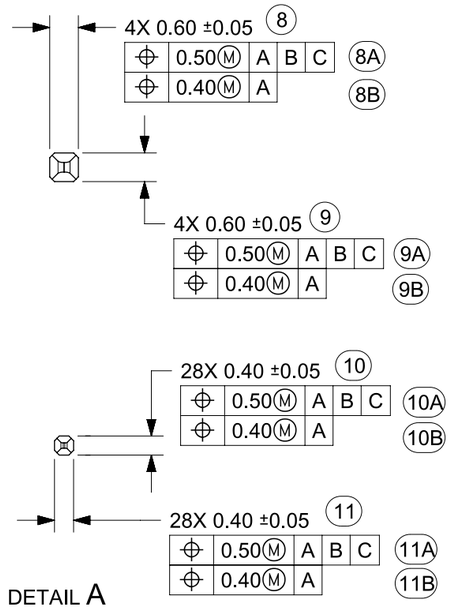

DETAIL A
SCALE 8:1

REVISION	DESCRIPTION
D4	ADDED 306584 SERIES PN FOR KEYS 1, 2, 4
D3	ADDED NEW PN: 3065840323, 3065841323
D2	NOTES 1.B AND 2.B UPDATED
D1	TITLE BLOCK UPDATE
D	UPDATED THE PACKAGING DETAILS
C1	ADDED PCB HOLE DIMENSIONAL & POSITIONAL TOLERANCE 10-JUNE-2020 YPENG47 ECN:639277

THIS DRAWING CONTAINS INFORMATION THAT IS PROPRIETARY TO MOLEX ELECTRONIC TECHNOLOGIES, LLC AND SHOULD NOT BE USED WITHOUT WRITTEN PERMISSION

FUNCTIONAL SYMBOLS
FA = 0
FC = 0
FP = 0

DIVISIONAL SYMBOLS

DIMENSION UNITS: MM
SCALE: 1:1

GENERAL TOLERANCES (UNLESS SPECIFIED)

ANGULAR TOL	± '
4 PLACES	±
3 PLACES	±
2 PLACES	± 0.130
1 PLACE	± 0.25
0 PLACES	±

DRAFT WHERE APPLICABLE MUST REMAIN WITHIN DIMENSIONS

CURRENT REV DESC: SEE REVISION TABLE

STATUS: Production
DRWN: Alan Nunez 2026-08-11
CHK'D: Alan Nunez 2026-08-11
APPR: ENRIQUE CEDEÑO 2026-08-12

THIRD ANGLE PROJECTION

molex

STAK50H MOD HDR 32 VERT SOLDER

PRODUCT CUSTOMER DRAWING

DRAWING	SERIES	MATERIAL NUMBER	CUSTOMER	SHEET NUMBER
B-SIZE	200501	SEE TABLE		2 OF 2

DOCUMENT NUMBER	DOC TYPE	DOC PART	REVISION
2005011320SD	PSD	000	D4

FORMAT: TC-db-prod-B
REVISION: B
DATE: 2022/08/01