GD3160

Advanced IGBT/SiC gate driver

Rev. 16.0 — 31 August 2026 **Product data sheet**



1 General description

The GD3160 is an advanced, single-channel gate driver for IGBTs and SiC power devices. Integrated Galvanic isolation and low on-resistance drive transistors provide high charging and discharging current, low dynamic saturation voltage and rail-to-rail gate voltage control.

Current and temperature sense minimizes IGBT/SiC stress during faults. Accurate and configurable undervoltage lockout (UVLO) provides protection while ensuring sufficient gate-drive voltage headroom.

The GD3160 autonomously manages severe faults and reports faults and status via INTB and/or INTA pins and an SPI interface. It is capable of directly driving gates of most IGBTs and SiC MOSFETs. Self test, control, and protection functions are included for design of high-reliability systems (ASIL C/D). The GD3160 meets the stringent requirements of automotive applications and is fully AEC-Q100 grade 1 qualified.

2 Features and benefits

This section summarizes the key features, safety features, and regulatory approvals for the GD3160.

2.1 Key features

- Integrated Galvanic signal isolation (up to 8 kV)
- High gate current integrated: 15 A source/sink capable
- SPI interface for safety monitoring, configuration, and diagnostic reporting
- Supports high switching frequencies: PWM up to 100 kHz
- Fail-safe state management from LV and HV domain for user-selectable safe state
- Programmable gate voltage regulator
- Temperature sense compatible with diode-based temperature sensors, NTC and PTC thermistors
- Configurable desaturation and current sense optimized for protecting SiC and IGBTs
- Integrated soft shutdown, two-level turn-off, optimized for unique gate drive requirements of SiC
- Real-time VCE and VGE reporting via INTA pin
- Integrated ADC for monitoring parameters from HV domain
- CMTI > 100 V/ns
- Compatible with 200 to 1700 V IGBT/SiC, power range > 125 kW
- Operating temperature range −40 to 125 °C
- Available in 5.0 or 3.3 V logic interface variants
- Small package footprint (10 mm x 11 mm) 32-pin SOIC

2.2 Safety features

- Certified compliant with ISO 26262, supporting ASIL D level functional safety
- Error checking of SPI and configuration data with 8-bit CRC
- Autonomously manages severe faults and reports status via configurable INTB and/or INTA pins, and SPI interface
- Current, DESAT, and temperature sense inputs and ADC reporting for IGBT/SiC monitoring and protection
- Interrupt pins (INTA and INTB) for fast response to faults
- Built-in self-check of all analog and digital circuits
- Continuous watchdog of communications across isolation barrier
- dead time enforcement
- Over- and undervoltage supervision of all power supplies on both low- and high-voltage sides
- Dedicated fail-safe state management pins on both low- and high-voltage sides
- VGE real-time cycle-by-cycle monitoring

2.3 Safety and regulatory approvals

- Reinforced isolation per DIN V VDE V 0884-10
- Withstand 5000 V rms (1 minute) isolation per UL 1577
- AEC-Q100 grade 1 automotive qualified

All information provided in this document is subject to legal disclaimers.

© 2026 NXP B.V. All rights reserved.

3 Simplified application diagram

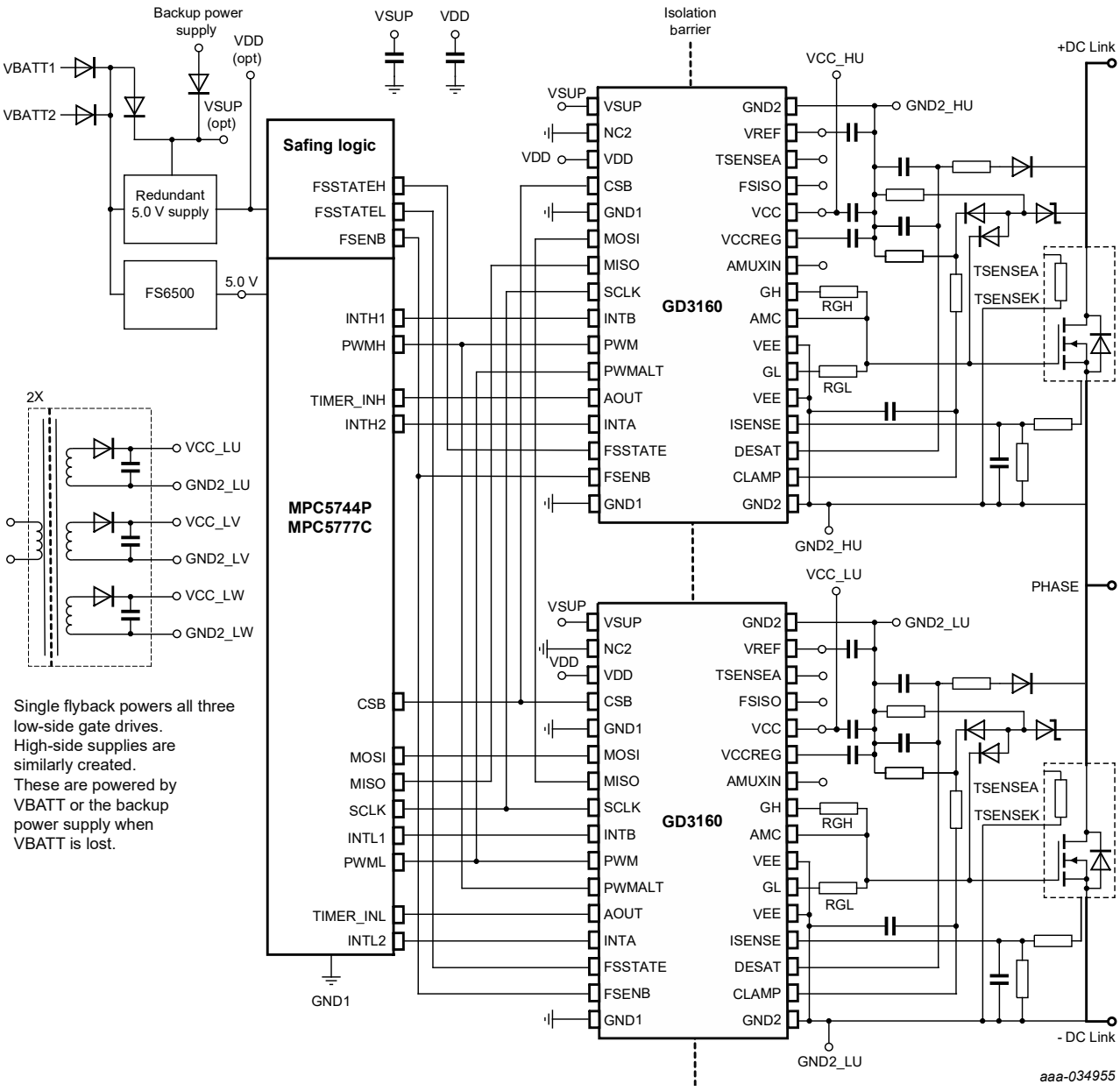

Figure 1. Simplified application diagram

All information provided in this document is subject to legal disclaimers.

© 2026 NXP B.V. All rights reserved.

4 Applications

- SiC gate driver
- IGBT gate driver
- DC/DC power converter
- Automotive traction inverter

All information provided in this document is subject to legal disclaimers.

© 2026 NXP B.V. All rights reserved.

5 Ordering information

Table 1. Orderable part variations

Part number [1]	VDD	External clearance and creepage distance [2]	Material (isolation) group [3]	FSISO option (Gate state when FSISO is activated)	Temperature (T_J)	Package
MGD3160AM515EK	5.0 V	> 7.72 mm	II	Gate ON	−40 °C to 150 °C	32-pin wide body SOIC, 0.65 mm pitch
MGD3160AM518EK	5.0 V	> 8.0 mm	I	Gate ON		
MGD3160AM535EK	5.0 V	> 7.72 mm	II	Gate 3-STATE		
MGD3160AM538EK	5.0 V	> 8.0 mm	I	Gate 3-STATE		
MGD3160AM315EK	3.3 V	> 7.72 mm	II	Gate ON		
MGD3160AM318EK	3.3 V	> 8.0 mm	I	Gate ON		
MGD3160AM335EK	3.3 V	> 7.72 mm	II	Gate 3-STATE		
MGD3160AM338EK	3.3 V	> 8.0 mm	I	Gate 3-STATE		

[1] To order parts in tape and reel, add the R2 suffix to the part number. To order parts in tray packing, add the T suffix to the part number.
[2] Per IEC 60950-1 Tables 2K and 2N
[3] Per IEC 60664-1

All information provided in this document is subject to legal disclaimers.

© 2026 NXP B.V. All rights reserved.

6 Internal block diagram

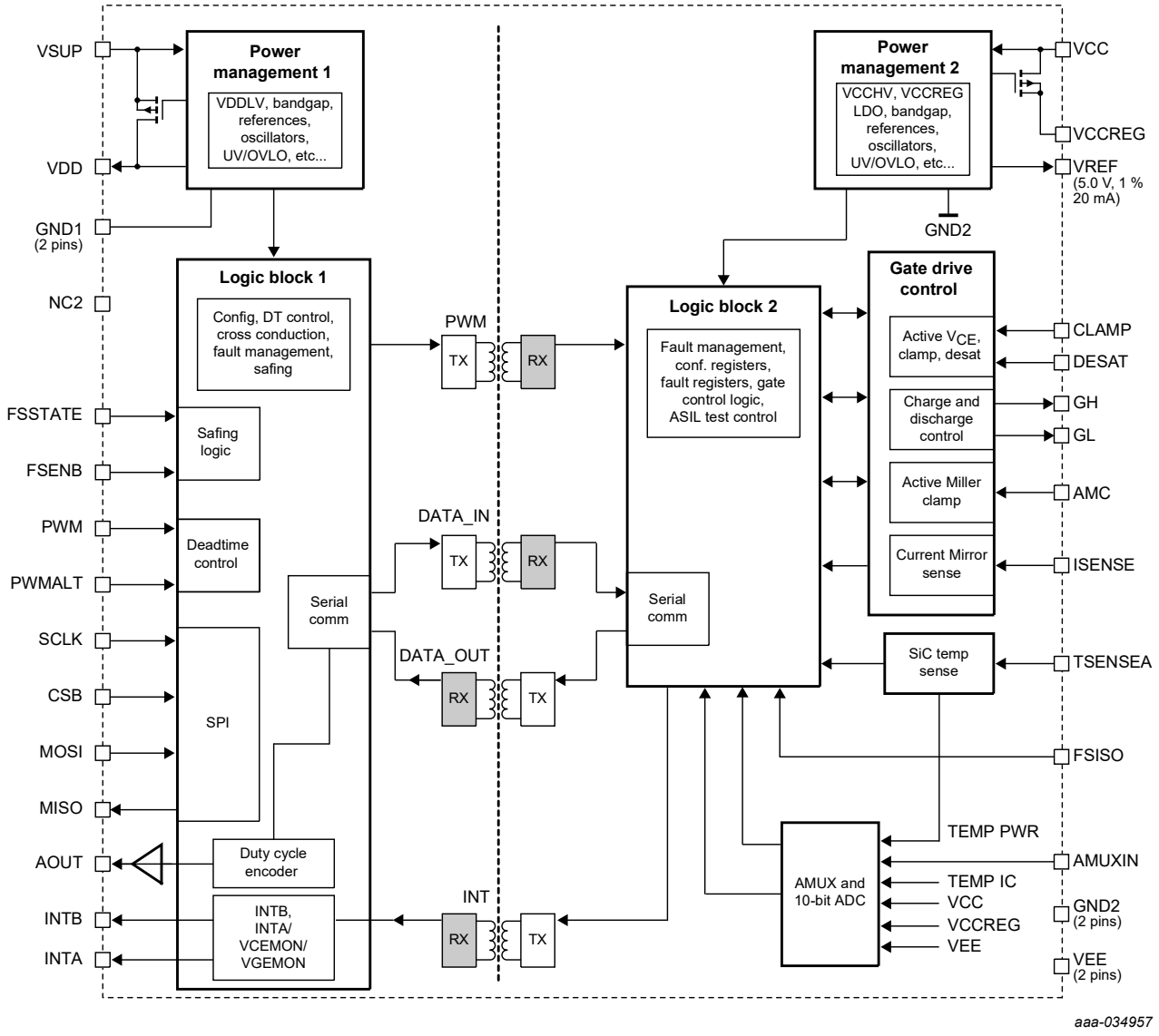

Figure 2. Internal block diagram

All information provided in this document is subject to legal disclaimers.

© 2026 NXP B.V. All rights reserved.

7 Pinning information

7.1 Pinning

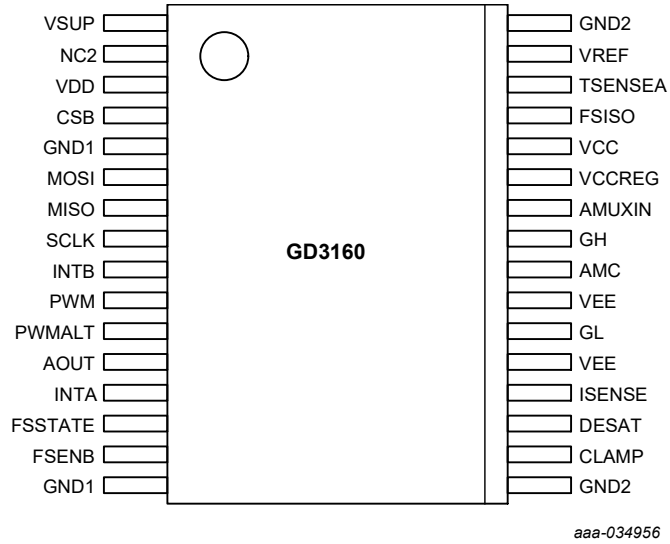

Figure 3. Pinout diagram

7.2 Pin description

Table 2. Pin definitions

Pin number	Pin name	Pin type	Definition	Comments
Pins 1 to 16 (low-voltage, non-isolated pins)				
1	VSUP	Input/power	Primary power supply for non-isolated low-voltage (LV) domain.	Main supply input is compatible with 12 V automotive battery range/transients, referenced to GND1. VSUP may either be (1) driven by 12V, or (2) tied to VDD and powered by an external, post-regulated 5 V supply.
2	NC2	No connect	No connection.	NC2 must be connected to GND1.
3	VDD	Input-output/power	Power supply for non-isolated low-voltage (LV) logic.	Main supply for logic on LV domain, referenced to GND1. VDD may either be (1) regulated internally to 3.3 V or 5.0 V from VSUP, or (2) tied to VSUP and powered by an external, post-regulated 5 V supply.
4	CSB	Input/digital	SPI chip select.	Active low CSB activates SPI link and framing.
5, 16	GND1	Ground 1	Ground for non-isolated (LV) domain power and logic.	Redundant GND1 pins provide ground reference for all non-isolated low-voltage (LV) domain signals. Isolated from all circuitry referenced to GND2.
6	MOSI	Input/digital	SPI MOSI pin.	Input data for GD3160 SPI. MOSI data latches on rising edge of SCLK, MSB first. Internal passive pulldown to GND1.
7	MISO	Output/digital	SPI MISO pin.	Data output for GD3160 SPI. GD3160 outputs MISO on falling edge of SCLK, MSB first.
8	SCLK	Input/digital	SPI clock.	GD3160 acknowledges SPI clock only when CSB is low. Internal passive pulldown to GND1.
9	INTB	Output/digital	Interrupt/Fault status output.	INTB reports fault with active low (logic 0 reports fault). Internal passive pullup to VDD.
10	PWM	Input/digital	PWM control command for gate output.	Logic high turns on power device gate. PWM pin is ignored during fail-safe, configuration, BIST, reset,

All information provided in this document is subject to legal disclaimers.

© 2026 NXP B.V. All rights reserved.

Table 2. Pin definitions*...continued*

Pin number	Pin name	Pin type	Definition	Comments
				and most fault modes. Internal passive pull down to GND1.
11	PWMALT	Input/digital	Complementary PWM command for gate output.	Complementary PWMALT enforces dead time constraint and prevents accidental shoot-through condition. Connect to GND1 if unused. Internal passive pull up to VDD.
12	AOUT	Output/analog	Duty-cycle encoded output of isolated ADC.	5.0 V, 3.9 kHz (or multiplexed with 5.6 kHz) readout is configurable by SPI. Pin left open if unused.
13	INTA	Output/digital	Interrupt/fault status/monitor.	Output pin reports fault via active pulldown interrupt, or reports VCE or VGE state via logic high/low. Pullup pin to VDD with a 50 kΩ resistor or left open if unused.
14	FSSTATE	Input/digital	Fail-safe gate state control pin.	Gate output control pin. Connect to GND1 if unused. Internal passive pulldown to GND1.
15	FSENB	Input/digital	Fail-safe mode enable pin.	Active-low pin enabling Fail-Safe mode (FSSTATE controls gate). Internal passive pulldown to GND1. Connect to VDD if unused.
Pins 17 to 32 (high-voltage, isolated pins)				
17, 32	GND2	Ground 2	Ground for isolated (HV) domain power, analog, and logic.	Redundant GND2 pins provide ground reference for all isolated high-voltage (HV) domain. Isolated from all circuitry referenced to GND1. Connect to power device emitter/source.
18	CLAMP	Input/analog	Sense terminal for VCE/VDS overvoltage during turn-off.	CLAMP detects Zener breakdown current and increase gate drive impedance and employ soft shutdown for turn-off. Connect to VEE if unused.
19	DESAT	Input-output/analog	Drive/sense terminal for VCE/VDS desaturation condition.	Connected to GND2 if unused.
20	ISENSE	Input/analog	Current sense feedback pin.	Resistive network converts current mirror into readable voltage signal on ISENSE. Connect to GND2 if unused.
21, 23	VEE	Input/power	Negative gate supply voltage.	VEE is the negative voltage on the isolated domain, and is referenced to GND2. Connect to GND2 if a negative supply is not used.
22	GL	Output/analog	Pulldown pin for output gate turn-off/ discharge event.	GL pin pulls gate to VEE.
24	AMC	Input-output/analog	Direct connect to gate for gate voltage sense and active Miller clamp function.	AMC provides low-impedance holdoff (active Miller clamp) and senses VGE/VGS for reporting and diagnostics.
25	GH	Output/analog	Pullup pin for output gate turn-on event.	GH pin pulls gate to VCCREG.
26	AMUXIN	Input/analog	General-purpose input for isolated ADC.	One of many SPI-selectable inputs for the isolated ADC. Connect to GND2 if unused.
27	VCCREG	Output/power	Internally-regulated positive gate supply.	Programmable gate supply derived from VCC, referenced to GND2. Connect to VCC if unused.
28	VCC	Input/power	Positive voltage supply for isolated domain circuitry.	Referenced to GND2.
29	FSISO	Input/digital	HV domain pin to enable the Fail-safe state.	Active-high disables PWM, FSSTATE, and, according to the part number, turns on gate (MGD3160AM515EK, MGD3160AM315EK, MGD3160AM518EK or MGD3160AM318EK) or 3-states GATE (MGD3160AM535EK, MGD3160 AM335EK, MGD3160AM538EK or MGD3160 AM338EK).
30	TSENSEA	Input/analog	Anode of temp sense diode/NTC of the power module.	TSENSEA reads back voltage from temperature sense element, and is referenced to GND2. Includes possible current driver for temp sense network. The temperature sense network cathode should be connected to GND2. Connect to VREF if unused.
31	VREF	Output/power	Internally regulated reference voltage for HV domain analog, ADC, and logic.	Output for an internally generated 5.0 V, 20 mA regulator. Referenced to GND2.

All information provided in this document is subject to legal disclaimers.

© 2026 NXP B.V. All rights reserved.

8 Limiting values

8.1 Range of functionality

Table 3. Range of functionality

All voltages referenced to GND1 (LV domain) or GND2 (HV domain). Currents are positive into and negative out of the specified pins.

Symbol	Description (rating)	Min	Max	Unit
T_J	Operating junction temperature	−40	150	°C
f_{PWM}	PWM switching frequency	0	100	kHz
V_{VEE}	High-voltage domain negative supply voltage [1]	−10	0.3	V
VSUP not connected to VDD				
V_{VSUP}	Low-voltage domain supply voltage, full performance (MGD3160AM515EK, MGD3160AM535EK, MGD3160AM518EK or MGD3160AM538EK 5.0 V option) [2]	6	32	V
	Low-voltage domain supply voltage, full performance (MGD3160AM315EK, MGD3160AM335EK, MGD3160AM318EK or MGD3160AM338EK 3.3 V option) [2]	4.5	32	V
V_{VSUP_JS}	Low-voltage domain jump start voltage, 1 minute at 25 °C [3]	—	28	V
V_{VSUP_LD}	Low-voltage domain load dump voltage, 400 ms at 25 °C [4] ***Note:*** *Load dump voltage test according to ISO16750-2 Test B*	—	40	V
VSUP connected to VDD (MGD3160AM515EK, MGD3160AM535EK, MGD3160AM518EK or MGD3160AM538EK, 5.0 V option)				
V_{VDD}, V_{VSUP}	Low-voltage domain supply voltage [5]	4.75	5.25	V
VCC not connected to VCCREG				
V_{VCC}	High-voltage domain positive supply voltage [1]	—	25	V
V_{VCCREG}	High-voltage domain post regulated supply voltage [1]	9.3	—	V
VCC connected to VCCREG				
V_{VCC}, V_{VCCREG}	High-voltage domain positive supply voltage [1]	9.3	25	V

[1] Ref = GND2
[2] Ref = GND1, VDD generated internally
[3] Jump start test according to ISO16750-2
[4] Load dump voltage test according to ISO16750-2 Test B
[5] Ref = GND1, VDD and VSUP connected, VDD generated externally

8.2 Absolute maximum ratings

All voltages are referenced to GND1 or GND2. Currents are positive into and negative out of the specified pins. Exceeding these ratings may cause malfunction or permanent device damage.

Table 4. Absolute maximum ratings

All voltages referenced to GND1 (LV domain) or GND2 (HV domain). Currents are positive into and negative out of the specified pins.

Symbol	Description (Rating)	Min	Max	Unit
Power supplies and current references				
V_{VSUP}	Low-voltage domain supply voltage [1]	−0.3	40	V
V_{VDD3p3}	Low-voltage domain logic supply voltage, 3.3 V version [1]	−0.3	6.0	V
V_{VDD5}	Low-voltage domain logic supply voltage, 5.0 V version [1]	−0.3	6.0	V
V_{VCC}	High-voltage domain positive supply voltage [2]	−0.3	25	V
V_{VEE}	High-voltage domain negative supply voltage [2]	−12	0.3	V
$V_{VCC\text{-}VEE}$	High-voltage domain positive/negative supply	−0.3	37	V
V_{VCCREG}	High-voltage domain post regulated supply voltage [2]	−0.3	25	V

All information provided in this document is subject to legal disclaimers.

© 2026 NXP B.V. All rights reserved.

Table 4. Absolute maximum ratings*...continued*

All voltages referenced to GND1 (LV domain) or GND2 (HV domain). Currents are positive into and negative out of the specified pins.

Symbol	Description (Rating)		Min	Max	Unit
I_{VCCREG}	VCCREG output current		—	–100	mA
V_{VREF}	VREF voltage	[2]	−0.3	6.0	V
I_{VREF}	VREF output current		—	–20	mA
Logic pins					
V_{IN}	Logic input pin voltage (FSSTATE, FSENB, PWM, PWMALT, SCLK, CSB, MOSI)	[1]	−0.3	18	V
V_{OUT}	Logic output pin voltage (MISO, INTB, INTA, AOUT)	[1]	−0.3	V_{VDD} + 0.3 V	V
V_{INTB}	INTB voltage	[1]	-0.3	6.3	V
V_{FSISO}	Logic input pin voltage (FSISO)	[2]	−0.3	6.3	V
Gate drive output stage					
V_{GH}	GH voltage (DC)	[2]	V_{VEE}− 0.3	V_{VCCREG} + 0.3	V
	GH voltage (Transient voltage)	[2] [3]	V_{VEE} – 1.0	V_{VCCREG} + 0.3	V
V_{GL}	GL voltage (DC)	[2]	V_{VEE} − 0.3	V_{VCCREG} + 0.3	V
	GL voltage (Transient voltage)	[2] [3]	V_{VEE} – 1.0	V_{VCCREG} + 0.3	V
V_{AMC}	AMC voltage (DC)	[2]	V_{VEE} − 0.3	V_{VCCREG} + 0.3	V
	AMCvoltage (Transient voltage)	[2] [3]	V_{VEE} – 1.0	V_{VCCREG} + 0.3	V
$I_{SOURCEMAX}$	GH max. source current	[4]	—	–15	A
$I_{SINKMAX}$	GL, AMC max. sink current	[4]	—	15	A
V_{CLAMP}	CLAMP voltage	[2]	VEE − 0.3	V_{VCC} + 0.3 V	V
V_{DESAT}	DESAT voltage	[2]	−0.3	V_{VCC} + 0.3 V	V
Temperature sense pin					
$V_{TSENSEA}$	TSENSEA voltage	[2]	−0.3	6.0	V
Interrupt pins					
I_{INTA}	Open drain DC output current	[5]	—	–20	mA
I_{INTB}	Open drain DC output current	[5]	—	–20	mA
ISENSE sense pin					
V_{ISENSE}	ISENSE voltage	[2]	−2.0	V_{VCC} + 0.3 V	V
AMUXIN pin[6]					
V_{AMUXIN}	AMUXIN voltage	[2]	−0.3	6.0	V
ESD ratings					
V_{ESDHBM}	ESD voltage (HBM) All pins	[7]	 −2.0	 2.0	kV
V_{ESDCDM}	ESD voltage (CDM) Corner pins Other pins	[8]	 −750 −500	 750 500	V
$V_{ESDModule}$	ESD voltage (module level) VSUP, GND1, GND2 pins	[9]	 −8.0	 8.0	kV
Immunity					

All information provided in this document is subject to legal disclaimers.

© 2026 NXP B.V. All rights reserved.

Table 4. Absolute maximum ratings*...continued*

All voltages referenced to GND1 (LV domain) or GND2 (HV domain). Currents are positive into and negative out of the specified pins.

Symbol	Description (Rating)	Min	Max	Unit
dV_{ISO}/dt	Common mode transient immunity [10]	—	100	V/ns
PWM frequency				
f_{PWMMAX}	Maximum switching frequency	—	100	kHz

[1] Ref = GND1
[2] Ref = GND2
[3] Guaranteed by design, transient voltage duration < 200ns
[4] 50 %, 100 nF, 10 kHz
[5] V_{INTB}, V_{INTA} < 1.0 V
[6] ADC performance is guaranteed by design up to 500 µA injected current on AMUXIN pin.
[7] **Human Body Model (HBM) at device level**
ANSI/ESDA/JEDEC JS-001: 2010 Model HBM (human body model)
Electrostatic Discharge (ESD) Sensitivity Testing Human Body Model (HBM)
Test points: pin to GND1 and pin to GND2
[8] **Charged Device Model (CDM)**
ANSI/ESD S5.3.1-2009
ESD Association Standard for Electrostatic Discharge Sensitivity Testing - Charged Device Model (CDM) - Component Level
[9] **Module Level ESD Tests**
ISO 10605:2008/Cor. 1:2010(E)
Road vehicles – Test methods for electrical disturbances from electrostatic discharge
[10] Pulse width = 10 ns

8.3 Thermal characteristics

Table 5. Thermal ratings

Exceeding these ratings may cause a malfunction or permanent damage to the device.

Symbol	Description (rating)	Min	Max	Unit
Thermal ratings				
T_J	Operating junction temperature	−40	150	°C
T_{STG}	Storage temperature	−65	150	°C
T_{OTSDth}	Overtemperature shutdown threshold of IC	180	210	°C
T_{PPRT}	Peak package reflow temperature during reflow [1] [2]	—	260	°C
MSL	Moisture Sensitivity Level	—	3	—

[1] NXP's Package Reflow capability meets Pb-free requirements for JEDEC standard J-STD-020C. For Peak Package Reflow Temperature and Moisture Sensitivity Levels (MSL), contact NXP.
[2] Pin soldering temperature limit is for 10 seconds maximum duration. Not designed for immersion soldering. Exceeding these limits may cause malfunction or permanent damage to the device.

Table 6. Thermal resistance characteristics

Symbol	Description (rating)	Min	Max	Unit
Thermal resistance ratings				
$R_{\theta JA}$	Junction-to-Ambient thermal resistance [1] [2]	—	51	°C/W
$R_{\theta JB}$	Junction-to-Board thermal resistance [3]	—	34	°C/W

[1] Per EIA/JESD51-2A Integrated Circuits Thermal Test Method Environmental Conditions - Natural Convection (Still Air)
[2] Per EIA/JESD51-7 High Effective Thermal Conductivity Test Board for Leaded Surface Mount Packages
[3] JEDEC high-K thermal test board without thermal attachment.

All information provided in this document is subject to legal disclaimers.

© 2026 NXP B.V. All rights reserved.

8.4 Isolation and safety related specifications

Table 7. Insulation specifications

Symbol	Description (Rating)	Value	Unit
MGD3160AM515EK, MGD3160AM535EK, MGD3160AM315EK and MGD3160AM335EK			
CLR	External clearance distance [1]	> 7.72	mm
CPG	External creepage distance [2]	> 7.72	mm
DTI	Internal clearance (Gap) distance through insulation	> 80	µm
CTI	Comparative tracking index [3]	> 400	V
M_{Group}	Material (isolation) group [4]	II	—
IEC150 IEC300 IEC600	Installation classification [5] Mains voltage ≤ 150 V_{RMS} Mains voltage ≤ 300 V_{RMS} Mains voltage ≤ 600 V_{RMS}	 I to IV I to III I to II	—
MGD3160AM518EK, MGD3160AM538EK, MGD3160AM318EK and MGD3160AM338EK			
CLR	External clearance distance [1]	> 8.00	mm
CPG	External creepage distance [2]	> 8.00	mm
DTI	Internal clearance (Gap) distance through insulation	> 80	µm
CTI	Comparative tracking index [3]	> 600	V
M_{Group}	Material (isolation) group [4]	I	—
IEC150 IEC300 IEC600	Installation classification [5] Mains voltage ≤ 150 V_{RMS} Mains voltage ≤ 300 V_{RMS} Mains voltage ≤ 600 V_{RMS}	 I to IV I to III I to II	—

[1] per IEC 60950-1 Table 2K
[2] per IEC 60950-1 Table 2N
[3] per DIN IEC 112/VDE 0303 Part 1
[4] per IEC 60664-1
[5] per IEC 60664-1 Table F.1

Table 8. DIN V VDE 0884-10 (VDE V 0884-10) insulation characteristics

Symbol	Description (Rating)	Value	Units
CCLASS	Climatic classification	40/125/21	—
PDEGREE	Pollution degree	2	—
V_{IORM}	Maximum repetitive peak isolation voltage	1500	V_{pk}
V_{IOWM}	Maximum working isolation voltage	1060	V_{RMS}
V_{IOTM}	Maximum transient isolation voltage [1]	4000	V_{pk}
V_{IOTM}	Maximum transient isolation voltage [2]	8000	V_{pk}
V_{IOSM}	Maximum surge isolation tested voltage [3]	10000	V_{pk}
$V_{PD(m)}$	Input to output test voltage 100 % test method B1 [4]	2812	V_{pk}
	Input to output test voltage type test method A [5]	2400	V_{pk}
	Input to output test voltage type test subgroups 1 to 3 [6]	1800	V_{pk}
C_{IO}	Barrier capacitance, input to output	< 3	pF
R_{IO}	Insulation resistance at T_s, V_{IO} = 500 V	$> 10^9$	Ω
T_S	Maximum junction temperature	150	°C
P_S	Safe total dissipated power	0.38	W
V_{ISO}	Withstand isolation voltage (1 minute) [7]	5000	V_{RMS}

[1] For part numbers MGD3160AM515EK, MGD3160AM535EK, MGD3160AM315EK, and MGD3160AM335EK
[2] For part numbers MGD3160AM518EK, MGD3160AM538EK, MGD3160AM318EK, and MGD3160AM338EK

All information provided in this document is subject to legal disclaimers.

© 2026 NXP B.V. All rights reserved.

[3] per IEC 60065, 1.2 µ/50 µs waveform
[4] $V_{ini} = V_{IOTM}$, t_{ini} = 1 s
$V_{PD(m)} = V_{IORM}$ x 1.875, t_m = 1 s, Partial discharge < 5pC
[5] $V_{ini} = V_{IOTM}$, t_{ini} = 60 s
$V_{PD(m)} = V_{IORM}$ x 1.6, t_m = 10 s, Partial discharge < 5pC
[6] $V_{ini} = V_{IOTM}$, t_{ini} = 60 s
$V_{PD(m)} = V_{IORM}$ x 1.2, t_m = 10 s, Partial discharge < 5pC
[7] $V_{TEST} = V_{ISO}$ = 5000 V_{RMS}, t = 60 s (NXP qualification)
V_{TEST} = 2500 $V_{RMS(4243Vpk)}$, t = 1 s (100 % production) (MGD3160AM515EK, MGD3160AM535EK, MGD3160AM315EK and MGD3160AM335EK)
V_{TEST} = 5000 $V_{RMS(8500Vpk)}$, t = 1 s (100 % production) (MGD3160AM518EK, MGD3160AM538EK, MGD3160AM318EK and MGD3160AM338EK)

The GD3160 uses the same isolation technology as GD3100, but device certification and manufacturing certification are still pending until the device goes into production for the component programs listed in Table 9.

Table 9. Regulatory information

Standard	Approval
UL 1577	Certified 5.0 kV rms for 1 min single protection, 5.0 kV rms.
VDE 0884-10	Tested in accordance with DIN V VDE V 0884-10 reinforced isolation.

All information provided in this document is subject to legal disclaimers.

© 2026 NXP B.V. All rights reserved.

9 Electrical characteristics

9.1 Power management

Table 10. Power management electrical characteristics

VDD, VCC, VCCREG, VEE in regulation, T_J = −40 to 150 °C, unless otherwise specified. All voltages referenced to GND1 or GND2. Currents are positive into and negative out of the specified pins.

Symbol	Parameter	Min	Typ	Max	Unit
Voltage supplies and references - low-voltage domain. Voltages reference to GND1					
I_{VSUP}	VSUP quiescent current [1]	—	5	8	mA
$VSUP_{OV_TH_H}$	VSUP overvoltage threshold (rising)	28	—	32.0	V
$VSUP_{OV_TH_HYS}$	VSUP overvoltage threshold hysteresis	0.25	—	0.75	V
$VSUP_{UV_TH_L}$	VSUP undervoltage threshold (falling) [2]	5.5	—	6.5	V
$VSUP_{UV_TH_HYS}$	VSUP undervoltage threshold hysteresis	0.05	—	0.25	V
$VSUP_{POR_FALLING}$	Low-voltage domain POR condition (falling), POR when VSUP < $VSUP_{POR_FALLING}$ [3]	2	—	—	V
$VSUP_{POR_RISING}$	Low-voltage domain POR clear (rising), POR clear when VSUP > $VSUP_{POR_RISING}$ [3]	—	—	3.75	V
t_{VSUP_FILT}	VSUP over/under voltage fault filter time	32	40	48	µs
$t_{VDD_FLT_FILT}$	VDD over/under voltage fault filter time	16	20	24	µs
GD3160 with 3.3 V VDD					
V_{VDD3p3}	Output of VDD regulator when powered by VSUP	3.20	3.30	3.40	V
$VDD_{OV_TH_H3p3}$	VDD overvoltage threshold (rising)	3.60	3.75	3.90	V
$VDD_{OV_TH_HYS3p3}$	VDD overvoltage threshold hysteresis	0.075	0.15	0.20	V
$VDD_{UV_TH_L3p3}$	VDD undervoltage threshold (falling)	2.56	2.73	2.92	V
$VDD_{UV_TH_HYS3p3}$	VDD undervoltage threshold hysteresis	0.075	0.15	0.20	V
GD3160 with 5.0 V VDD [4]					
V_{VDD5}	Output of VDD regulator when powered by VSUP	4.85	5.00	5.15	V
$VDD_{OV_TH_H5}$	VDD overvoltage threshold (rising)	5.35	5.55	5.77	V
$VDD_{OV_TH_HYS5}$	VDD overvoltage threshold hysteresis	0.075	0.15	0.20	V
$VDD_{UV_TH_L5}$	VDD undervoltage threshold (falling)	4.12	4.30	4.48	V
$VDD_{UV_TH_HYS5}$	VDD undervoltage threshold hysteresis	0.075	0.15	0.20	V
Voltage suppllies and references - high-voltage domain. Voltages referenced to GND2					
$VCC_{OV_TH_H}$	VCC overvoltage threshold (rising edge)	23.0	—	25.0	V
$VCC_{OV_TH_HYS}$	VCC overvoltage threshold hysteresis	0.25	—	0.90	V
$t_{VCC_OV_FILT}$	VCC overvoltage fault filter time	32	40	48	µs
$VCC_{UV_TH_L}$	VCC undervoltage threshold (falling edge)	5.5	—	6.5	V
$VCC_{UV_TH_HYS}$	VCC undervoltage threshold hysteresis	0.10	0.15	0.25	V
$VVCC_{POR_FALLING}$	High-voltage domain POR condition (falling) POR when VCC < $VCC_{POR_FALLING}$ [3]	2	—	—	V
$VVCC_{POR_RISING}$	High-voltage domain POR clear (rising) ,POR clear when VCC > VCCPOR_RISING [3]	—	—	3.75	V
$t_{VCC_UV_FILT}$	VCC undervoltage fault filter time	16	20	24	µs
I_{VCC}	VCC quiescent current [5]	6	7.5	11	mA

All information provided in this document is subject to legal disclaimers.

© 2026 NXP B.V. All rights reserved.

Table 10. Power management electrical characteristics...*continued*

VDD, VCC, VCCREG, VEE in regulation, T_J = −40 to 150 °C, unless otherwise specified. All voltages referenced to GND1 or GND2. Currents are positive into and negative out of the specified pins.

Symbol	Parameter	Min	Typ	Max	Unit
$VCCREG_{OUT}$	VCCREG regulated output voltage, VCCREG[2:0] = '000' (VCC > 15.0 V)	13.75	14	14.28	V
	VCCREG regulated output voltage, VCCREG[2:0] = '001' (VCC > 16.0 V)	14.72	15	15.28	V
	VCCREG regulated output voltage, VCCREG[2:0] = '010' (VCC > 17.0 V)	15.7	16	16.3	V
	VCCREG regulated output voltage, VCCREG[2:0] = '011' (VCC > 18.0 V)	16.67	17	17.33	V
	VCCREG regulated output voltage, VCCREG[2:0] = '100' (VCC > 19.0 V)	17.64	18	18.36	V
	VCCREG regulated output voltage, VCCREG[2:0] = '101' (VCC > 20.0 V)	18.62	19	19.38	V
	VCCREG regulated output voltage, VCCREG[2:0] = '110' (VCC > 21.0 V)	19.6	20	20.4	V
	VCCREG regulated output voltage, VCCREG[2:0] = '111' (VCC > 22.0 V)	20.57	21	21.43	V
$VCCREG_{DO}$	VCCREG dropout voltage [6]	—	—	0.5	V
$VCCREG_{UV_TH_L}$	VCCREG undervoltage threshold (falling edge), UV_TH = '000'	9.50	10.00	10.50	V
	VCCREG undervoltage threshold (falling edge), UV_TH = '001'	9.98	10.50	11.03	V
	VCCREG undervoltage threshold (falling edge), UV_TH = '010'	10.45	11.00	11.55	V
	VCCREG undervoltage threshold (falling edge), UV_TH = '011' (default)	10.93	11.50	12.08	V
	VCCREG undervoltage threshold (falling edge), UV_TH = '100'	11.40	12.00	12.60	V
	VCCREG undervoltage threshold (falling edge), UV_TH = '101'	11.88	12.50	13.13	V
	VCCREG undervoltage threshold (falling edge), UV_TH = '110'	12.35	13.00	13.65	V
	VCCREG undervoltage threshold (falling edge), UV_TH = '111'	12.83	13.50	14.18	V
$VCCREG_{UV_TH_HYS}$	VCCREG undervoltage threshold hysteresis	0.05	0.15	0.230	V
$t_{VCCREG_FLT_FILT}$	VCCREG undervoltage fault filter time	32	40	48	µs
V_{VREF}	VREF regulated voltage [7]	4.938	5.00	5.079	V
V_{VREF_TVAR}	VREF variation with temperature [8] [3]	−15	—	15	mV
$VREF_{UV_TH_L}$	VREF undervoltage threshold (falling)	4.12	4.30	4.49	V
$VREF_{UV_TH_HYS}$	VREF undervoltage threshold hysteresis	0.10	0.15	0.225	V
$t_{VREF_FLT_FILT}$	VREF UV fault filter time	16	20	24	µs
I_{VEE}	VEE quiescent current [9]	−0.850	−0.045	−0.2	mA
VEE_{OOR_TH}	VEE out of range	−2.0	−1.5	−1.0	V
$t_{VEE_FLT_FILT}$	VEE out of range fault filter time	32	40	48	µs
Current limits and references					
I_{VDD_LIM}	Current limit of VDD regulator	−60	−30	−20	mA
I_{VREF_LIM}	Current limit of VREF regulator	−60	—	−20	mA
I_{VCCREG_LIM}	Current limit of VCCREG regulator	−1500	−1100	−800	mA

[1] VSUP = 14 V, IGBT off
[2] Valid for MGD3160AM5xxEK only (VDD option = 5 V)
[3] Guaranteed by design
[4] When VDD is externally supplied, the applied voltage must be 4.75 to 5.25 V.
[5] VCC = 17 V, I_{VREF} = 0 mA, IGBT off
[6] VCC < 15 V, I_{VCCREG} = 100 mA
[7] VCCREG > $VCCREG_{UV_TH}$, I_{VREF} = 0 to 20 mA
[8] T_J = 25 to 150 °C, I_{VREF} = 1.0 mA
[9] VEE = −8.0 V, I_{VREF} = 0 mA, IGBT off

9.2 Digital inputs and outputs

Table 11 and Table 12 specify characteristics of the low-voltage digital I/O pins. Table 13 specifies the FSISO digital input pin on the high-voltage (HV) domain.

All information provided in this document is subject to legal disclaimers.

© 2026 NXP B.V. All rights reserved.

Table 11. Low-voltage digital I/O electrical characteristics

VDD, VCC, VCCREG, VEE in regulation, T_J = –40 °C to +150 °C, unless otherwise specified. All voltages referenced to GND1. Currents are positive into and negative out of the specified pins.

Symbol	Parameter	Min	Typ	Max	Unit
V_{INL}	Logic low input voltage [1]	—	—	0.30 x VDD	V
V_{INH}	Logic high input voltage [1]	0.70 x VDD	—	—	V
V_{INhys}	Input voltage threshold hysteresis [1]	0.20 x VDD	0.25 x VDD	0.30 x VDD	V
$INPU_{LK}$	Input leakage for pins with pullup resistor pins: CSB, PWMALT [2] [3]	—	—	4.0	µA
$INPD_{LK}$	Input leakage for pins with pulldown resistor pins: MOSI, SCLK, PWM, FSSTATE, FSENB, FSISO [3] [4]	–1.0	—	—	µA
C_{IN}	Input capacitance, logic pins [3]	—	—	10	pF
V_{OL}	Logic low output voltage [5]	—	—	0.2 x VDD	V
V_{OLINT}	Logic low output voltage for open-drain interrupts [6]	—	—	0.2 x VDD	V
V_{OH}	Logic high output voltage [7]	0.8 x VDD	—	—	V
t_{RTRPT_DLY}	Real time reporting delay	200	220	240	ns
t_{MIN}	Input pulse deglitch [8]	34	—	67	ns
t_{fltdly}	Event detection delay to INTA or INTB low	—	1.28	1.6	µs
t_{onmin}	Minimum on pulse width (PWM) [9]	—	—	220	ns
t_{offmin}	Minimum off pulse width (PWM) [9]	—	—	220	ns
R_{PU}	Pullup resistor for CSB, INTB, INTA	30	50	75	kΩ
R_{PU_PWMALT}	Pullup resistor for PWMALT	300	500	750	kΩ
R_{PD}	Pulldown resistor FSSTATE, FSENB, PWM, SCLK, MOSI	30	50	75	kΩ
$t_{MINFSSTATE}$	FSSTATE input pulse deglitch	931	1000	1071	ns
$t_{MINFSENB0}$	FSENB input pulse deglitch (FSSTATE = 0 or PWM = 0)	0.465	0.5	0.536	µs
$t_{MINFSENB1}$	FSENB input pulse deglitch (FSSTATE = 1 or PWM = 1)	5.995	6.5	7.025	µs
t_{MIN_DT} (TIME_2 = 1)[10]	PWM dead time, DEADT = '0000'	0.081	0.1	0.198	µs
	PWM dead time, DEADT = '0001'	0.12	0.14	0.239	µs
	PWM dead time, DEADT = '0010'	0.217	0.24	0.342	µs
	PWM dead time, DEADT = '0011'	0.372	0.4	0.507	µs
	PWM dead time, DEADT = '0100'	0.508	0.54	0.651	µs
	PWM dead time, DEADT = '0101'	0.741	0.78	0.898	µs
	PWM dead time, DEADT = '0110'	0.993	1.04	1.166	µs
	PWM dead time, DEADT = '0111'	1.226	1.28	1.413	µs
	PWM dead time, DEADT = '1000'	1.478	1.54	1.681	µs
	PWM dead time, DEADT = '1001'	1.711	1.78	1.928	µs
	PWM dead time, DEADT = '1010'	1.963	2.04	2.196	µs
	PWM dead time, DEADT = '1011'	2.196	2.28	2.443	µs
	PWM dead time, DEADT = '1100'	2.448	2.54	2.711	µs
	PWM dead time, DEADT = '1101'	2.681	2.78	2.958	µs
	PWM dead time, DEADT = '1110'	2.933	3.04	3.226	µs
	PWM dead time, DEADT = '1111' (default)	3.132	3.28	3.406	µs

All information provided in this document is subject to legal disclaimers.

© 2026 NXP B.V. All rights reserved.

Table 11. Low-voltage digital I/O electrical characteristics...*continued*

VDD, VCC, VCCREG, VEE in regulation, T_J = –40 °C to +150 °C, unless otherwise specified. All voltages referenced to GND1. Currents are positive into and negative out of the specified pins.

Symbol	Parameter	Min	Typ	Max	Unit
t_{MIN_DT} (TIME_2 = 0)	PWM dead time, DEADT = '0000',	0.128	0.16	0.329	µs
	PWM dead time, DEADT = '0001'	0.206	0.24	0.411	µs
	PWM dead time, DEADT = '0010'	0.4	0.44	0.617	µs
	PWM dead time, DEADT = '0011'	0.71	0.76	0.947	µs
	PWM dead time, DEADT = '0100'	0.982	1.04	1.235	µs
	PWM dead time, DEADT = '0101'	1.448	1.52	1.729	µs
	PWM dead time, DEADT = '0110'	1.952	2.04	2.265	µs
	PWM dead time, DEADT = '0111'	2.418	2.52	2.759	µs
	PWM dead time, DEADT = '1000'	2.922	3.04	3.295	µs
	PWM dead time, DEADT = '1001'	3.388	3.52	3.789	µs
	PWM dead time, DEADT = '1010'	3.892	4.04	4.325	µs
	PWM dead time, DEADT = '1011'	4.358	4.52	4.819	µs
	PWM dead time, DEADT = '1100'	4.862	5.04	5.355	µs
	PWM dead time, DEADT = '1101'	5.328	5.52	5.849	µs
	PWM dead time, DEADT = '1110'	5.832	6.04	6.385	µs
	PWM dead time, DEADT = '1111'	6.298	6.52	6.879	µs

[1] Pins: FSSTATE, FSENB, PWM, PWMALT, SCLK, CSB, MOSI
[2] CSB, PWMALT connected to VDD
[3] Guaranteed by design
[4] MOSI, SCLK, PWM, FSSTATE, FSENB connected to GND1; FSISO connected to GND2
[5] Pins: MISO, AOUT, INTA (when RTRPT = 1), I = 3.0 mA
[6] Pins: INTB, INTA (when RTRPT = 0), I = 10 mA
[7] Pins: MISO, AOUT, INTA (when RTRPT = 1), I = −2.0 mA
[8] Pins: PWM, PWMALT
[9] C_{Load} = 2 nF, guaranteed by design
[10] TIME_2_is Timer scaling bit of MODE1 register

Table 12. SPI timing

VDD, VCC, VCCREG, VEE in regulation, T_J = −40 to +150 °C, unless otherwise specified. All voltages referenced to GND1. Currents are positive into and negative out of the specified pins.

Symbol	Parameter	Limit value			Unit
		Min	Typ	Max	
f_{SPI}	Frequency of SPI operation [1] [2]	—	—	10	MHz
t_{lead}	Falling edge of CSB to rising edge of SCLK (required setup time) [2]	50	—	—	ns
t_{lag}	Falling edge of SCLK to rising edge of CSB (required setup time) [2]	50	—	—	ns
t_{wh}	High time of SCLK [2]	45	—	—	ns
t_{wl}	Low time of SCLK [2]	45	—	—	ns
t_{su1}	MOSI to rising edge of SCLK (required setup time) [2]	15	—	—	ns
t_h	MOSI to rising edge of SCLK (required hold time) [2]	15	—	—	ns
$t_{SO(en)}$	Time from falling edge of CSB to MISO low impedance [2]	—	—	30	ns
$t_{SO(dis)}$	Time from Rising Edge of CSB to MISO high Impedance [2]	—	—	30	ns
t_{valid}	Time from falling edge of SCLK to MISO data valid [3] [2]	—	—	30	ns

All information provided in this document is subject to legal disclaimers.

© 2026 NXP B.V. All rights reserved.

Table 12. SPI timing*...continued*

VDD, VCC, VCCREG, VEE in regulation, T_J = −40 to +150 °C, unless otherwise specified. All voltages referenced to GND1. Currents are positive into and negative out of the specified pins.

Symbol	Parameter	Limit value			Unit
		Min	Typ	Max	
t_{xfer_delay}	Minimum message dead time	19	—	—	µs
t_{BIST}	BIST duration	—	—	28	ms

[1] $T_{SPI} = 1/f_{SPI}$
[2] Guaranteed by design
[3] $0.2 \times V_{DD} \le MISO \le 0.8 \times V_{DD}$, CL = 50 pF

Table 13. FSISO pin electrical characteristics

VCC, VCCREG in regulation, T_J = –40 °C to +150 °C, unless otherwise specified. All voltages referenced to GND2. Currents are positive into and negative out of the specified pins.

Symbol	Parameter	Min	Typ	Max	Unit
V_{FSISOL}	FSISO logic low input voltage [1]	—	—	0.3 x VREF	V
V_{FSISOH}	FSISO logic high input voltage [1]	0.7 x VREF	—	1.05 x VREF	V
$V_{FSISOhys}$	FSISO input voltage threshold hysteresis [1]	0.20 x VREF	0.25 x VREF	0.32 x VREF	V
$C_{FSISOIN}$	FSISO input capacitance [2]	—	—	10	pF
$R_{FSISOPD}$	FSISO pulldown resistor	30	60	100	kΩ
$t_{FSISOMIN}$	FSISO input pulse deglitch	500	750	1100	ns

[1] Reference = GND2
[2] Guaranteed by design

9.3 Gate drive outputs

Table 14. Gate drive output stage electrical characteristics

VDD, VCC, VCCREG, VEE in regulation, T_J = −40 to 150 °C, unless otherwise specified. All voltages referenced to GND2. Currents are positive into and negative out of the specified pins.

Symbol	Parameter	Min	Typ	Max	Unit
Static electrical ratings					
$RDSON_{GH}$	Gate drive pullup transistor GH on-resistance [1]	—	—	800	mΩ
$RDSON_{GL}$	Gate drive pulldown transistor GL on-resistance [1]	—	—	500	mΩ
$RDSON_{AMC}$	Gate drive pulldown transistor AMC on-resistance [1]	—	—	500	mΩ
I_{DSS_GH}	Gate drive pullup transistor saturation current [2]	14.0	19.0	—	A
I_{DSS_GL}	Gate drive pulldown transistor saturation current [3]	14.0	19.0	—	A
I_{DSS_AMC}	Active Miller clamp transistor saturation current [3]	14.0	19.0	—	A
I_{LEAKGH}	GH leakage current [2]	–10	—	—	µA
I_{LEAKGL}	GL leakage current [3]	—	—	150	µA
$I_{LEAKAMC}$	AMC leakage current [4]	—	—	30	µA
Switching and delay timing					
$t_{ON_DLY_GH}$	PWM to GH turn-on delay [5]	75	—	125	ns
t_{ON_GH}	PWM to GH turn on time [6]	100	—	150	ns
$t_{ON_DLY_GL}$	PWM to GL turn on delay [7]	75	—	125	ns
t_{ON_GL}	PWM to GL turn on time [8]	100	—	150	ns
t_{pd_dist}	PWM to output pulse delay distortion $\lvert t_{ON_DLY_GH} - t_{ON_DLY_GL} \rvert$ [9]	-32	—	32	ns
t_{AMC_FILT}	AMC turn on filter time	170	180	220	ns

All information provided in this document is subject to legal disclaimers.

© 2026 NXP B.V. All rights reserved.

Table 14. Gate drive output stage electrical characteristics...*continued*

VDD, VCC, VCCREG, VEE in regulation, T_J = −40 to 150 °C, unless otherwise specified. All voltages referenced to GND2. Currents are positive into and negative out of the specified pins.

Symbol	Parameter	Min	Typ	Max	Unit
Gate voltage monitor					
V_{GEON_TH}	V_{GE} monitor threshold high [10]	−2.3	−2.0	−1.7	V
V_{AMC_TH}	Active Miller clamp threshold voltage (referenced to VEE) [11]	1.7	—	2.3	V
V_{GOFF}	Unpowered gate clamp voltage of holdoff circuit [12]	—	—	3.0	V
$t_{RTMONDLY}$ (TIME_2 = 1)[13]	PWM monitor delay time, RTMONDLY = '0000'	—	—	—	ns
	PWM monitor delay time, RTMONDLY = '0001'	—	—	—	ns
	PWM monitor delay time, RTMONDLY = '0010'	383	400	512	ns
	PWM monitor delay time, RTMONDLY = '0011'	577	600	718	ns
	PWM monitor delay time, RTMONDLY = '0100'	771	800	924	ns
	PWM monitor delay time, RTMONDLY = '0101'	965	1000	1130	ns
	PWM monitor delay time, RTMONDLY = '0110'	1159	1200	1336	ns
	PWM monitor delay time, RTMONDLY = '0111'	1353	1400	1542	ns
	PWM monitor delay time, RTMONDLY = '1000'	1547	1600	1748	ns
	PWM monitor delay time, RTMONDLY = '1001'	1741	1800	1954	ns
	PWM monitor delay time, RTMONDLY = '1010' (default)	1935	2000	2160	ns
	PWM monitor delay time, RTMONDLY = '1011'	2323	2400	2572	ns
	PWM monitor delay time, RTMONDLY = '1100'	2711	2800	2984	ns
	PWM monitor delay time, RTMONDLY = '1101'	3099	3200	3396	ns
	PWM monitor delay time, RTMONDLY = '1110'	3487	3600	3808	ns
	PWM monitor delay time, RTMONDLY = '1111'	3875	4000	4220	ns
$t_{RTMONDLY}$ (TIME_2 = 0)[13]	PWM monitor delay time, RTMONDLY = '0000'	—	—	—	ns
	PWM monitor delay time, RTMONDLY = '0001'	378	400	464	ns
	PWM monitor delay time, RTMONDLY = '0010'	766	800	1024	ns
	PWM monitor delay time, RTMONDLY = '0011'	1154	1200	1436	ns
	PWM monitor delay time, RTMONDLY = '0100'	1542	1600	1848	ns
	PWM monitor delay time, RTMONDLY = '0101'	1930	2000	2260	ns
	PWM monitor delay time, RTMONDLY = '0110'	2318	2400	2672	ns
	PWM monitor delay time, RTMONDLY = '0111'	2706	2800	3084	ns
	PWM monitor delay time, RTMONDLY = '1000'	3094	3200	3496	ns
	PWM monitor delay time, RTMONDLY = '1001'	3482	3600	3908	ns
	PWM monitor delay time, RTMONDLY = '1010'	3870	4000	4320	ns
	PWM monitor delay time, RTMONDLY = '1011'	4646	4800	5144	ns
	PWM monitor delay time, RTMONDLY = '1100'	5422	5600	5968	ns
	PWM monitor delay time, RTMONDLY = '1101'	6198	6400	6792	ns
	PWM monitor delay time, RTMONDLY = '1110'	6974	7200	7616	ns
	PWM monitor delay time, RTMONDLY = '1111'	7750	8000	8440	ns
Fault management					

All information provided in this document is subject to legal disclaimers.

© 2026 NXP B.V. All rights reserved.

Table 14. Gate drive output stage electrical characteristics...*continued*

VDD, VCC, VCCREG, VEE in regulation, T_J = −40 to 150 °C, unless otherwise specified. All voltages referenced to GND2. Currents are positive into and negative out of the specified pins.

Symbol	Parameter	Min	Typ	Max	Unit
V_{2LTO}	Two-level turn-off voltage, 2LTOV = '0000'	6.22	6.48	6.74	V
	Two-level turn-off voltage, 2LTOV = '0001'	6.4	6.67	6.94	V
	Two-level turn-off voltage, 2LTOV = '0010'	6.59	6.87	7.14	V
	Two-level turn-off voltage, 2LTOV = '0011' (default)	6.8	7.08	7.37	V
	Two-level turn-off voltage, 2LTOV = '0100'	7.02	7.32	7.61	V
	Two-level turn-off voltage, 2LTOV = '0101'	7.26	7.56	7.87	V
	Two-level turn-off voltage, 2LTOV = '0110'	7.52	7.83	8.15	V
	Two-level turn-off voltage, 2LTOV = '0111'	7.8	8.13	8.45	V
	Two-level turn-off voltage, 2LTOV = '1000'	8.12	8.46	8.8	V
	Two-level turn-off voltage, 2LTOV = '1001'	8.46	8.81	9.16	V
	Two-level turn-off voltage, 2LTOV = '1010'	8.83	9.19	9.56	V
	Two-level turn-off voltage, 2LTOV = '1011'	9.23	9.62	10.0	V
	Two-level turn-off voltage, 2LTOV = '1100'	9.69	10.09	10.49	V
	Two-level turn-off voltage, 2LTOV = '1101'	10.2	10.62	11.04	V
	Two-level turn-off voltage, 2LTOV = '1110'	10.76	11.21	11.66	V
	Two-level turn-off voltage, 2LTOV = '1111'	11.4	11.88	12.36	V
I_{SSD}	Soft shutdown current, SSD_CUR = '000'	0.068	0.094	0.117	A
	Soft shutdown current, SSD_CUR = '001'	0.149	0.186	0.224	A
	Soft shutdown current, SSD_CUR = '010'	0.222	0.277	0.333	A
	Soft shutdown current, SSD_CUR = '011'	0.294	0.367	0.440	A
	Soft shutdown current, SSD_CUR = '100' (default)	0.455	0.541	0.628	A
	Soft shutdown current, SSD_CUR = '101'	0.591	0.704	0.816	A
	Soft shutdown current, SSD_CUR = '110'	0.729	0.858	0.986	A
	Soft shutdown current, SSD_CUR = '111'	0.847	0.996	1.146	A
t_{SSD} (TIME_2 = 0)[13]	Soft shutdown time, SSDT = '000'	1880	2000	2120	ns
	Soft shutdown time, SSDT = '001'	2850	3000	3150	ns
	Soft shutdown time, SSDT = '010'	3820	4000	4180	ns
	Soft shutdown time, SSDT = '011'	4790	5000	5210	ns
	Soft shutdown time, SSDT = '100'	5760	6000	6240	ns
	Soft shutdown time, SSDT = '101'	6730	7000	7270	ns
	Soft shutdown time, SSDT = '110'	7700	8000	8300	ns
	Soft shutdown time, SSDT = '111'	8670	9000	9330	ns
t_{SSD} (TIME_2 = 1)[13]	Soft shutdown time, SSDT = '000'	940	1000	1060	ns
	Soft shutdown time, SSDT = '001'	1425	1500	1575	ns
	Soft shutdown time, SSDT = '010'	1910	2000	2090	ns
	Soft shutdown time, SSDT = '011'	2395	2500	2605	ns
	Soft shutdown time, SSDT = '100' (default)	2880	3000	3120	ns
	Soft shutdown time, SSDT = '101'	3365	3500	3635	ns
	Soft shutdown time, SSDT = '110'	3850	4000	4150	ns
	Soft shutdown time, SSDT = '111'	4335	4500	4665	ns
t_{SSD_ACT}	Soft shutdown activation time	_	15	30	ns
t_{LATCH}	Soft shutdown latch enable time (one clock cycle)	_	20	21	ns

[1] Iload = 100 mA

All information provided in this document is subject to legal disclaimers.

© 2026 NXP B.V. All rights reserved.

[2] V_{VCCREG} = 15.0 V. Design limit
[3] Design limit
[4] AMC = VCC, AMC off
[5] 90 % PWM to 10 % V_{GE}. Includes deglitch. Guaranteed by design.
[6] 90 % PWM to 90 % V_{GE}. Includes deglitch. C = 2.0 nF. Guaranteed by design.
[7] 10 % PWM to 90 % V_{GE}. Includes deglitch. Guaranteed by design.
[8] 10 % PWM to 10 % V_{GE}. Includes deglitch. C = 2.0 nF. Guaranteed by design.
[9] Guaranteed by design
[10] Reference voltage is VCCREG
[11] Referenced to VEE; V_{AMC} - V_{VEE}
[12] VCCREG floating, pulldown gate current = 200 mA for 1 ms.
[13] TIME_2 is Timer scaling bit of MODE1 register

9.4 Current sense protection

Table 15. Short-circuit and overcurrent fault electrical characteristics

VDD, VCC, VCCREG, VEE in regulation, T_J = −40 to 150 °C, unless otherwise specified. All voltages referenced to GND2. Currents are positive into and negative out of the specified pins.

Symbol	Parameter	Min	Typ	Max	Unit
Short-circuit and overcurrent fault management					
V_{SC_TH}	Short-circuit voltage threshold, SCTH = '000'	0.460	0.5	0.540	V
	Short-circuit voltage threshold, SCTH = '001'	0.713	0.75	0.788	V
	Short-circuit voltage threshold, SCTH = '010'	0.950	1.00	1.050	V
	Short-circuit voltage threshold, SCTH = '011'	1.188	1.25	1.313	V
	Short-circuit voltage threshold, SCTH = '100'	1.425	1.50	1.575	V
	Short-circuit voltage threshold, SCTH = '101'	1.900	2.00	2.100	V
	Short-circuit voltage threshold, SCTH = '110'	2.375	2.50	2.625	V
	Short-circuit voltage threshold, SCTH = '111'	2.850	3.00	3.150	V
t_{2LTO_FILT}	Two-level turn-off filter time	80	100	120	ns
t_{SC_FILT}	Short-circuit filter time, SCFF = '0', SCFILT = '000'	383	400	438	ns
	Short-circuit filter time, SCFF = '0', SCFILT = '001'	480	500	541	ns
	Short-circuit filter time, SCFF = '0', SCFILT = '010'	577	600	644	ns
	Short-circuit filter time, SCFF = '0', SCFILT = '011'	674	700	747	ns
	Short-circuit filter time, SCFF = '0', SCFILT = '100'	771	800	850	ns
	Short-circuit filter time, SCFF = '0', SCFILT = '101'	868	900	953	ns
	Short-circuit filter time, SCFF = '0', SCFILT = '110'	965	1000	1056	ns
	Short-circuit filter time, SCFF = '0', SCFILT = '111'	1062	1100	1159	ns
t_{SC_FILT}	Short-circuit filter time, SCFF = '1', SCFILT = '000'	92	100	129	ns
	Short-circuit filter time, SCFF = '1', SCFILT = '001'	189	200	232	ns
	Short-circuit filter time, SCFF = '1', SCFILT = '010'	286	300	335	ns
	Short-circuit filter time, SCFF = '1', SCFILT = '011'	383	400	438	ns
	Short-circuit filter time, SCFF = '1', SCFILT = '100'	480	500	541	ns
	Short-circuit filter time, SCFF = '1', SCFILT = '101'	577	600	644	ns
	Short-circuit filter time, SCFF = '1', SCFILT = '110'	674	700	747	ns
	Short-circuit filter time, SCFF = '1', SCFILT = '111'	771	800	850	ns

All information provided in this document is subject to legal disclaimers.

© 2026 NXP B.V. All rights reserved.

Table 15. Short-circuit and overcurrent fault electrical characteristics*...continued*

VDD, VCC, VCCREG, VEE in regulation, T_J = −40 to 150 °C, unless otherwise specified. All voltages referenced to GND2. Currents are positive into and negative out of the specified pins.

Symbol	Parameter	Min	Typ	Max	Unit
V_{OC_TH}	Overcurrent voltage threshold, OCTH = '000'	0.225	0.25	0.280	V
	Overcurrent voltage threshold, OCTH = '001'	0.460	0.500	0.540	V
	Overcurrent voltage threshold, OCTH = '010'	0.713	0.75	0.788	V
	Overcurrent voltage threshold, OCTH = '011' (default)	0.950	1.000	1.050	V
	Overcurrent voltage threshold, OCTH = '100'	1.188	1.25	1.313	V
	Overcurrent voltage threshold, OCTH = '101'	1.425	1.5	1.575	V
	Overcurrent voltage threshold, OCTH = '110'	1.663	1.75	1.838	V
	Overcurrent voltage threshold, OCTH = '111'	1.900	2.000	2.100	V
t_{OC_FILT}	Overcurrent filter time, OCFILT = '000'	0.4	0.5	0.6	µs
	Overcurrent filter time, OCFILT = '001'	0.9	1.0	1.1	µs
	Overcurrent filter time, OCFILT = '010'	1.4	1.5	1.6	µs
	Overcurrent filter time, OCFILT = '011'	1.8	2.0	2.2	µs
	Overcurrent filter time, OCFILT = '100'	2.3	2.5	2.7	µs
	Overcurrent filter time, OCFILT = '101'	2.8	3.0	3.2	µs
	Overcurrent filter time, OCFILT = '110'	3.3	3.5	3.7	µs
	Overcurrent filter time, OCFILT = '111'	3.8	4.0	4.2	µs

All information provided in this document is subject to legal disclaimers.

© 2026 NXP B.V. All rights reserved.

9.5 Desaturation protection

Table 16. Desaturation fault management

VDD, VCC, VCCREG, VEE in regulation, T_J = −40 to 150 °C, unless otherwise specified. All voltages referenced to GND2. Currents are positive into and negative out of the specified pins.

Symbol	Parameter	Min	Typ	Max	Unit
Desaturation fault management					
I_{DESAT}	DESAT current source, IDESAT = '00'	−290	−250	−241	µA
	DESAT current source, IDESAT = '01' (default)	−570	−500	−468	µA
	DESAT current source, IDESAT = '10'	−841	−750	−705	µA
	DESAT current source, IDESAT = '11'	−1112	−1000	−935	µA
I_{DESAT_OFF}	DESAT and Segmented Drive blanking discharge current [1]	140	—	—	mA
t_{DESAT_LEB}	DESAT leading edge blanking time, DESAT_LEB = '000'	53	60	88	ns
	DESAT leading edge blanking time, DESAT_LEB = '001'	111	120	149	ns
	DESAT leading edge blanking time, DESAT_LEB = '010'	170	180	211	ns
	DESAT leading edge blanking time, DESAT_LEB = '011' (default)	228	240	273	ns
	DESAT leading edge blanking time, DESAT_LEB = '100'	325	340	376	ns
	DESAT leading edge blanking time, DESAT_LEB = '101'	441	460	500	ns
	DESAT leading edge blanking time, DESAT_LEB = '110'	558	580	623	ns
	DESAT leading edge blanking time, DESAT_LEB = '111'	674	700	747	ns
t_{DESAT_FILT}	Desaturation detection filter time, DESAT_FLT = '00'	64	70	97	ns
	Desaturation detection filter time, DESAT_FLT = '01' (default)	103	110	138	ns
	Desaturation detection filter time, DESAT_FLT = '10'	180	190	221	ns
	Desaturation detection filter time, DESAT_FLT = '11'	275	300	325	ns
V_{DESAT_TH}	Desaturation detection voltage threshold, DESAT_TH = '0000'	0.94	1.00	1.09	V
	Desaturation detection voltage threshold, DESAT_TH = '0001'	1.44	1.50	1.58	V
	Desaturation detection voltage threshold, DESAT_TH = '0010'	1.93	2.00	2.10	V
	Desaturation detection voltage threshold, DESAT_TH = '0011'	2.43	2.50	2.60	V
	Desaturation detection voltage threshold, DESAT_TH = '0100'	2.90	3.00	3.10	V
	Desaturation detection voltage threshold, DESAT_TH = '0101'	3.40	3.50	3.60	V
	Desaturation detection voltage threshold, DESAT_TH = '0110'	3.90	4.00	4.12	V
	Desaturation detection voltage threshold, DESAT_TH = '0111'	4.40	4.50	4.62	V
	Desaturation detection voltage threshold, DESAT_TH = '1000'	4.90	5.00	5.13	V
	Desaturation detection voltage threshold, DESAT_TH = '1001'	5.40	5.50	5.65	V
	Desaturation detection voltage threshold, DESAT_TH = '1010' (default)	5.85	6.00	6.15	V
	Desaturation detection voltage threshold, DESAT_TH = '1011'	6.35	6.50	6.65	V
	Desaturation detection voltage threshold, DESAT_TH = '1100'	6.85	7.00	7.15	V
	Desaturation detection voltage threshold, DESAT_TH = '1101'	7.80	8.00	8.16	V
	Desaturation detection voltage threshold, DESAT_TH = '1110'	8.80	9.00	9.20	V
	Desaturation detection voltage threshold, DESAT_TH = '1111'	9.76	10.0	10.20	V

[1] V_{DESAT} = 8.0 V

All information provided in this document is subject to legal disclaimers.

© 2026 NXP B.V. All rights reserved.

9.6 VCE overvoltage protection

The following table shows the electrical characteristics associated with active VCE clamping.

Table 17. Active V_{CE} clamping electrical characteristics

VDD, VCC, VCCREG, VEE in regulation, T_J = −40 to 150 °C, unless otherwise specified. All voltages referenced to GND2, unless otherwise specified. Currents are positive into and negative out of the specified pins.

Symbol	Parameter	Min	Typ	Max	Unit
VCE clamping operation					
V_{CECL_TH}	VCE clamping threshold (rising edge) [1]	2.125	2.50	2.875	V
$V_{CECL_TH_HYS}$	VCE clamp threshold hysteresis	0.300	0.410	0.520	V
t_{VCECL}	VCE clamp intervention time	—	40	50	ns
t_{VCECR}	VCE clamp intervention release time (TIME_2 = 1) [2]	97	100	117	ns
	VCE clamp intervention release time (TIME_2 = 0) [2]	194	200	235	
t_{VCECR_MAX}	Maximum VCE clamp intervention release time	970	1000	1060	ns
Segmented drive operation					
I_{VCESEN}	VCE sense current source for segmented drive	−25	−20	−17	mA
t_{segdrv_filt}	Segmented drive deglitch filter	60	80	100	ns
$t_{SEGDRVDLY}$	Segmented drive activation delay, SEGDRVDLY = '000' (default)	—	0	—	ns
	Segmented drive activation delay, SEGDRVDLY = '001'	14	20	46	ns
	Segmented drive activation delay, SEGDRVDLY = '010'	34	40	67	ns
	Segmented drive activation delay, SEGDRVDLY = '011'	53	60	88	ns
	Segmented drive activation delay, SEGDRVDLY = '100'	73	80	108	ns
	Segmented drive activation delay, SEGDRVDLY = '101'	92	100	129	ns
	Segmented drive activation delay, SEGDRVDLY = '110'	111	120	149	ns
	Segmented drive activation delay, SEGDRVDLY = '111'	131	140	170	ns
V_{SEGDRV_TH}	Segmented drive voltage threshold, SEGDRV_TH = '000' [3]	2.85	3.00	3.15	V
	Segmented drive voltage threshold, SEGDRV_TH = '001' [3]	3.80	4.00	4.20	V
	Segmented drive voltage threshold, SEGDRV_TH = '010' [3]	4.75	5.00	5.25	V
	Segmented drive voltage threshold, SEGDRV_TH = '011' (default) [3]	5.70	6.00	6.30	V
	Segmented drive voltage threshold, SEGDRV_TH = '100' [3]	6.65	7.00	7.35	V
	Segmented drive voltage threshold, SEGDRV_TH = '101' [3]	7.60	8.00	8.40	V
	Segmented drive voltage threshold, SEGDRV_TH = '110' [3]	8.55	9.00	9.45	V
	Segmented drive voltage threshold, SEGDRV_TH = '111' [3]	9.50	10.0	10.5	V
t_{SSD_SEG} (TIME_2 = 1)[2]	Soft shutdown time for SEGDRV SSD	330	340	350	ns
t_{SSD_SEG} (TIME_2 = 0)[2]	Soft shutdown time for SEGDRV SSD	620	640	680	ns

[1] Referenced to VEE
[2] TIME_2 is Timer scaling bit of MODE1 register
[3] Referenced to GND2

All information provided in this document is subject to legal disclaimers.

© 2026 NXP B.V. All rights reserved.

9.7 Power device overtemperature

Table 18 shows the electrical characteristics specific to the external power device overtemperature detection block.

Table 18. Power device overtemperature electrical characteristics

VDD, VCC, VCCREG, VEE in regulation, T_J = −40 to 150 °C, unless otherwise specified. All voltages referenced to GND2. Currents are positive into and negative out of the specified pins.

Symbol	Parameter		Min	Typ	Max	Unit
t_{OT_FILT}	IGBT overtemperature shutdown fault filter time		1.9	2.0	2.1	ms
t_{OTW_FILT}	IGBT overtemperature warning fault filter time		1.9	2.0	2.1	ms
Current source when TISNS = '1'						
I_{OT}	IGBT temperature sense current reference, ITSNS = '00'	[1]	−0.2625	−0.25	−0.2375	mA
	IGBT temperature sense current reference, ITSNS = '01'	[1]	−0.525	−0.500	−0.475	mA
	IGBT temperature sense current reference, ITSNS = '10'	[2]	−0.7875	−0.750	−0.7125	mA
	IGBT temperature sense current reference, ITSNS = '11' (default)	[3]	−1.050	−1.000	−0.950	mA
I_{OT_TVAR}	Sense current variation with temperature		−1.5	—	1.5	%
TSENSEA offset settings						
T_{OSET}	TSENSEA GND offset, TOFST = '00'	[4]	−0.006	0.0	0.006	V
	TSENSEA GND offset, TOFST = '01'	[4] [5]	0.477	0.50	0.507	V
	TSENSEA GND offset, TOFST = '10'	[4] [5]	0.968	1.000	1.008	V
	TSENSEA GND offset, TOFST = '11'	[4] [5]	1.467	1.500	1.517	V

[1] $0 \le V_{TSENSEA} \le 4.0$ V
[2] $0 \le V_{TSENSEA} \le 3.9$ V
[3] $0 \le V_{TSENSEA} \le 3.75$ V
[4] Includes offset error specified at ± 1 mV
[5] Includes gain error specified at ± 1 %

9.8 IC overtemperature

Table 19. IC overtemperature electrical characteristics

VCC, VCCREG in regulation, T_J = −40 to +150 °C, unless otherwise specified. All voltages referenced to GND2. Currents are positive into and negative out of the specified pins.

Symbol	Parameter		Min	Typ	Max	Unit
$V_{FTSENSEIC}$	Temperature sense diode forward voltage	[1]	3.30	3.42	3.54	V
$R_{TSENSEIC}$	Temperature coefficient of sense diode	[2]	−2.10	−2.00	−1.90	LSB/°C
Overtemperature filter time of IC						
$t_{OTICfilt}$	Overtemperature filter time of IC		16	20	24	µs

[1] Junction temperature = 25 °C
[2] Guaranteed by design

All information provided in this document is subject to legal disclaimers.

© 2026 NXP B.V. All rights reserved.

9.9 AMUX and ADC electrical characteristics

Table 20. AMUX and ADC electrical characteristics

VDD, VCC, VCCREG, VEE in regulation, T_J = −40 to 150 °C, unless otherwise specified. All voltages referenced to GND2. Currents are positive into and negative out of the specified pins. 0 V ≤ $V_{TSENSEA}$ ≤ VREF, 0 V ≤ V_{AMUXIN} ≤ VREF, VCC_{UV_TH} ≤ V_{VCC} ≤ 25 V, Z_{IN} ≤ 10 K

Symbol	Parameter		Min	Typ	Max	Unit
C_{AMUXIN}	AMUXIN input capacitance	[1]	—	4.5	8.0	pF
$AMUXIN_{LK}$	AMUXIN input leakage current	[2]	−2.0	—	2.0	µA
$C_{TSENSEA}$	TSENSEA input capacitance	[1]	—	4.5	8.0	pF
$I_{TSENSEA_LK}$	TSENSEA input leakage current	[3]	−2.0	—	2.0	µA
t_{conv}	ADC conversion time	[4]	—	3.0	5	µs
VCC_{ACC}	VCC measurement accuracy (with 30x attenuation)	[5]	−3.0	—	+3.0	%
$VCCREG_{ACC}$	VCCREG measurement accuracy (with 30x attenuation)	[6]	−3.0	—	+3.0	%
VEE_{ACC}	VEE measurement accuracy (with 15x attenuation)	[7]	−3.0	—	+3.0	%
V_{OS}	AMUX GND offset, AMUXINOS = '00'	[8]	–0.006	0.0	0.006	V
	AMUX GND offset, AMUXINOS = '01'	[8] [9]	0.477	0.50	0.507	V
	AMUX GND offset, AMUXINOS = '10'	[8] [9]	0.968	1.000	1.008	V
	AMUX GND offset, AMUXINOS = '11'	[8] [9]	1.467	1.500	1.517	V
E_{DNL}	Differential linearity error	[10] [11][12]	< –1	—	1.0	LSB
E_{INL}	Integral linearity error (best fit)	[11][13][12]	−1.5	—	1.5	LSB
E_{ZOE}	Zero offset error	[11][14][12]	−2.0	—	2.0	LSB
TE	ADC total error	[11][15][16][12]	−3.0	—	3.0	LSB
TE_{TVAR}	ADC total error variation with temperature	[11][1][12]	−1.5	—	1.5	LSB
E_{scale}	Scale factor error	[11][17][12]	−1.0	—	1.0	LSB

[1] Guaranteed by design
[2] 0 ≤ V_{AMUXIN} ≤ VREF
[3] 0 ≤ $V_{TSENSEA}$ ≤ VREF, TISNS_EN = 0
[4] Z_{in} ≤ 10 kΩ
[5] VCC_{UV_TH} ≤ V_{VCC} ≤ 25 V
[6] $VCCREG_{UV_TH}$ ≤ V_{VCCREG} ≤ 25 V
[7] −15 V ≤ V_{VEE} ≤ –1 V, the ± 2 LSB ADC Zero specification adds an effective ± 30 mV offset
[8] Includes offset error specified at ± 1 mV
[9] Includes gain error specified at ± 1 %
[10] Deviation in code width from the ideal 1LSB code width. No missing codes.
[11] Testing is performed without PWM signal switching in static operation.
[12] ADC performance is guaranteed by design up to 500 µA total injected current in AMUXIN/TSENSEA pin
[13] Maximum deviation of a transition point from the corresponding point of the ideal transfer curve, with the measured offset and gain errors zeroed.
[14] Difference between the first measured transition point (lowest in voltage) and the first ideal transition point.
[15] 0 ≤ VAMUXIN & VTSENSEA < VREF with AMUXRNG = 0 and AMUXINOS = '00'; VCCUV_TH ≤ VCC ≤ 25 V; Zin ≤ 10 kΩ
[16] This error does not take VREF accuracy into account.
[17] Difference between the ideal slope between zero and full-scale and the actual slope between the measured zero point and full-scale.

All information provided in this document is subject to legal disclaimers.

© 2026 NXP B.V. All rights reserved.

9.10 LV/HV domain communications

Table 21. LV/HV domain communications

VDD, VCC, VCCREG, VEE in regulation, T_J = −40 to +150 °C, unless otherwise specified. All voltages referenced to GND1. Currents are positive into and negative out of the specified pins.

Symbol	Parameter		Limit value			Unit
			Min	Typ	Max	
Low voltage to high voltage communications						
$t_{WDrefresh}$	LV domain watchdog refresh interval		189	200	232	µs
$t_{WDtimeout}$	Watchdog timeout, WDTO = '00'	[1]	247	260	294	µs
$t_{WDtimeout}$	Watchdog timeout, WDTO = '01'	[2]	480	500	541	µs
$t_{WDtimeout}$	Watchdog timeout, WDTO = '10'	[3]	965	1000	1056	µs
$t_{WDtimeout}$	Watchdog timeout, WDTO = '11'	[4]	1935	2000	2086	µs

[1] Minimum SPI freq = 450 kHz
[2] Minimum SPI freq = 90 kHz
[3] Minimum SPI freq = 35 kHz
[4] Default minimum SPI freq = 15 kHz

All information provided in this document is subject to legal disclaimers.

© 2026 NXP B.V. All rights reserved.

10 Functional description

10.1 Device overview

The GD3160 is designed for a wide range of IGBT/SiC voltage ratings. Its logic interface and feedback signals are galvanically isolated from the high-voltage circuitry that directly drives the IGBT gate and monitors its temperature sense, DESAT, CLAMP, and current sense pins.

The GD3160 possesses two isolated domains, each with its own GND reference. Control and fault signals are transmitted between the non-isolated, low-voltage domain (LV domain, facing the MCU) and the isolated, high-voltage domain (HV domain, facing the power device) via magnetic coupling. GND1 must be connected to the logic controller's GND. GND2 must be connected to the power device emitter/source.

Pins 1 through 16 are connected to the low-voltage domain. These pins provide interface to all the control, programming, fault monitoring and fail-safe features. A power supply connected to the VSUP or VDD pins provide power for the GD3160's low-voltage domain. The GD3160 contains either a 3.3 V or 5.0 V regulator determining the low-voltage logic level used, depending on the part number ordered.

Pins 17 through 32 are connected to the high-voltage domain. These pins provide the interface to the IGBT/SiC gate, its power supplies and terminals (collector sense, temperature sense and current sense). A power supply connected to the VCC pin provides power for the GD3160's high-voltage domain.

VCC and VEE are the positive and negative power supplies used to charge and discharge the IGBT/SiC gate. VCCREG is the output of a post regulator, providing the positive gate supply voltage. This regulator may be used to alleviate VCC power supply requirements and minimize positive supply voltage variation when multiple gate voltage supplies are generated from a single source.

The gate-drive stage consists of three transistors and a current source. The GH transistor is a high-current pullup (gate charging) transistor connected between VCCREG and the GH pin. Pins GL and AMC are separate transistors that provide gate discharge paths. GL acts as the primary turn-off path with an external resistor used to control discharge current. The AMC pin directly monitors the gate voltage and provides an active Miller clamp, which holds the IGBT/SiC gate at the lowest gate supply while Off. The GH, GL, and AMC transistors are capable of currents up to 15 A for 2.0 µs. There is also a soft shutdown current source in parallel with the GL transistor, which provides a slower gate discharge during a fault condition. Fault conditions may also trigger a two-level turn-off (2LTO), which decreases the IGBT's/SiC gate voltage while the possible fault is being validated. Reducing the gate voltage limits the maximum fault current and thereby reduces the safe operating area stress on the IGBT/SiC.

The GD3160 can be used with or without a negative gate drive voltage. Negative gate voltage is often used to ensure an IGBT/SiC is kept off when its opposing IGBT/SiC is turning on. However, using a negative supply increases gate drive losses and increases gate-drive power supply complexity. Using a low impedance turn-off circuit (such as the integrated AMC feature) is another way to alleviate or eliminate the problem of dV/dt induced turn on.

By monitoring the IGBT/SiC collector-emitter voltage through external circuitry, the GD3160 provides two critical protections and reports the VCE status:

1. When the IGBT/SiC is commanded on, its V_{CE} should be only a few volts, at most. A short-circuit condition causes the V_{CE} to exceed its normal on-state voltage. The GD3160's V_{CE} desaturation detection circuitry monitors V_{CE} for this condition.
2. Advanced active clamp techniques used by the GD3160 turn the gate Off at a reduced, controlled current when excessive V_{CE} is present. Reducing the gate discharge current reduces the collector-emitter overshoot, improves clamping tolerance, and reduces the size of the Zeners.
3. The VCE state may be reported through INTA, for precision motor control applications.

All information provided in this document is subject to legal disclaimers.

© 2026 NXP B.V. All rights reserved.

The current sense pin, ISENSE, can be used to monitor the sense cells of any power device with a current mirror, enabling quicker detection (when compared to desaturation detection) in response to a severe short-circuit or overcurrent condition.

The GD3160 also monitors power device temperature via temperature sense diodes, NTC, or PTC resistors and offers user-programmable overtemperature warning and shutdown. The temperature data or status may be reported via SPI. The GD3160's AMUXIN pin also allows measurement of other system parameters from the HV domain. These, as well as the power device temperature, may be reported through the SPI interface, or provided as a duty cycle encoded signal at the AOUT pin.

The GD3160 reports faults and status in multiple ways. The active-low INTB and INTA pins allow exclusive reporting of faults on either channel, allowing prioritization in the reported faults. Additionally, INTA may be configured instead for real-time VGE or VCE reporting for precision motor control applications. The SPI can also report fault details, as well as all status and configuration information.

All information provided in this document is subject to legal disclaimers.

© 2026 NXP B.V. All rights reserved.

10.2 State diagram

Figure 4 shows the power-up and power-down behavior and how the GD3160 transitions from state to state. The Normal mode is the only state in which the PWM pin directly controls IGBT's gate.

The PWM pin need not be Logic 0 to enter the Configuration mode, although this is highly recommended. When entering Normal mode from any state, the GD3160 immediately responds to the state of the PWM pin. A rising edge of PWM is not needed to re-enable PWMing.

10.2.1 Main domain state diagram

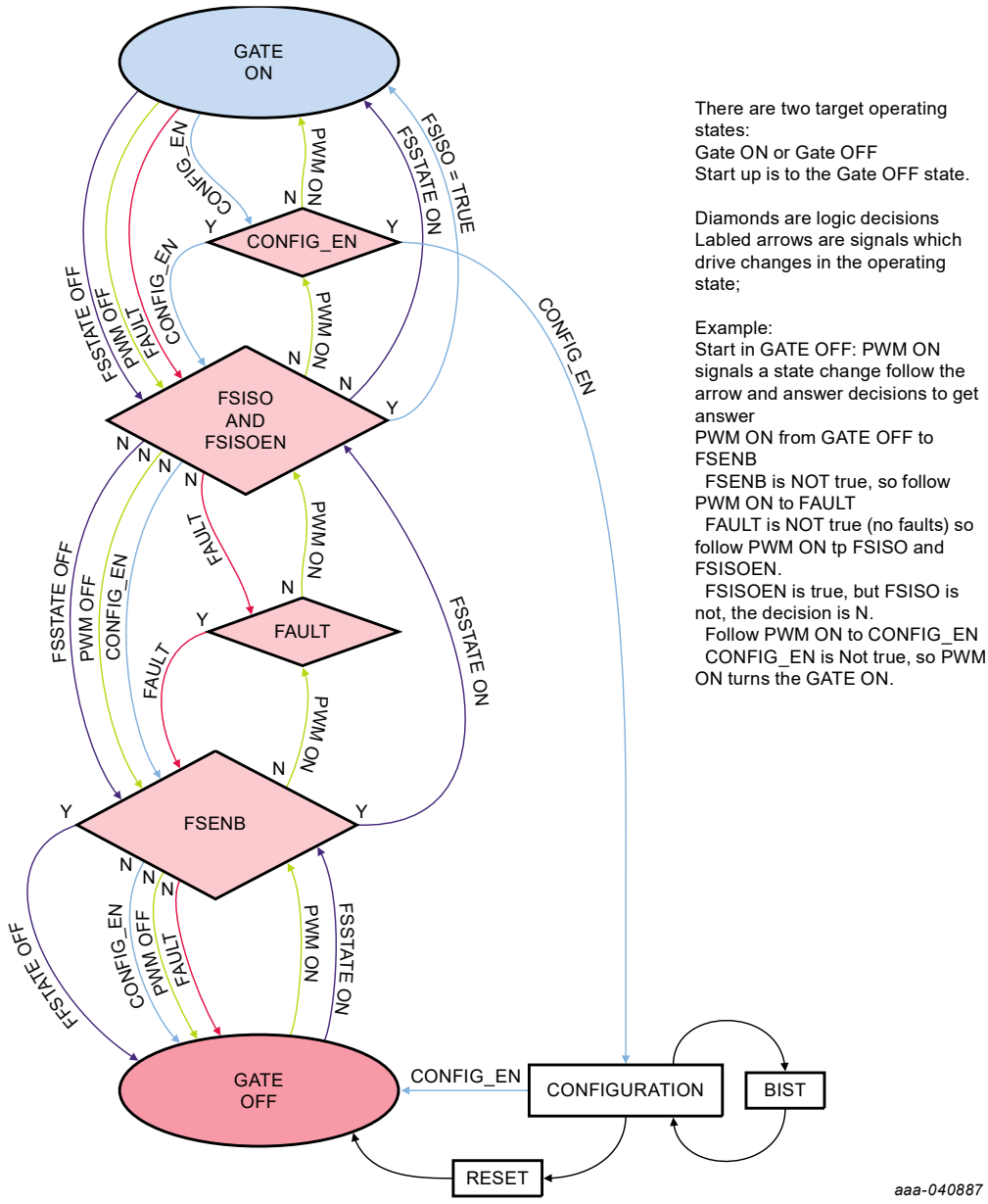

Figure 4. Main domain operating modes

All information provided in this document is subject to legal disclaimers.

© 2026 NXP B.V. All rights reserved.

11 Functional block operation

11.1 Power management

11.1.1 Introduction

Because the GD3160 has integrated signal isolation, it has isolated ground references (GND1 and GND2) for both the low-voltage domain and the high-voltage domain. Ground reference for the low-voltage, non-isolated pins (pins 1 to 16) is GND1. Specifications use GND1 terminal as the reference pin for all low-voltage pins. GND2 is the reference for all isolated pins (pins 17 to 32).

VSUP (or VDD/VSUP) provides power for the low-voltage domain, which contains all the non-isolated circuitry. When power is provided by VSUP, an internal regulator provides 3.3 V or 5.0 V at VDD. The VDD regulator is not intended to power other external circuitry. In this configuration, the VDD pins of different GD3160's should not be connected together.

The GD3160 is available in two options: VDD of 3.3 V or 5.0 V. The two options are desired to allow interfacing to MCUs with 3.3 V or 5.0 V I/O.

- If VDD is 3.3 V, then the user must supply VSUP with a voltage source 4.5 V or greater, usually from a battery in a vehicle or a 5 V post-regulated supply. In this case, power for VDD is always derived from VSUP; an external VDD supply is not allowed. The MGD3160AM315EK, MGD3160AM318EK, MGD3160AM335EK, or MGD3160AM318EK cannot be powered exclusively by VDD = 3.3 V.
- If VDD is 5.0 V, the IC can be powered from a single voltage source at VSUP (usually from a vehicle battery or other post-regulated source). In this case, VDD is derived from VSUP. With 5.0 V VDD, the IC may also be powered from a single 5.0 V source. In this case, VSUP and VDD must be connected together on the PCB. This disables and bypasses the internal VDD regulator as the VSUP never surpasses $VSUP_{UV_TH}$.

The isolated circuitry (on the high voltage domain) is powered by the VCC supply, which must be referenced to GND2. An on-board regulator (VCCREG) provides the option of post regulating the VCC supply. If this post regulator is not used, the VCC and VCCREG pins should be connected together on the PCB.

The GD3160's GND2 terminal should be connected to the IGBT's emitter sense terminal. A direct connection to the emitter is preferred.

The GD3160 can be used with or without a negative gate drive supply. If this supply is desired, the negative supply must be connected to the VEE pin and referenced to GND2. If it is not needed, the VEE pin must be connected to the GND2 pin. Each power management block also includes a 50 MHz clock for each voltage domain's logic.

11.1.2 Power sources and regulators

The primary power supplies and voltage regulators and their uses are shown in the following table.

Table 22. Power supplies and their functions

Power supply name	Purpose	Nominal voltage	Reference mode	Maximum current	Externally supplied or internally generated
VSUP	LV domain power source	Vehicle battery	GND1	—	External
VDD	3.3 V or 5.0 V regulator for internal use	5.0 V (GD3160EK) 3.3 V (GD3160A3EK)	GND1	—	Internally derived from VSUP 5.0 V can be provided externally
VCC	HV domain power source	17 V	GND2	—	External
VCCREG	Positive gate supply	15 V	GND2	100 mA	External/Internal
VEE	Negative gate supply	0 V, –3.0 or –8.0 V	GND2	—	External
VREF	Internal 5.0 V regulator that can supply 20 mA to external circuits	5.0 V	GND2	20 mA	Internal, from VCC

All information provided in this document is subject to legal disclaimers.

© 2026 NXP B.V. All rights reserved.

11.1.3 Recommended external capacitance

Table 23 provides guidelines for the external capacitance used for the supplies and integrated regulators.

Table 23. Recommended external capacitors

Symbol	Description	Min	Typ	Max	Unit	Notes/conditions
C_{VSUP}	External capacitance VSUP-GND1	0.47	1	15	µF	For VDD regulator active (VSUP and VDD not connected): recommended separate capacitors (all MLCC, X7R) for best EMC performance: 10.0 µF and 0.1 µF in parallel. For VDD regulator inactive (VSUP-VDD connected): recommended separate capacitors (all MLCC, X7R) for best EMC performance: 1.0 µF and 0.1 µF in parallel.
C_{VDD}	External capacitance VDD-GND1	0.47	1.1	2	µF	Recommended 1 µF (MLCC, X7R) for best EMC performance.
C_{VCC}	External capacitance VCC-GND2	4.7	—	10	µF	When VCC is not connected to VCCREG:recommended separate capacitors (all MLCC, X7R) for best EMC performance: 4.7 µF and 0.1 µF in parallel.
C_{VCCREG}	External capacitance VCCREG-GND2	4.7	—	40	µF	Recommended separate capacitors (all MLCC, X7R) for best EMC performance: 4 µF x 4.7 µF and 0.1 µF in parallel.
C_{VREF}	External capacitance VREF-GND2	0.47	1	2	µF	Recommended for best EMC performance 1.0 µF MLCC, X7R.
C_{VEE}	External capacitance VEE-GND2	4.7	—	10	µF	Recommended separate capacitors (all MLCC, X7R) for best EMC performance: 4.7 µF and 0.1 µF in parallel.

All information provided in this document is subject to legal disclaimers.

© 2026 NXP B.V. All rights reserved.

11.1.4 OV and UV threshold description

The GD3160 has overvoltage and undervoltage monitoring for its key power supplies: VSUP, VDD, VCC, VCCREG, and VREF. The exception to this rule is that VCCREG has no overvoltage monitoring because the VCC overvoltage circuit provides that protection. Some of the undervoltage or overvoltage circuits are used to control internal signals and do not create faults. For example, the VSUP undervoltage circuit does not create a fault; it is used to enable/disable the VDD regulator.

The over and undervoltage threshold specifications are defined in Figure 5.

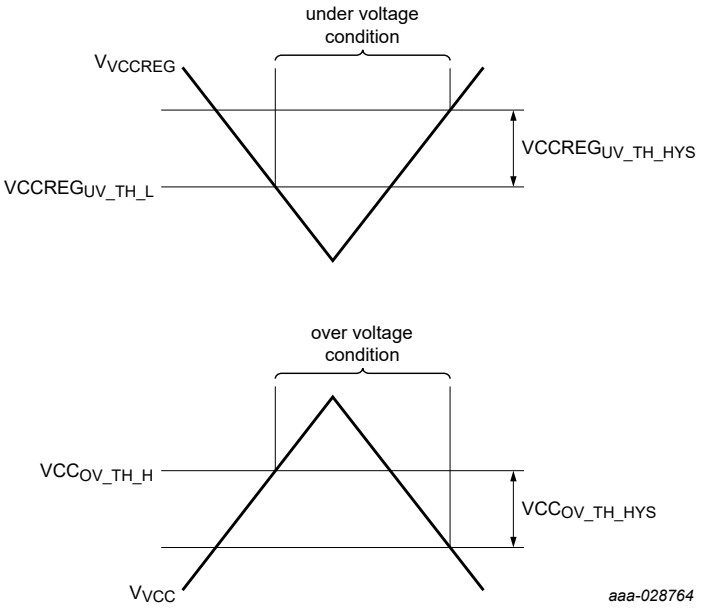

Figure 5. Definitions of over and undervoltage hysteresis

If V_{VCC} exceeds VCC_{OV_TH}, the IGBT is latched off, and the fault bit is latched and reported via SPI and the INTA/INTB pins. LV/HV domain communications continue to run.

11.1.5 Power supply sequencing of the low-voltage domain

When voltage is applied to the VSUP (or VSUP/VDD if the pins are connected) at power up, internal logic supplies of the low-voltage domain turn on with the rise of VSUP. Once VSUP exceeds 4.5 V (for MGD3160AM3xxEK, VDD option = 3.3 V) or $VSUP_{UV_TH}$ (for MGD3160AM5xxEK, VDD option = 5 V), the VDD regulator is enabled.

When VDD exceeds VDD_{UV_TH}, the low-voltage domain begins periodically sending a REQADC command (Request ADC) and monitoring the high-voltage domain's response. When the low-voltage domain receives a valid response from the high-voltage domains, the low-voltage domain enters Normal mode state and is able to PWM the IGBT.

The power-up timing diagrams of the low-voltage domain are shown below. The two configurations shown are with and without the VSUP and VDD pins connected on the circuit board.

All information provided in this document is subject to legal disclaimers.

© 2026 NXP B.V. All rights reserved.

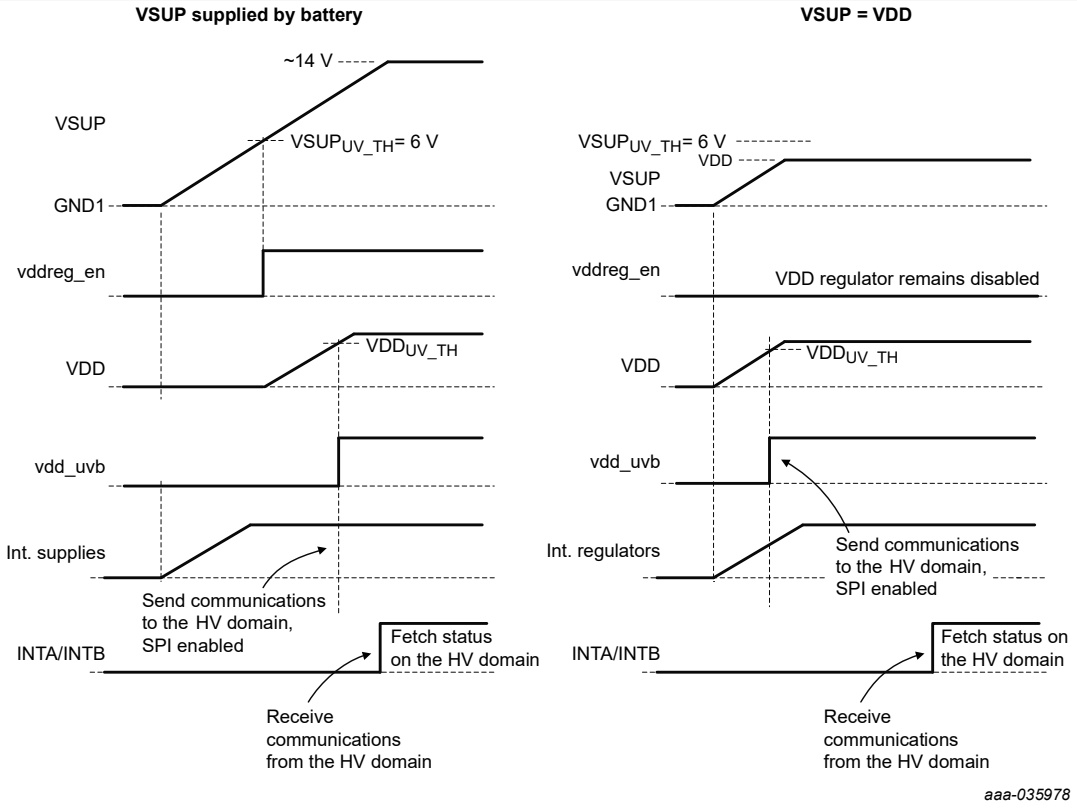

Figure 6. Power supply sequencing at power up, low-voltage domain (5 V option)

When VSUP voltage falls below VDD_{UV_TH} (for MGD3160AM3xxEK, VDD option = 3.3 V) or $VSUP_{UV_TH}$ (for MGD3160AM5xxEK, VDD option = 5 V) at power down, the VDD regulator is disabled. When VDD equals VDD_{UV_TH} or below, the low-voltage domain no longer sends or receives SPI messages. Once VDD voltage falls below VDD_{UV_TH}, the low-voltage domain no longer sends messages to or receives messages from the high-voltage domain. In addition, the low-voltage domain activates INTA or INTB as the internal power supplies allow.

The low-voltage domain power down timing diagrams are shown in Figure 7.

All information provided in this document is subject to legal disclaimers.

© 2026 NXP B.V. All rights reserved.

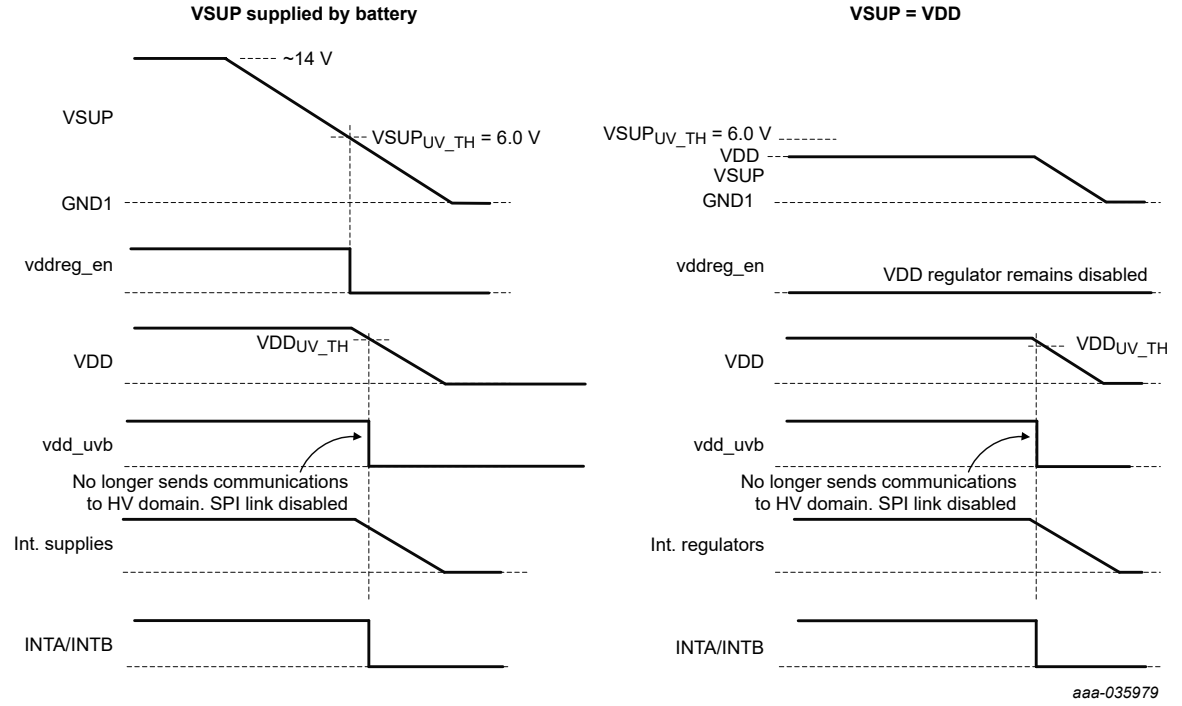

Figure 7. Power supply sequencing at power down, low-voltage domain

11.1.6 Power supply sequencing of the high-voltage domain

When voltage is applied to the VCC pin at power up, the internal logic supplies power up as VCC increases. When V_{VCC} exceeds VCC_{UV_TH} and the internal logic supplies are in regulation, the VCCREG and VREF regulators are enabled.

Once V_{VCCREG} exceeds $VCCREG_{UV_TH}$ and V_{VREF} exceeds $VREF_{UV_TH}$, the high-voltage domain responds to PWM signals and DATA_IN messages. In addition, the high-voltage domain begins reporting the fault status via the INT_VGE communications link.

When VREF is in an undervoltage condition at power up (either slow to rise or too heavily loaded), the IGBT's gate is turned off and the high-voltage domain DATA communication remains disabled. In this VREF_UV condition, OC, DESAT and VCC_OV faults are disabled. As the ADC is also disabled, OT and OTW cannot be tripped.

The power-up timing diagram of the high-voltage domain is shown in Figure 8.

All information provided in this document is subject to legal disclaimers.

© 2026 NXP B.V. All rights reserved.

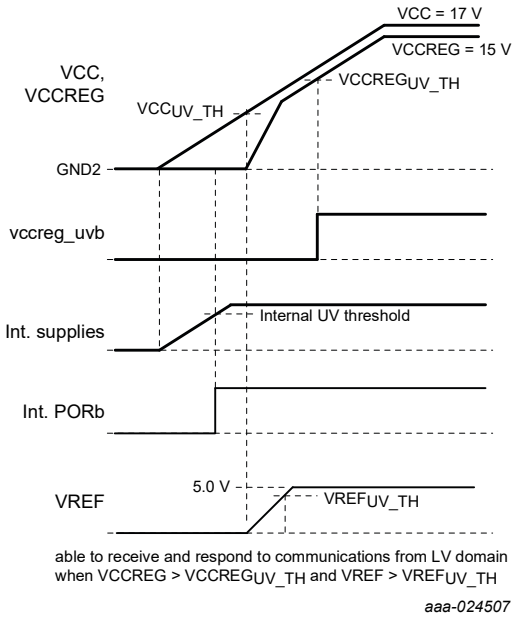

Figure 8. Power supply sequencing at power-up, high-voltage domain

During decreasing VCC supply voltages, the internal logic supplies remain powered until they reach their POR levels. The high-voltage domain continues to respond to PWM or FSSTATE signals until VCCREG falls below $VCCREG_{UV_TH}$. The high-voltage domain continues to respond to DATA_IN messages until the high-voltage domain internal logic supply falls below its POR threshold.

When VREF is in an undervoltage condition after power up (it had been in regulation), the IGBT's gate is turned off (unless FSISO is active high, and had been enabled), the ADC conversions return 000h and LV/HV domain communications remain enabled along with fault reporting via the SPI and via the INTA/INTB pins.

When VCCREG is in an undervoltage condition, the IGBT gate is turned off, unless FSISO is active and enabled. The VCCREG undervoltage fault is reported via the SPI and the INTA/INTB pins (per configuration).

A VCCREGUV fault will also be latched if VCC falls below VCC_{UV_TH} when VCCREGUV fault is masked.

The power-down timing diagram of the high-voltage domain is shown in Figure 9.

All information provided in this document is subject to legal disclaimers.

© 2026 NXP B.V. All rights reserved.

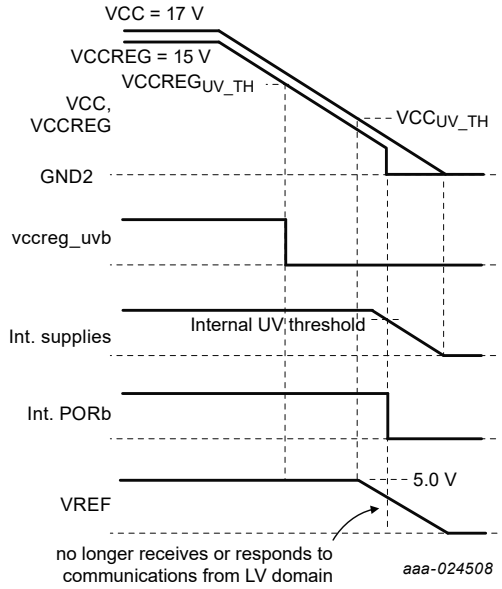

Figure 9. Power supply sequencing at power-down, high-voltage domain

11.1.7 Fault management at power up

The GD3160, in conjunction with the system's control logic, must maintain control of its IGBT's gate during adverse conditions, including power up. This includes the case when the controlling MCU is operating normally, as well as when it is faulted.

The GD3160's role is to maintain control of the IGBT gate during power up and power down and to respond to the logic signals from the control logic once all supplies are in regulation.

A special requirement of the GD3160 is that it must be able to respond to the safing logic and possibly turn on its IGBT even when the system's MCU is not operational. Because the safing logic may not have SPI capability, the safing logic may be incapable of clearing any latched faults that would disallow turning on the IGBT gate. Therefore, at power up, the GD3160 must not latch any false faults that may appear as regulators and references stabilize. It must power up in a non-faulted state if it is not faulted.

To avoid spurious latched faults at power up, faults are ignored until after all the power supplies and regulators (VDD, VCCREG and VREF) are in regulation. For example, at power up, LV/HV domain communication faults and SPI faults are not latched. Faults associated with the IGBT, such as overcurrent, short-circuit, V_{CE} desaturation, are managed similarly. These faults are latched only after power up. In summary, until all supplies are regulation, the IGBT's gate is disabled; after power up, latched faults disable the gate.

A watchdog fault will latch when VSUP, VDD, VCC, or VREF falls below POR threshold voltage levels and exceeds the programmable watchdog timeout duration. See CONFIG6 register.

LV die and HV die registers reset to default values if supplies fall below POR threshold levels, but no watchdog fault is latched if the supply is recovered during the watchdog timeout period.

All information provided in this document is subject to legal disclaimers.

© 2026 NXP B.V. All rights reserved.

11.1.8 High-voltage domain supplies and monitors

Figure 10 provides a block diagram of the high-voltage domain supplies, regulators, and monitoring circuits.

VCC has fixed overvoltage and undervoltage thresholds, with programmable fault report mask capability. VREF has a similar fixed undervoltage threshold and programmable fault report mask capability.

The VCCREG pin integrates a regulator providing a stable and protected positive gate supply to the power device. The output voltage is programmable by VCCREG[2:0], and is protected by a configurable undervoltage threshold, determined by UV_TH[2:0]. Undervoltage behavior is provided by the UV_LATCH bit.

The VEE_OORM bit in the MSK2 register enables/disables the VEE monitoring circuitry. When the fault monitoring is enabled (VEE_OORM = 1), the GD3160 monitors the VEE pin for a VEE out of range. A voltage higher than −1.5 V (nominal) is interpreted as a VEE out of range. The VEE monitoring threshold is not configurable.

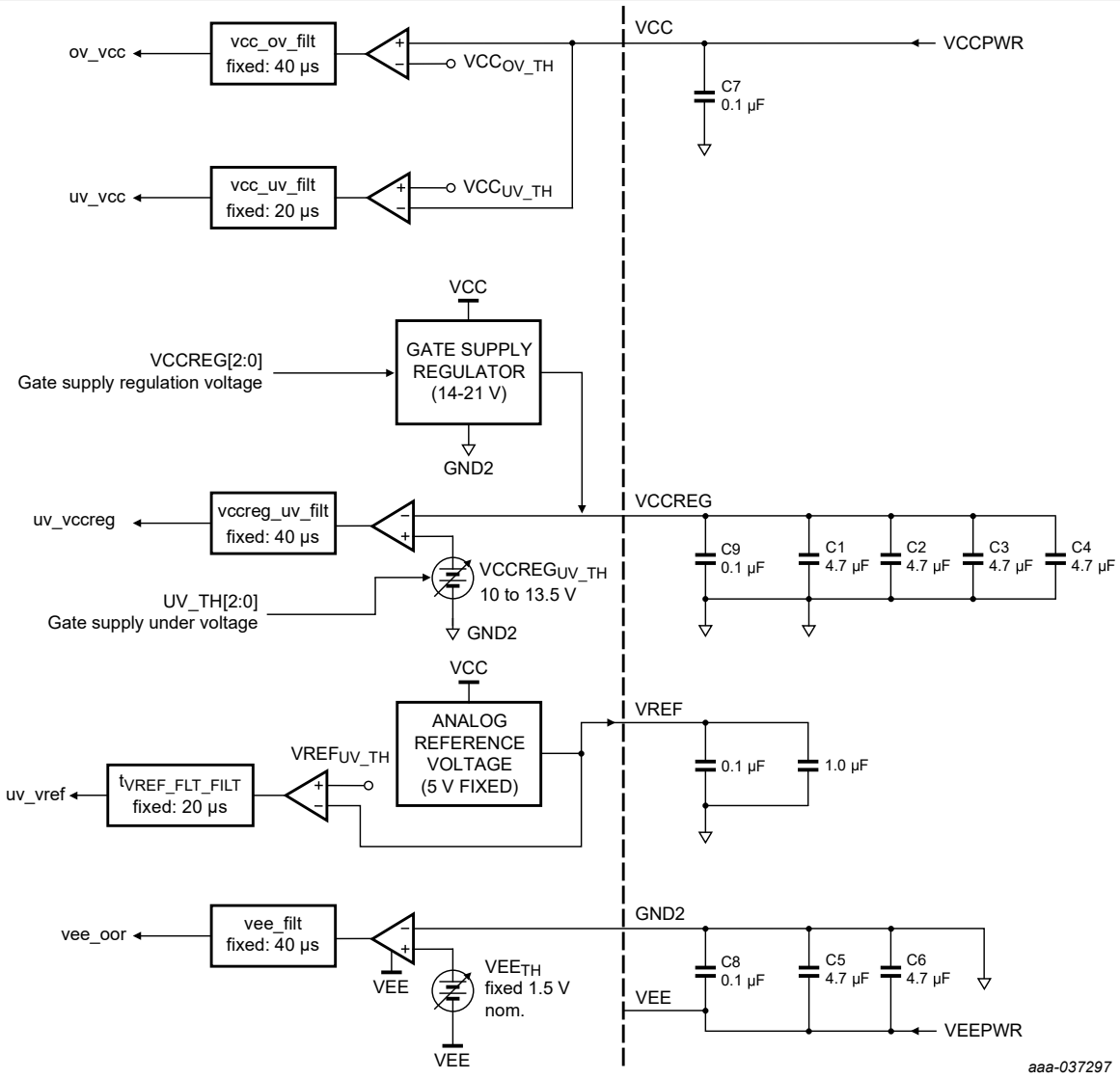

Figure 10. HV domain power supplies, regulation, and monitoring

All information provided in this document is subject to legal disclaimers.

© 2026 NXP B.V. All rights reserved.

11.2 Digital I/Os for control and configuration

11.2.1 Introduction

The control and configuration circuitry consists of the SPI pins and the logic input pins (PWM, PWMALT, FSSTATE, FSENB, and FSISO) for gate control and fail-safe configuration. Together, they control the IC's operating mode and state of the output stage. The FSSTATE, FSENB, and FSISO pins exert control by means of the system's safing logic.

11.2.2 Functional block diagram

Figure 11 shows the basic features of the logic pins. The ESD structures are not shown.

All information provided in this document is subject to legal disclaimers.

© 2026 NXP B.V. All rights reserved.

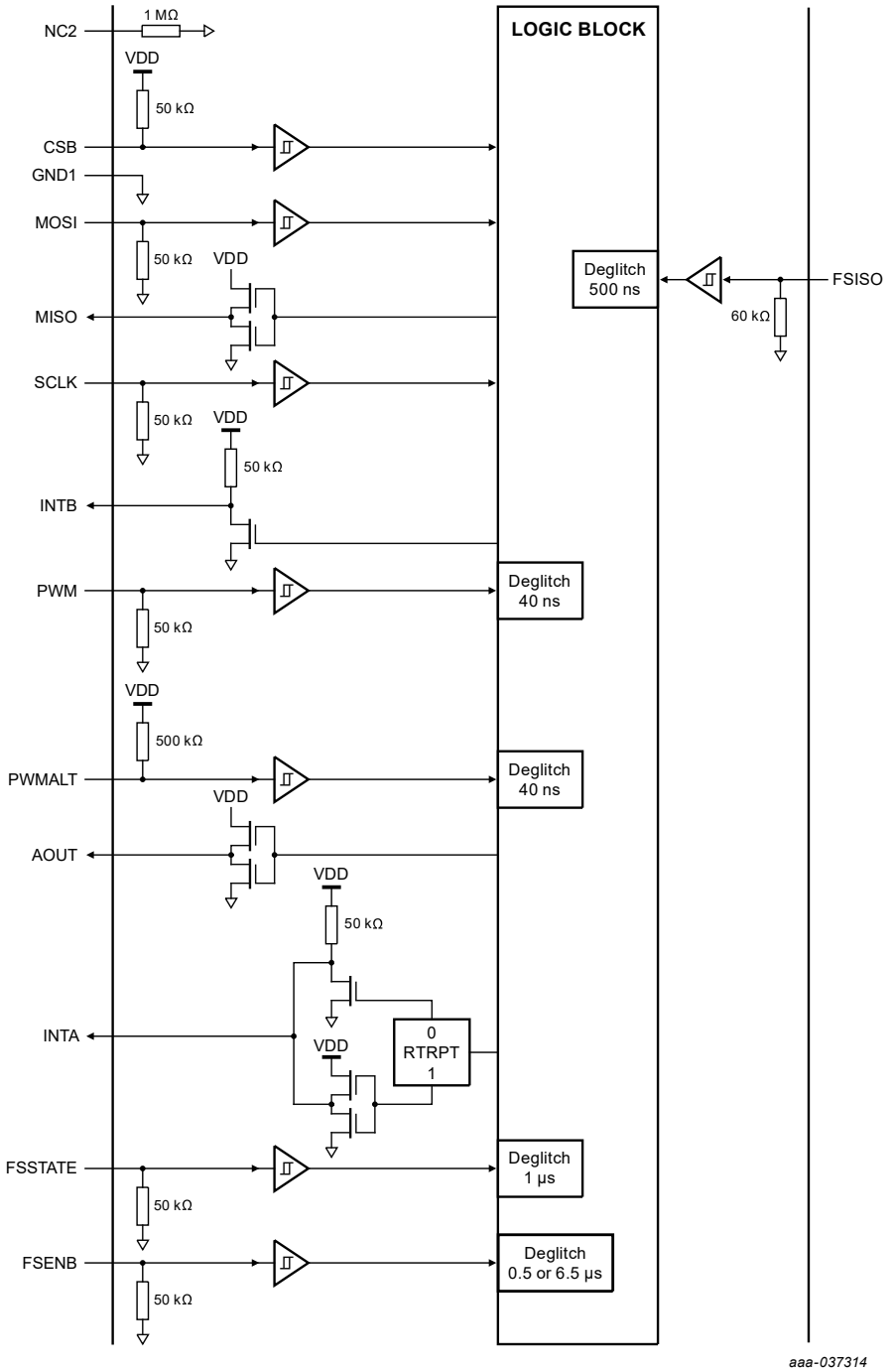

Figure 11. Control and status reporting I/O

All information provided in this document is subject to legal disclaimers.

© 2026 NXP B.V. All rights reserved.

11.2.3 Safing logic pins

The GD3160 has three pins that monitor system-level fail-safe signals. Such fail-safe signals can be created in safing logic that independently monitors the MCU and key system parameters, such as motor torque. When the safing logic detects a system-level fault, its commands can override the MCU and take direct control of the GD3160 operation.

Safing logic may be located in the low-voltage domain, where it is powered by the vehicle battery or a backup power supply derived from the high-voltage domain. The GD3160's FSENB and FSSTATE pins are useful in this architecture: FSENB places the GD3160 into Fail-safe mode, and FSSTATE commands a gate state within Fail-safe mode.

Safing logic may also be located in the high-voltage domain near the power device gate itself. For this architecture, the FSISO pin is useful to command the gate on (MGD3160AM515EK, MGD3160AM518EK, MGD3160AM315EK, or MGD3160AM318EK) or 3-state (MGD3160AM535EK, MGD3160AM538EK, MGD3160AM335EK, or MGD3160AM338EK)) while the system is in Fail-safe mode.

Due to its proximity to the gate and independence from domain communications, FSISO receives higher priority than all PWM, FSENB/FSSTATE, and fault states. This priority is elaborated further in Section 12.6.

11.2.3.1 FSENB and FSSTATE pins

Two safing logic pins in the low-voltage domain, FSSTATE and FSENB, provide an independent means to control the power device's gate during a system-level fault. The FSENB pin alerts the GD3160 to a fail-safe condition, and the FSSTATE pin provides the desired on/off command of the gate in the fail-safe condition.

Because the GD3160 does not respond to its PWM or PWMALT pins when in Fail-safe mode, it no longer has the cross-conduction and dead time protection those pins normally provide. The system's logic must provide cross-conduction protection by ensuring that the high-side and low-side IGBTs are not turned on or switched simultaneously and that sufficient dead time is used when the gates change On/Off state.

The pulse suppression filter at the FSENB pin is relatively long compared to the filters on the other logic pins. This is to ensure that noise does not inadvertently cause an undesired fail-safe condition.

To simplify the safing logic's timing requirements, the filter time for the FSENB is a function of the state of the FSSTATE pin as shown in Figure 12.

If an IGBT fault occurs (HV Die) the system's and the GD3160's priority is to protect the IGBT. Therefore, if an HV Die fault (VCCREG_UV, VCC_OV, OTS, Die2 COMMERR, Die2 WD, OT IGBT, VEE_OOR, VREF UV, RESET MODE on Die2, CLAMP fault, SC, DESAT) is detected, the GD3160 keeps the IGBT OFF regardless of the state of FSSTATE and FSENB.

By default, the INTB pin does not report that the GD3160 is in a Fail-safe state. However, if desired, the GD3160 can be programmed to report its fail-safe status at the INTB pin. The INTBFS bit in the CONFIG3 register is by default Logic 0 and in that setting causes the INTB pin to ignore the Fail-safe state. But when INTBFS = Logic 1, then INTB = 0 when FSENB = 0. See the description of the SPI for additional details. Figure 13 shows how the system exits the Fail-safe state.

All information provided in this document is subject to legal disclaimers.

© 2026 NXP B.V. All rights reserved.

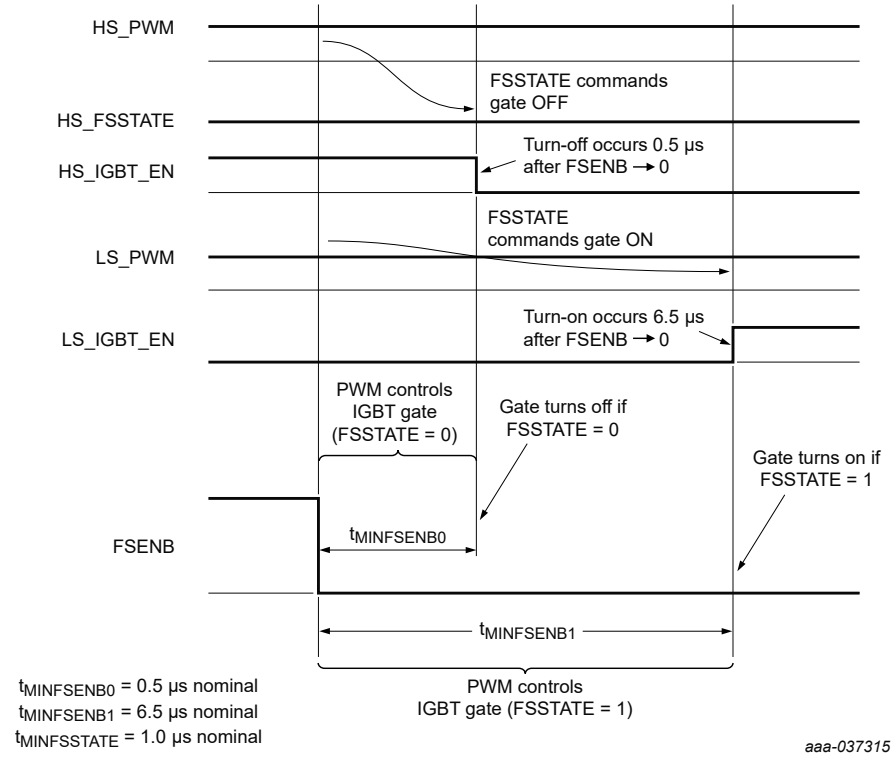

Figure 12. FSENB and FSSTATE filtering when entering a Fail-safe state

To ensure safe transition into PWM control, the delay time for the FSENB is a function of the state of the PWM pins, as shown in Figure 13.

Figure 13 shows the handling of control between FSSTATE and PWM as the system exits the fail-safe state.

If PWM or FSSTATE transitions during the delay time between $t_{MINFSENB0}$ and $t_{MINFSENB1}$, then transitions during the FSENB filter delay time, the PWM control is prioritized and the device immediately moves to follow PWM control. Normal mandatory dead time is in effect with PWM pins, ensuring a safe transition.

If the requested PWM state matches the current state under FSSTATE control, no additional 6 µs delay is added, and PWM control is assumed immediately after $t_{MINFSENB0}$ expires (0.5 µs after FSENB rising edge). In this way, PWM control is prioritized to minimize distortion of the PWM control. Mandatory dead time again ensures safe switching once PWM activity restarts.

Any FSSTATE logic level change within the interval $t_{MINFSSTATE}$ before and $t_{MINFSENB1}$ after FSENB edge change may impact the $t_{MINFSENB0}$ and $t_{MINFSENB1}$ timings.

All information provided in this document is subject to legal disclaimers.

© 2026 NXP B.V. All rights reserved.

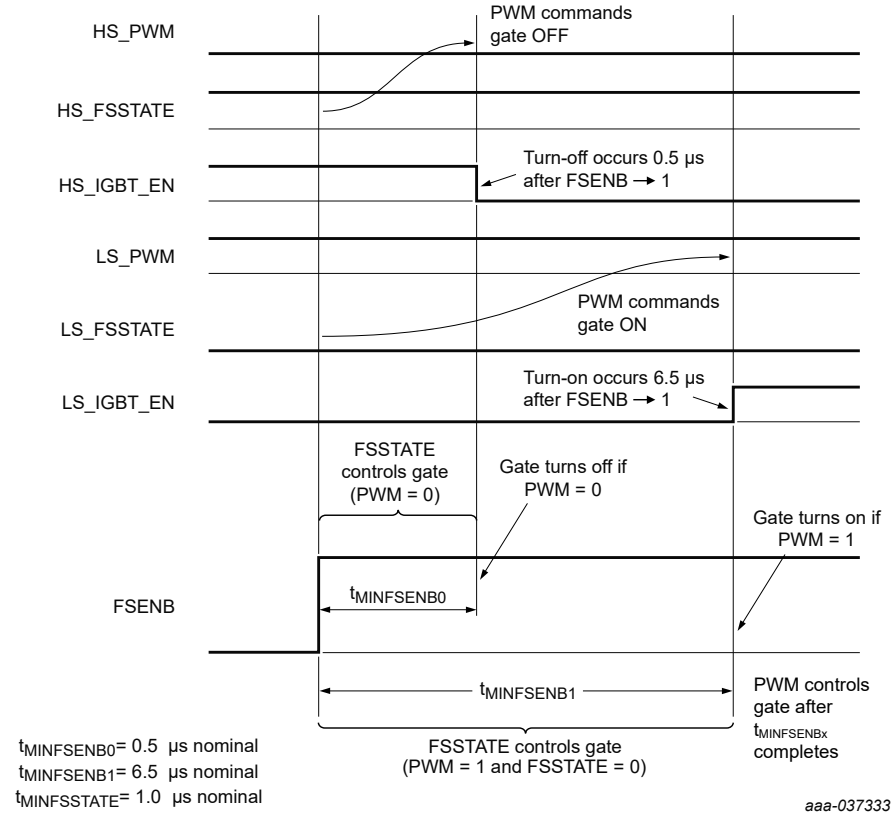

Figure 13. FSENB and FSSTATE filtering when exiting a fail-safe state

11.2.3.2 FSISO pin - Gate ON (MGD3160AM515EK, MGD3160AM518EK, MGD3160AM315EK, or MGD3160AM318EK)

FSISO provides fail-safe turn-on capability from the high-voltage domain. This is useful when the low-voltage domain is inactive and the gate must be turned ON.

Activating the FSISO pin (Logic 1) turns the gate ON, independent of other inputs, and sends INTB low (INTA operation is unchanged).The delay time from FSISO rising edge to the ON state is $t_{FSISOMIN}$.

As a fail-safe control local to the HV domain, FSISO receives the highest priority over all other controls or faults. For example, when the VCCREG (positive gate supply) or VREF are in undervoltage, a logic high at FSISO brings the gate high.

The logic state of FSISO pin and the gate can be read via the STATUS3 register, and INTB is Logic 0 when FSISO is Logic 1. If the FSISO pin is enabled via the FSISOEN bit in the MODE2 register and FSISO is Logic 1, then the gate is driven high (up to VCCREG) regardless of the FSENB and FSSTATE settings.

If this feature is not used, the FSISO pin should be connected to GND2 and the FSISOEN bit in the MODE2 register should be set to Logic 0.

11.2.3.3 FSISO pin - Gate 3-state (MGD3160AM535EK, MGD3160AM538EK, MGD3160AM335EK, or MGD3160AM338EK)

FSISO provides fail-safe 3-state capability from the high-voltage domain. This is useful when the low-voltage domain is inactive and the gate must be 3-state (not driven either high or low). If this option is used, the system integrator must take into account $t_{FSISOMIN}$ to make sure that gate is in 3-state before using external circuitry to control the gate ON or OFF.

All information provided in this document is subject to legal disclaimers.

© 2026 NXP B.V. All rights reserved.

Activating the FSISO pin (Logic 1) 3-states the gate, independent of other inputs, and sends INTB low (INTA operation is unchanged). The delay time from FSISO rising edge to the 3-state is $t_{FSISOMIN}$.

As a fail-safe control local to the HV domain, FSISO receives the highest priority over all other controls or faults. For example, when the VCCREG (positive gate supply) or VREF are in undervoltage, a logic high at FSISO brings the gate tristate.

The logic state of FSISO pin and the gate can be read via the STATUS3 register (3-state will be reported as OFF), and INTB is Logic 0 when FSISO is Logic 1. If the FSISO pin is enabled via the FSISOEN bit in the MODE2 register and FSISO is Logic 1, then the gate is 3-state (GH off, GL off) regardless of the FSENB and FSSTATE settings.

If this feature is not used, the FSISO pin should be connected to GND2 and the FSISOEN bit in the MODE2 register should be set to Logic 0.

11.2.4 SPI pins (CSB, SCLK, MOSI, MISO)

GD3160's SPI pins (CSB, SCLK, MOSI, and MISO) provide configuration and fault/status report capabilities. They are also used to determine the operating state and obtain detailed fault information. The ADC reports its output through the SPI. For SPI circuitry details, see Section 11.13.

11.2.5 PWM and PWMALT pins

During normal operation, the PWM pin controls the ON/OFF state of the output stage. The GD3160 is designed to minimize the turn on and turn off delays, minimize the difference between those delays, and minimize pulse-width jitter.

The PWMALT pin should be connected to the PWM signal that controls the IGBT in the opposite side of the half-bridge. It disallows simultaneously turning on both IGBTs and it enforces a minimum dead time (t_{MIN_DT}) between the logic edges, as shown in Figure 14.

An internal pulldown resistor at PWM and an internal pullup resistor at PWMALT ensure that the output stage is OFF when neither pin is actively driven.

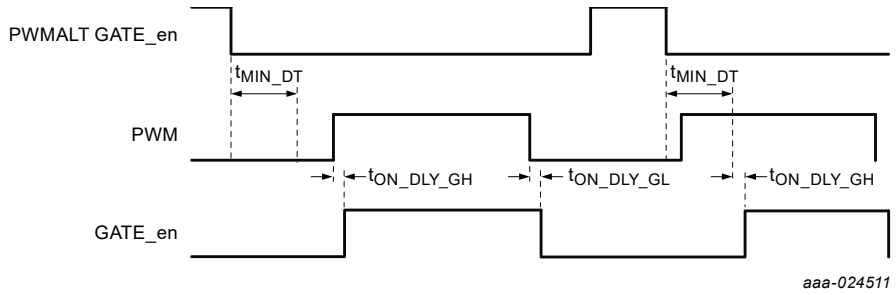

Figure 14. PWM and PWMALT with dead time enforcement

If PWMALT goes high while PWM is already high, then the gate turns off immediately, without inserting t_{min_DT}. If PWM goes high, while PWMALT is already high, a dead time fault will be latched. In fact, t_{min_DT} is only applied on the falling edge of PWMALT, to ensure that the gate does not go high before the programmable dead time t_{min_DT} expires.

All information provided in this document is subject to legal disclaimers.

© 2026 NXP B.V. All rights reserved.

11.3 Gate drive output stage and diagnostics

11.3.1 Introduction

The most prominent components in the output stage are the pullup transistor (GH) and the two pulldown transistors (GL and AMC). A soft shutdown circuit is in parallel with the GL transistor. The gate drive output stage also includes the drivers' level shift circuitry, gate drive buffers and diagnostics circuitry. All drive transistors are power MOSFETs, which allows full rail-to-rail control of the voltage at the IGBT's gate.

11.3.2 Functional block diagram

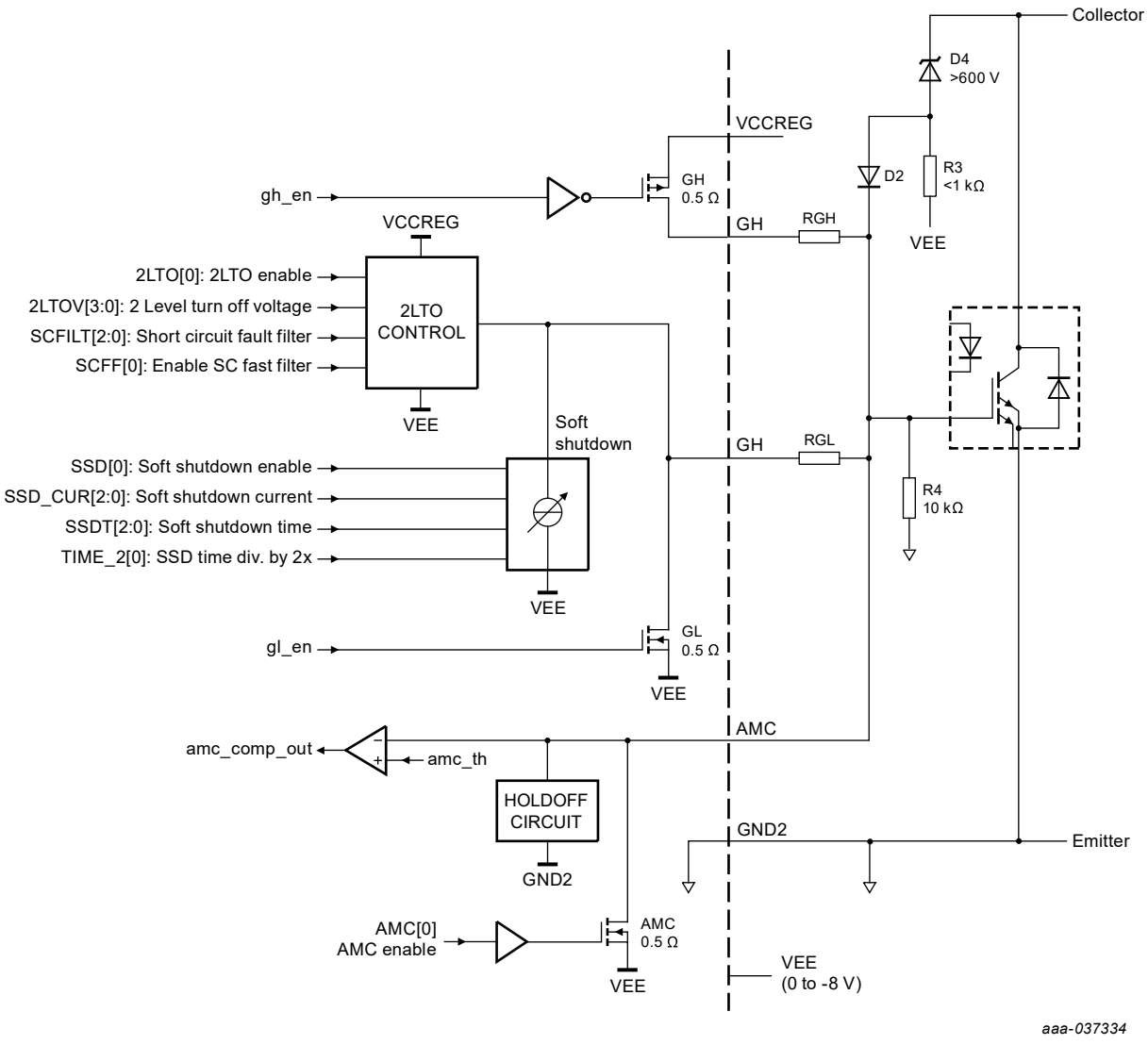

Figure 15. Gate drive output stage block diagram

All information provided in this document is subject to legal disclaimers.

© 2026 NXP B.V. All rights reserved.

11.3.3 Types of gate drive

11.3.3.1 Normal mode turn on and turn off

When the voltage at the PWM pin goes high, the signal is deglitched by an input pulse suppression filter (t_{MIN}). Once the signal is validated, all pulldown transistors (GL, AMC, SSD) are turned off and GH is turned on. V_{CE} desaturation faults are blanked for t_{DESAT_LEB}. Once t_{DESAT_LEB} expires, I_{DESAT} is turned on to monitor the collector-emitter voltage. The SSD (soft shutdown) and the two-level turn-off (2LTO) circuits are not activated during non-faulted switching.

When the voltage at the PWM pins goes low (the same 40 ns deglitch filter is applied) pullup transistor GH is turned off and the primary pulldown transistor, GL, is turned on and the gate resistor in series with the GL pin controls turn-off speed.

11.3.3.2 Soft shutdown

The GD3160 includes integrated soft shutdown (SSD) functionality, which is a current-limited turn-off functionality, used for fault handling and specific turn-off scenarios.

The soft shutdown operation turns the power device gate off more slowly than normal turn-off: this reduces fast or high di/dt in the load current, and reduces VCE overshoot and SOA stress on the power device.

The SSD circuit is connected between the GL and VEE pins. Table 14 and Section 11.13 provide details of the ISSD programming options.

For controlled operation, soft shutdown is usually only run for a fixed time, or until the active Miller clamp can activate. There is a capacity to program the duration (SSDT parameter) and utilize a "fast" mode (TIME_2 configuration bit) for low gate charge devices, like SiC MOSFETs.

Soft shutdown can be enabled or disabled in the MODE1 register. It is recommended that soft shutdown be enabled (set SSD = 1) for all manner of power devices, including IGBTs, SiC MOSFETs, and so on. All power devices benefit from the reduced voltage stress provided by soft shutdown gate current. Soft shutdown is used in many different functions. It is especially required to be enabled (SSD = 1 in the MODE1 register) for the following applications:

- Driving an IGBT (SSD reduces voltage stress, which cannot exceed maximum VCE)
- Driving fast-switching MOSFETs safely (SSD reduces voltage stress during turn-off events)
- Using the overcurrent feature (OCSNS = 1) based on the ISENSE pin. SSD is used to shut down an overcurrent condition.
- Using the segmented drive function (SEGDRV = 1). SSD is used to mitigate potential VCE overvoltage.
- Using the active clamp (ACTCLMP = 1). SSD is used during gate turn-off during VCE overvoltage clamp event.

11.3.3.3 Two-level turn-off

The GD3160 includes a two-level turn-off (2LTO) feature that momentarily reduces the gate voltage and limits the maximum collector current while validating a fault condition.

The 2LTO feature may be enabled or disabled using the 2LTO bit in the MODE1 register, depending on application needs.

The GD3160 must have two-level turn-off enabled (set 2LTO = 1) in the following applications:

- Driving an IGBT (2LTO ideally handles the plateau region while turning off substantial collector current)
- Devices with integrated current mirror (connected to the ISENSE pin)

The 2LTO feature can be useful, but is not absolutely required (may set 2LTO = 0), in the following applications:

All information provided in this document is subject to legal disclaimers.

© 2026 NXP B.V. All rights reserved.

- Driving a SiC MOSFET without integrated current mirror (MOSFETs do not possess the hard plateau that IGBTs do)
- Smaller gate charge devices (roughly QG < 2000 nC). Voltage regulation is not as useful for smaller QG devices, soft shutdown (SSD) might be capable of achieving the fastest turnoff. Empirical testing might be in order to confirm the best settings.

The 2LTO feature may be activated when a high-current fault (e.g. desaturation or short-circuit) is first detected. The 2LTO feature holds the gate at a programmable voltage level for a programmable duration (see 2LTOV and SC_FILT bit settings in the CONFIG2 register) while validating the fault. In this way, the GD3160 provides not only customizable protection thresholds, but also a customizable faulted turn-off sequence appropriate for both the power device and application.

During the 2LTO interval the voltage at the GL pin is initially less than the voltage at the IGBT's gate. This difference in potential and the resistor in series with the GL pin determine how rapidly the gate is discharged to V_{2LTO} and the resultant collector current di/dt. If the fault condition is not validated (for example, marginal detection or lower gate voltage reduced the current) then GD3160 will recharge the gate to full VCCREG gate supply and continue to PWM the gate. Unlike soft shutdown, 2LTO is not a one-way trip. However, to prevent endless looping on a marginal fault detection, if the 2LTO is tripped a second time within one PWM cycle, the fault is considered validated, and the gate is turned off.

11.3.3.4 Active Miller clamp and holdoff

The GD3160 must keep the IGBT in the OFF state when the high-voltage domain is unpowered. It must clamp any leakage currents that might raise the IGBT's gate-emitter voltage to more than the IGBT's threshold voltage. The holdoff circuity connected between the AMC (connected to the gate) and GND2 (connected to the source/emitter) pins limits the voltage to V_{GOFF}.

The gate holdoff circuit is active when the internal logic supply is less than POR. The holdoff circuit is inactive when the high-voltage domain internal power supplies are powered up and in regulation.

At the end of the turn-off transition, V_{GE} falls below AMC_th (~2.0 V greater than VEE). After the AMC turn on filter time, t_{AMC_FILT}, the AMC transistor turns on and clamps the power device gate to VEE. The AMC transistor is not turned off until the next PWM rising edge. This feature is shown in Figure 16. The AMC feature is enabled by default, but can be disabled by SPI command.

If the AMC feature is disabled with the SPI, the AMC transistor is never turned on.

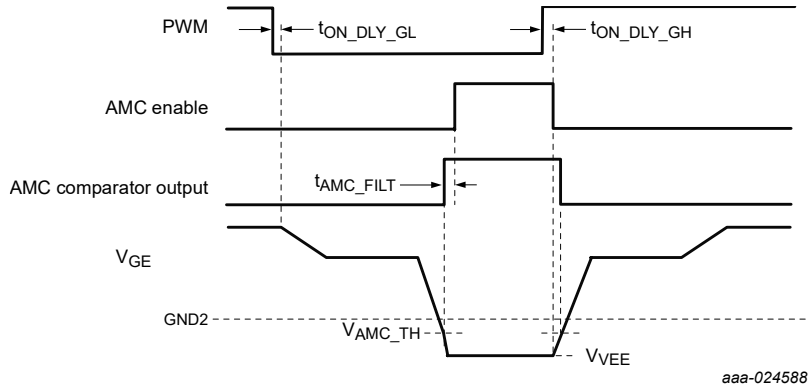

Figure 16. Active Miller clamp operation

All information provided in this document is subject to legal disclaimers.

© 2026 NXP B.V. All rights reserved.

11.4 Current sense protection

11.4.1 Introduction

The GD3160 protects power devices with a current-sense mirror that provides instantaneous readout of the power device's load current. The ISENSE pin senses the current mirror output (converted to a voltage) and differentiates between short-circuit and overcurrent events, and modulates the gate drive accordingly.

After determining an overcurrent or short-circuit event, the GD3160 safely latches the gate off using the two-level turn-off (2LTO) and soft shutdown (SSD) per configuration parameters.

11.4.2 Short-circuit fault management via the ISENSE pin

The features of the short-circuit and overcurrent detection block are:

- Current sense monitoring comparators with programmable thresholds for overcurrent and short-circuit current
- Fast detection and response to short-circuits
- 2LTO to limit the maximum fault current
- Programmable delay time for activating soft shutdown for short-circuits
- Programmable filter time for overcurrent detection

The GD3160's overcurrent and short-circuit detection block diagram is shown in Figure 17:

All information provided in this document is subject to legal disclaimers.

© 2026 NXP B.V. All rights reserved.

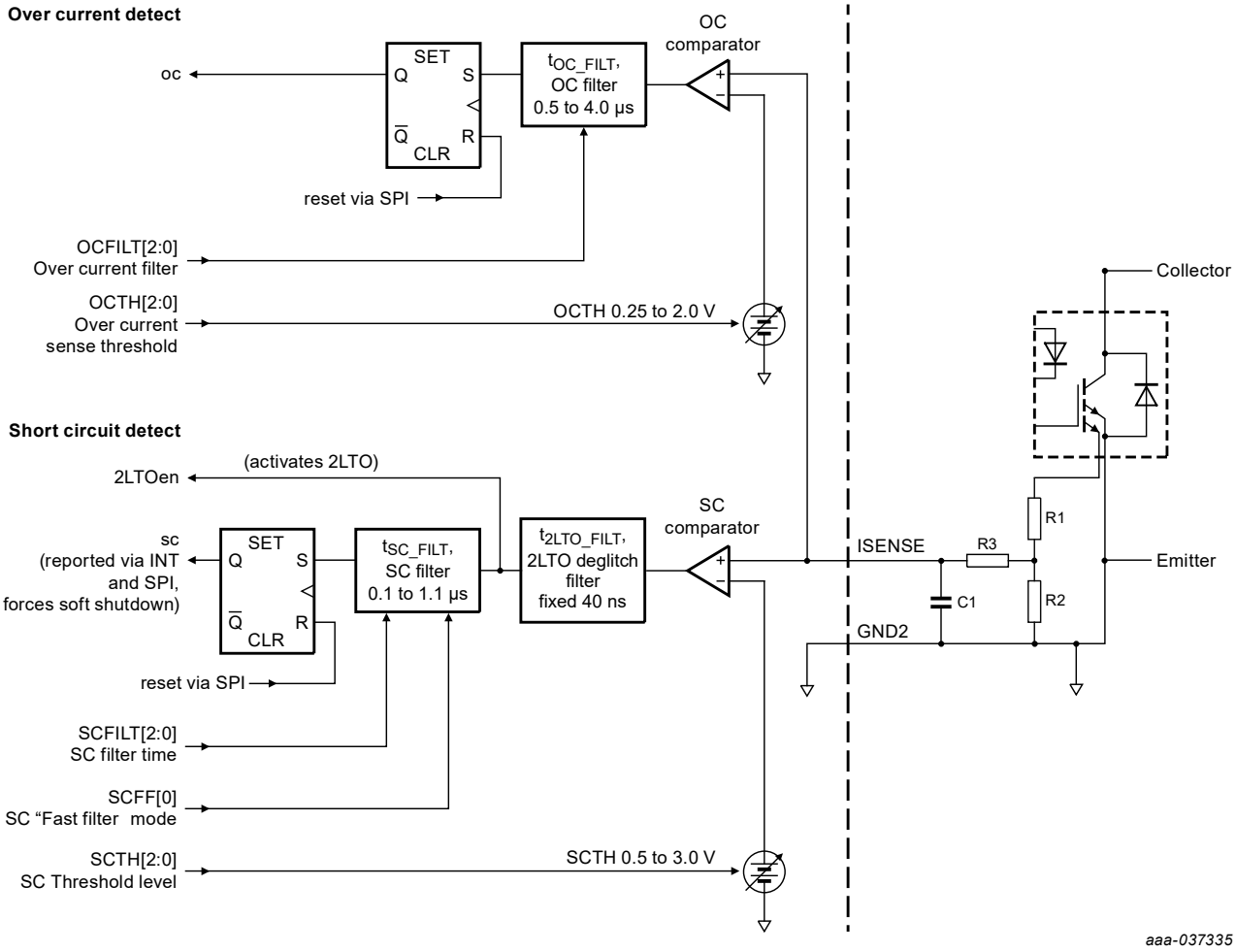

Figure 17. Short-circuit and overcurrent detection block diagram

Implementing short-circuit and overcurrent protection with this circuitry is fairly straightforward. R1, R2, SCTH, and OCTH are selected based on the IGBT's current sense ratio and the desired SC and OC fault thresholds. The SC and OC fault thresholds are set to less than the IGBT's expected $V_{CE(sat)}$.

The circuit responds differently to a short-circuit versus an overcurrent fault. If the short-circuit comparator trips for longer than t_{2LTO_FILT}, the GD3160 initiates a 2LTO by immediately reducing the IGBT's V_{GE} to a lower value. If the comparator remains tripped for a programmable duration (t_{SC_FILT}), then the fault is latched and the IGBT is turned off by the SSD circuitry. If the comparator does not remain tripped, the gate-drive transistor GH turns on once again and returns V_{GE} to its normal on-state voltage. For full short-circuit protection performance, enabling both 2LTO and SSD is recommended to achieve the described operation.

All information provided in this document is subject to legal disclaimers.

© 2026 NXP B.V. All rights reserved.

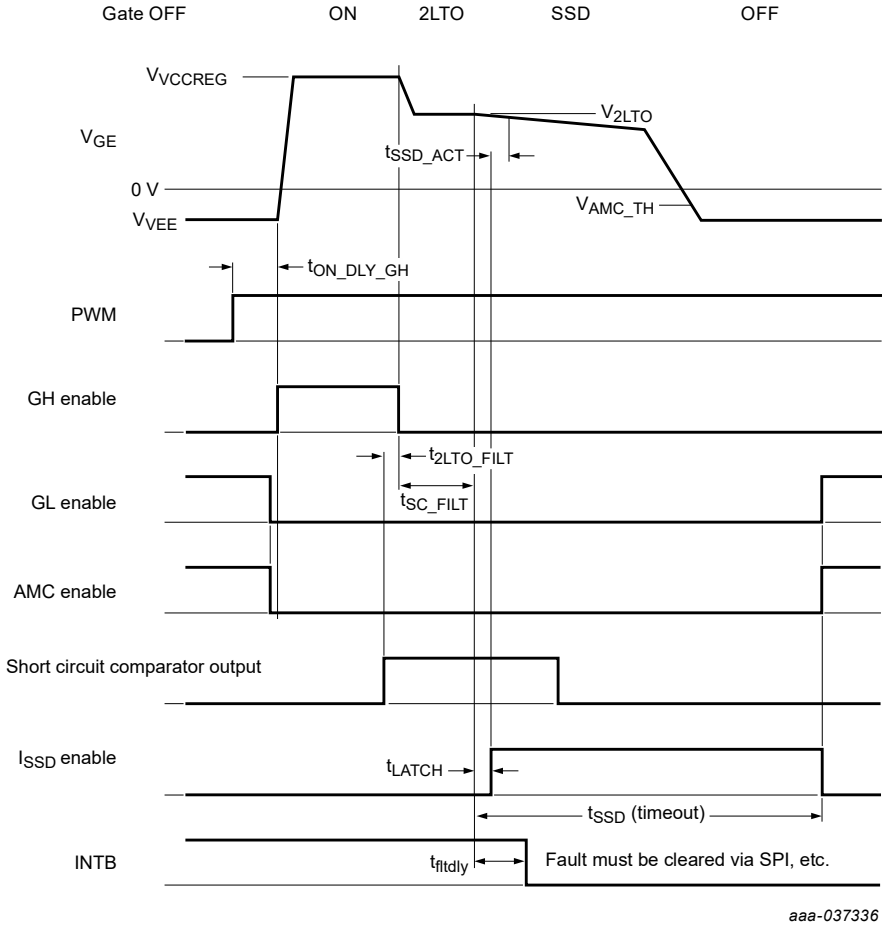

Figure 18. Short-circuit fault timing (2LTO = 1, SSD = 1)

11.4.3 Overcurrent fault management with the ISENSE pin

An overcurrent (OC) at the ISENSE pin is defined by lower threshold than short-circuit, but a longer filter time. When the OC fault is validated (threshold/filter criteria are satisfied per the OCTH and OCFILT settings), the OC fault is latched, reported over the INTA/INTB pins, the gate is turned off by the maximum SSD current value (1.0 A) after the falling edge of PWM. The gate is not latched off, however, and the gate continues to follow PWM control.

After an OC fault, SSD expires at either the programmed timeout or when AMC voltage criteria are met, or if a valid PWM rising edge is received, as shown in Figure 19.

All information provided in this document is subject to legal disclaimers.

© 2026 NXP B.V. All rights reserved.

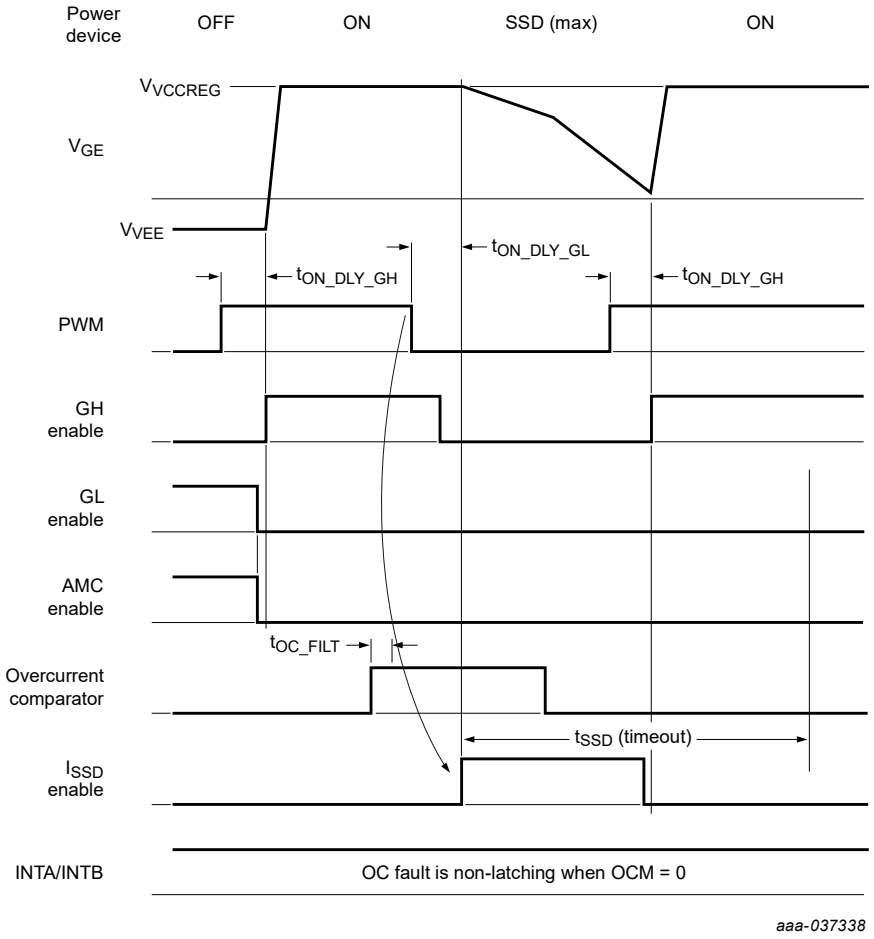

Figure 19. Overcurrent fault timing (OCM = 0, SSD = 1)

To prevent cross conduction while handling an overcurrent fault, the selected dead time on the opposite leg gate driver must be greater than the time it takes the maximum SSD value (roughly 1A) to discharge the gate. This requirement is summarized by Equation 1.

$$DEAD[3:0] > QG / SSDMAX \quad (1)$$

11.5 Desaturation fault protection

11.5.1 Introduction

The GD3160 can also directly monitor the IGBT's/SiC V_{CE}/V_{DS} when the IGBT is turned ON. If an abnormally high V_{CE} is detected, the SSD circuitry quickly (but not abruptly) turns OFF the IGBT and latches and reports the fault.

11.5.2 Features

The features of the V_{CE} desaturation detection block include:

- Desaturation voltage threshold programmable via SPI
- Desaturation blanking time at turn on programmable via SPI

All information provided in this document is subject to legal disclaimers.

© 2026 NXP B.V. All rights reserved.

- An internal 250 µA to 1.0 mA programmable current source, I_{DESAT}, used to monitor a desaturation event
- Fault reporting circuitry, which is used by the Logic block to report the fault and by the gate drive circuitry to turn off the IGBT

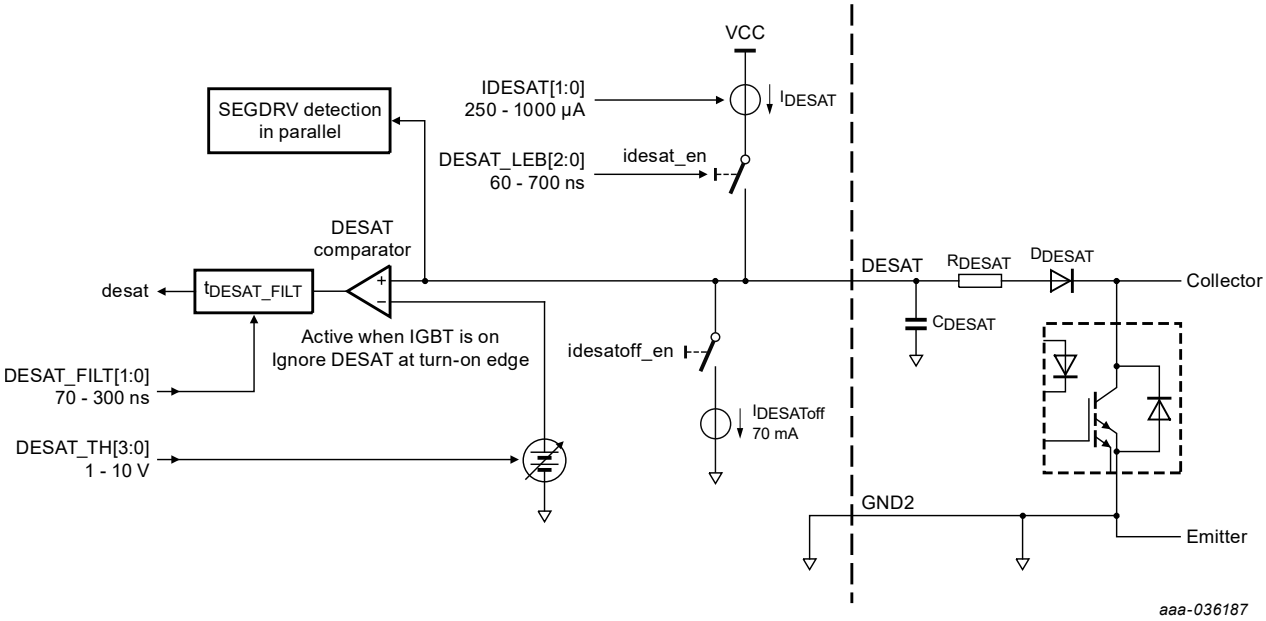

Figure 20. Desaturation fault detection block

11.5.3 Protection and diagnostic features

The GD3160's desaturation detection circuitry monitors the IGBT's V_{CE} and quickly responds if desaturation is detected. Responding within a few microseconds reduces the IGBT heating prior to turn off. Turning off gently is required to minimize the peak V_{CE} transient associated with parasitic circuit and IGBT package inductance.

C_{DESAT}, R_{DESAT} and D_{DESAT} are key external components for this circuit block. D_{DESAT} provides a discharge path to keep V_{DESAT} low when the IGBT is on and not shorted. When the IGBT turns on in a non-faulted condition, it pulls the cathode of D_{DESAT} to its $V_{CE(sat)}$ voltage. The current source I_{DESAT} is able to charge C_{DESAT} only to $V_{CE(sat)}$ + D_{DESAT} + I_{DESAT} * R_{DESAT}. The total is below the desaturation threshold.

Figure 21, Figure 22 and Figure 23 show the circuit's key digital and analog signals when the fault occurs when the IGBT is already ON.

Regarding DESAT fault:

- If 2LTO = 1 when a DESAT fault is detected, the 2LTO circuit is engaged at the expiration of tDESAT_FILT.
- If the fault persists (comparator remains tripped) for the duration of tSC_FILT, then when tSC_FILT expires, ISSD is enabled.
- If the fault disappears (comparator does not remain tripped) during tSC_FILT, then GH is re-enabled and no fault is reported.
- If the fault reappears during the same PWM cycle, the fault shall be immediately latched and reported, and SSD should begin.

The programmable t_{SSD}, soft shutdown time, sets the duration of the soft shutdown interval. During this time, I_{SSD} controls the gate discharge speed. The Soft Shutdown Time should be programmed to be longer than the expected turn off time during a fault. When the t_{SSD} timer expires, the GL transistor (and AMC transistor, if enabled) is turned on to provide a low impedance discharge path for the IGBT's gate. This behavior is illustrated in the next three timing diagrams.

All information provided in this document is subject to legal disclaimers.

© 2026 NXP B.V. All rights reserved.

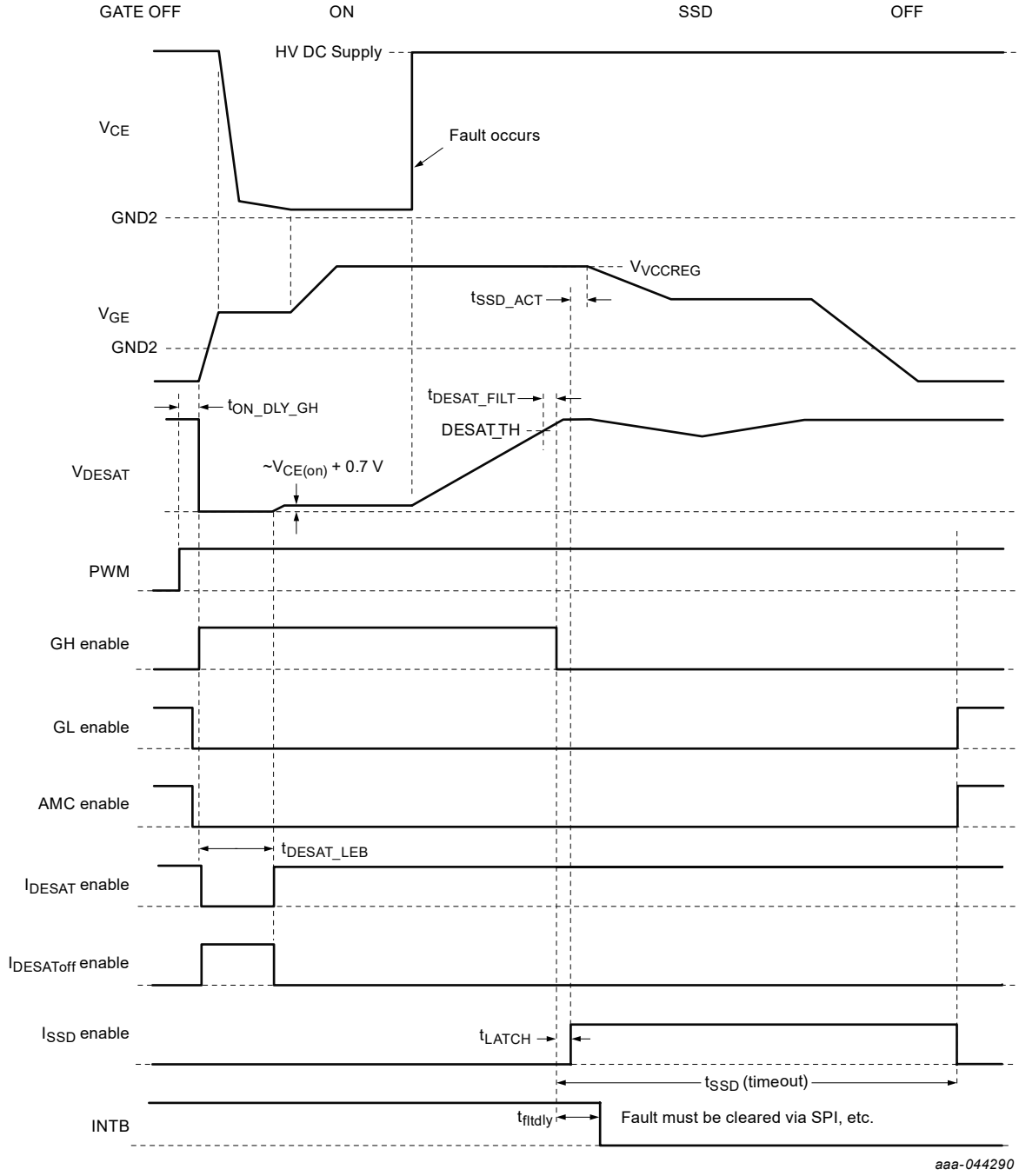

Figure 21. DESAT fault timing (2LTO = 0, SSD = 1), RTMON_CFG = 1

All information provided in this document is subject to legal disclaimers.

© 2026 NXP B.V. All rights reserved.

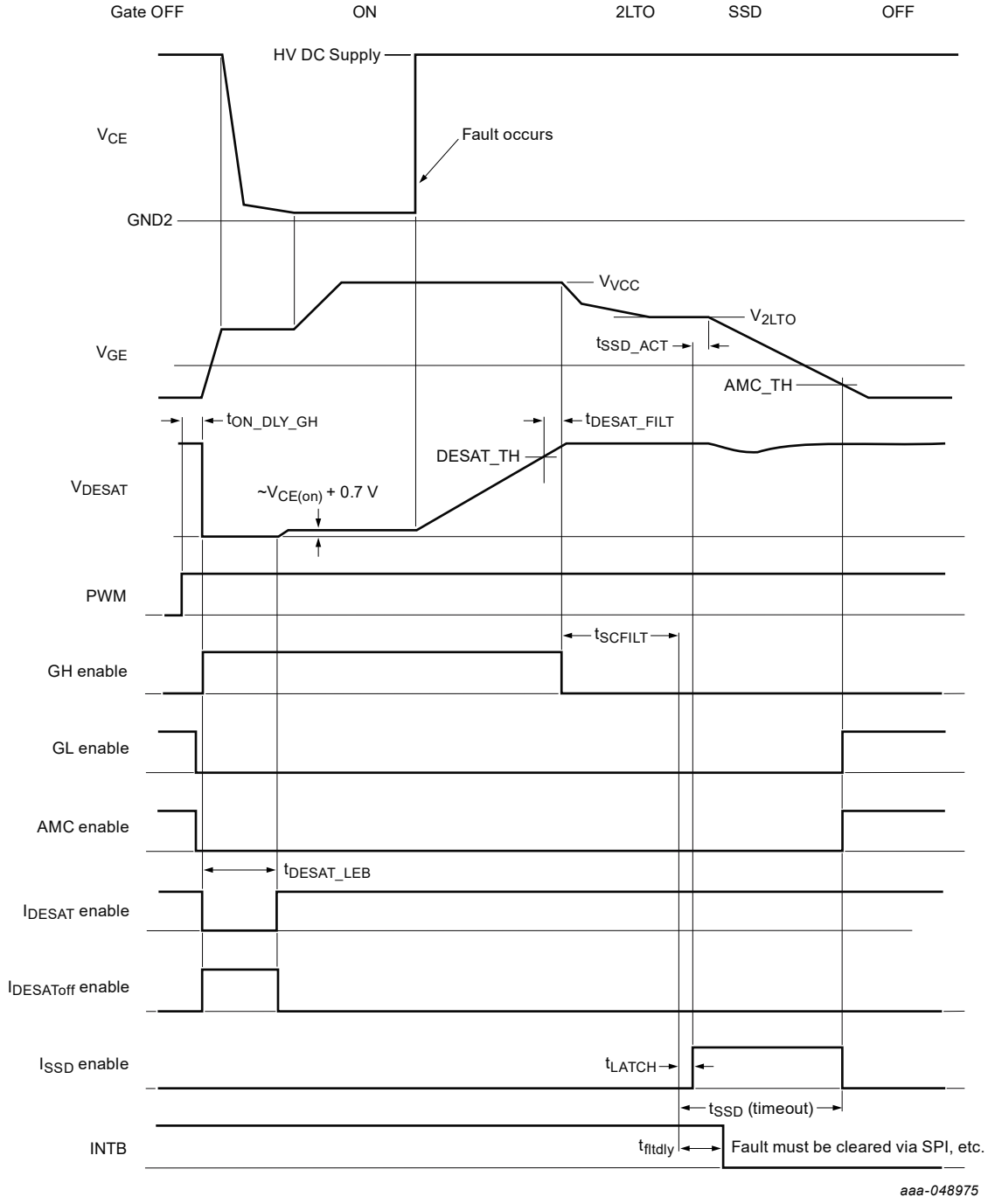

Figure 22. DESAT fault timing (2LTO = 1, SSD = 1), RTMON_CFG = 1

All information provided in this document is subject to legal disclaimers.

© 2026 NXP B.V. All rights reserved.

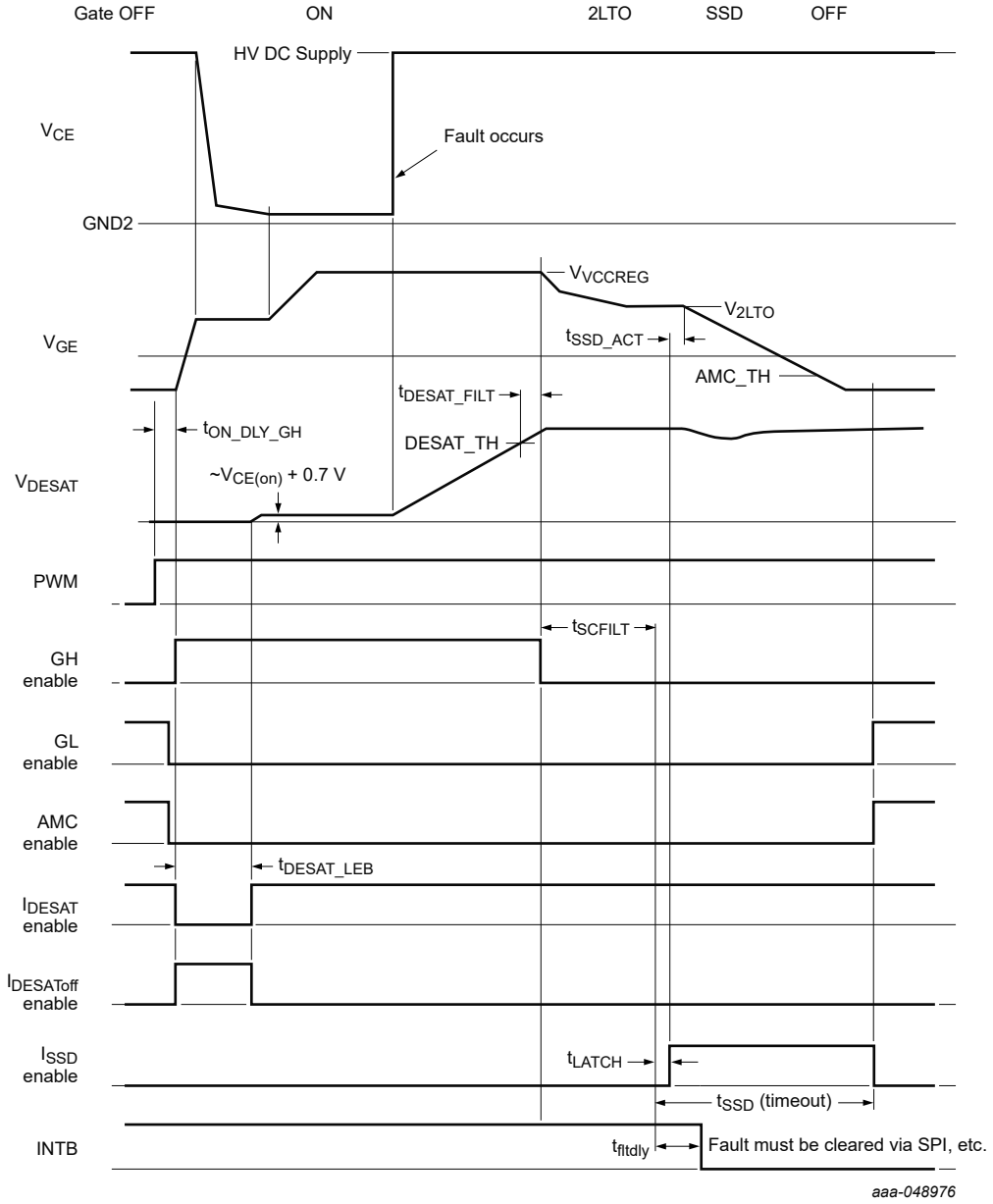

Figure 23. DESAT fault timing (2LTO = 1, SSD = 1), RTMON_CFG = 0

11.6 VCE overvoltage protection

11.6.1 Introduction

The GD3160 contains two provisions that protect the power device from VCE or VDS overvoltage scenarios.

1. Advanced active clamp
2. Segmented drive operation

Advanced active clamp is intended to alter the gate drive in the presence of a high VCE/VDS condition, typically by means of high-voltage Zeners directly connected to the collector or drain. The GD3160 active clamp fault response may be configured as non-latching (default behavior, single-cycle intervention and continue PWMing)

All information provided in this document is subject to legal disclaimers.

© 2026 NXP B.V. All rights reserved.

or as latching behavior (one-time intervention disables PWMing and shuts down the gate) based on application needs.

Segmented drive is a proactive, non-latching, non-faulted function that waveshapes the gate drive when high collector or drain dV/dt is detected by the DESAT pin during turn-off. Gate current during turn-off is modulated between the full turn-off (usually limited by the GL resistor) and a limited soft shutdown current.

Segmented drive is usually recommended when a clean, direct connection to the collector or drain is feasible. Segmented drive offers reduced bill of materials cost and more flexibility and range of detection than the advanced active clamp. Because they modulate the gate differently, only one function (between ACTCLMP and SEGDRV) can be enabled at one time.

11.6.2 V_{CE} advanced active clamp

To enable the active VCE clamp operation, set the bits ACTCLMP = 1 and SEGDRV = 0 in the MODE1 register. The active V_{CE} clamp circuit senses the breakdown of a high-voltage Zener diode connected between the IGBT's collector and its gate. This circuit is intended to activate only at turn-off when the collector voltage is excessive.

Zener breakdown is sensed when the voltage at the CLAMP pin exceeds its threshold, V_{CECL_TH}. When Zener breakdown is detected, the gate drive logic disables the normal turn-off path (GL driver) and engages the SSD driver at its lowest programmable setting. If the active clamp circuitry is enabled and becomes engaged, the INTA/INTB pins respond as configured, and the CLAMP bit in the STATUS1 register is set to Logic 1, readable by SPI. PWMing the IGBT is disabled.

To disable the active VCE clamp function, set the bit ACTCLMP = 0 or SEGDRV = 1.

The V_{CE} clamp detection circuitry has an intervention time, t_{VCECL}. The time t_{VCECL} is the time between the detection of VCLAMP exceeding the V_{CE} clamping threshold (V_{CECL_TH}) and activation of the active clamping circuitry (GL turn off and ISSD turn on).

When the V_{CE} clamp is activated, GL is turned off and the minimum SSD current I_{SSD} is used, regardless of the SSD mode bit settings. The V_{CE} clamp circuitry is engaged for either the minimum release time, t_{VCECR}, or the time the CLAMP pin exceeds the threshold (V_{CECL_TH}) with hysteresis considered ($V_{CECL_TH_HYS}$), whichever is longer. If the TIME_2 = 1 (reducing fault handling times), then the minimum release time, t_{VCECR}, is cut in half (typ. 100 ns). The maximum V_{CE} clamp intervention time duration is limited to t_{VCECR_MAX}.

After the clamp intervention time has ended, GL is used to turn off the gate, and AMC is activated when threshold criteria are met.

The CLAMPM mask bit (in the MSK1 register) determines how the clamp activation is reported, and whether the fault is latched or not. When CLAMPM = 1, the V_{CE} clamp operation is treated as a latched fault (the fault bit CLAMP in the STATUS1 register is latched at Logic 1 following the clamp activation), INTA/INTB are pulled low, and PWM is disabled following the fault. When CLAMPM = 0, the V_{CE} clamp operation is treated as a non-latching, non-fault case: there is no action on INTA/INTB, and the PWM remains enabled following the clamp activation. The CLAMP bit in STATUS is logic high while the active clamp is activated.

All information provided in this document is subject to legal disclaimers.

© 2026 NXP B.V. All rights reserved.

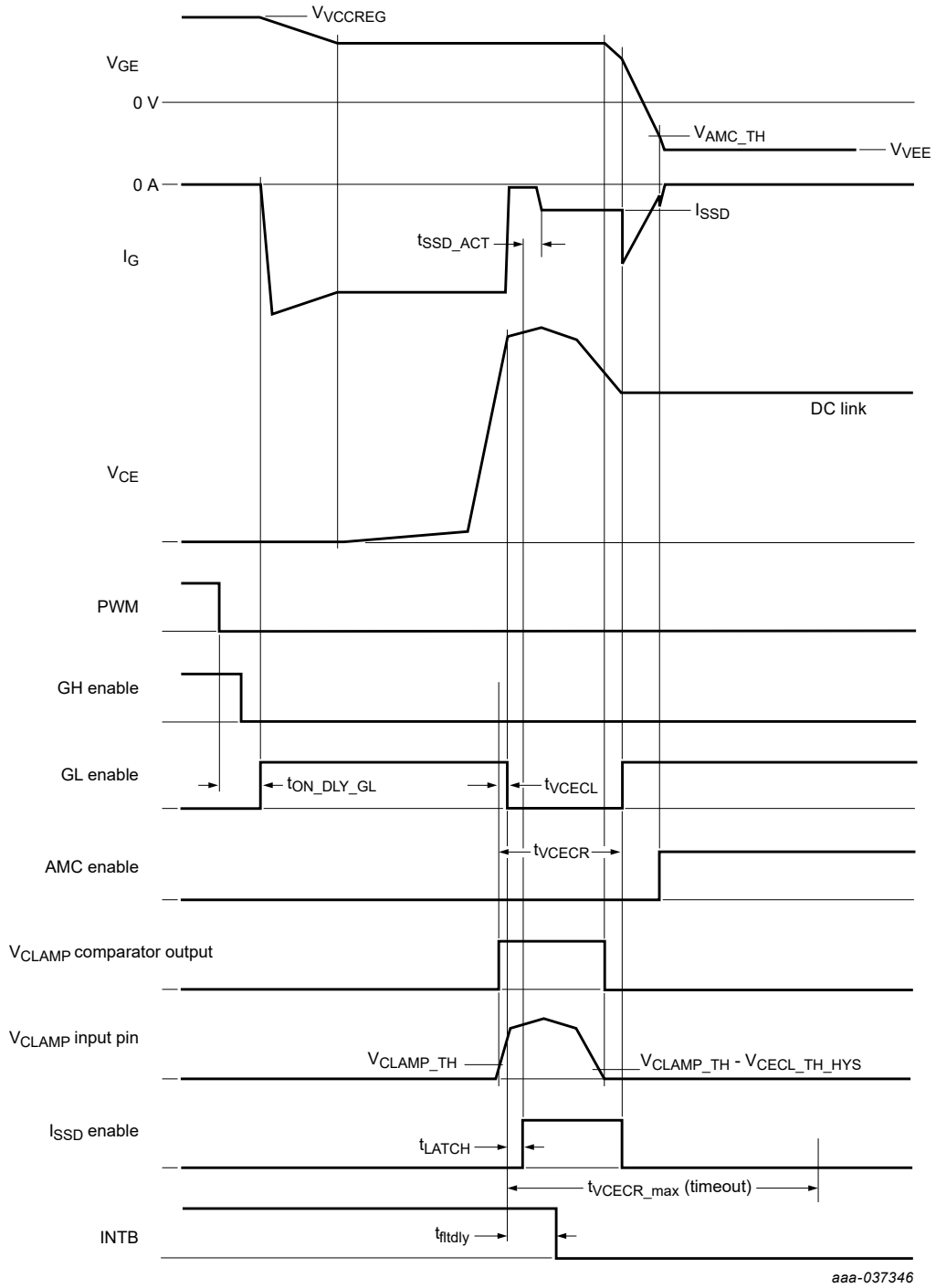

Figure 24. V_{CE} active clamping timing

All information provided in this document is subject to legal disclaimers.

© 2026 NXP B.V. All rights reserved.

11.6.3 Segmented drive operation

Segmented drive refers to the GD3160's capability to waveshape the turn-off current and modulate the gate impedance during turn-off, for the purposes of mitigating potentially high V_{CE} overshoot. Segmented drive is exclusively a non-fault, non-latching mode of operation during turn-off, whereas VCE active clamp (see Section 11.6.2) is a fault protection responding to high V_{CE} at any time.

To enable segmented drive, set bits SEGDRV = 1, ACTCLMP = 0 and TIME_2 to select t_{ssd_seg} duration (either 640 ns typ or 340 ns typ) in the MODE1 register. Active clamp and segmented drive can potentially overlap, and they will reduce each other's effectiveness if both are enabled. Segmented drive is only activated during the turn-off sequence; there is no effect while the gate is On.

Two following figures show the segmented drive circuitry and the associated waveforms. When the IGBT is commanded off in Segmented Drive mode, pulldown transistor GL turns on and the IGBT's gate quickly discharges to its plateau voltage. When V_{CE} begins to rise, it does so relatively slowly because the IGBT's input capacitance is quite high at this time. A comparator monitors V_{CE} as it rises. When V_{CE} exceeds the trip threshold just before V_{CE} increases abruptly, GL is turned off, SSD current typically starts after 15 ns (t_{SSD_ACT}) and I_{SSD} turns on to discharge the gate for a maximum of t_{SSD_SEG} defined by TIME_2 in the MODE1 register or until VAMC_TH is reached. Segmented drive uses a user-programmable threshold ($SEGDRV_{TH}$) determined by the SEGDRV_TH bits in CONFIG4. A programmable delay, $t_{SEGDRVDLY}$, can be inserted to delay the change to the SSD current.

The external capacitor C_{DESAT_TH} must not slow the detection of the V_{CE} magnitude needed to trigger the segmented drive. To overcome the presence of C_{DESAT_TH}, the GD3160 uses a strong pullup current source, (I_{VCESEN}), so that the voltage at DESAT follows V_{CE} during IGBT turn-off. Additional details of the desaturation detection are provided in Section 9.5.

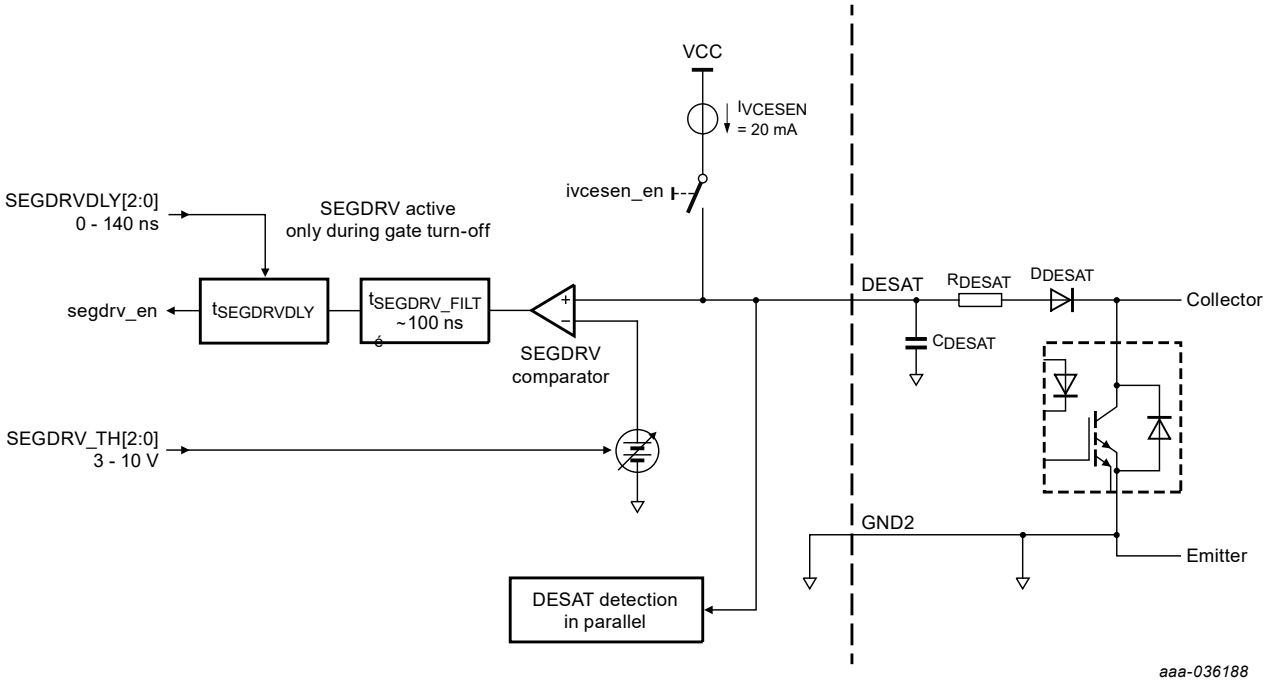

Figure 25. Segmented drive detection circuitry

All information provided in this document is subject to legal disclaimers.

© 2026 NXP B.V. All rights reserved.

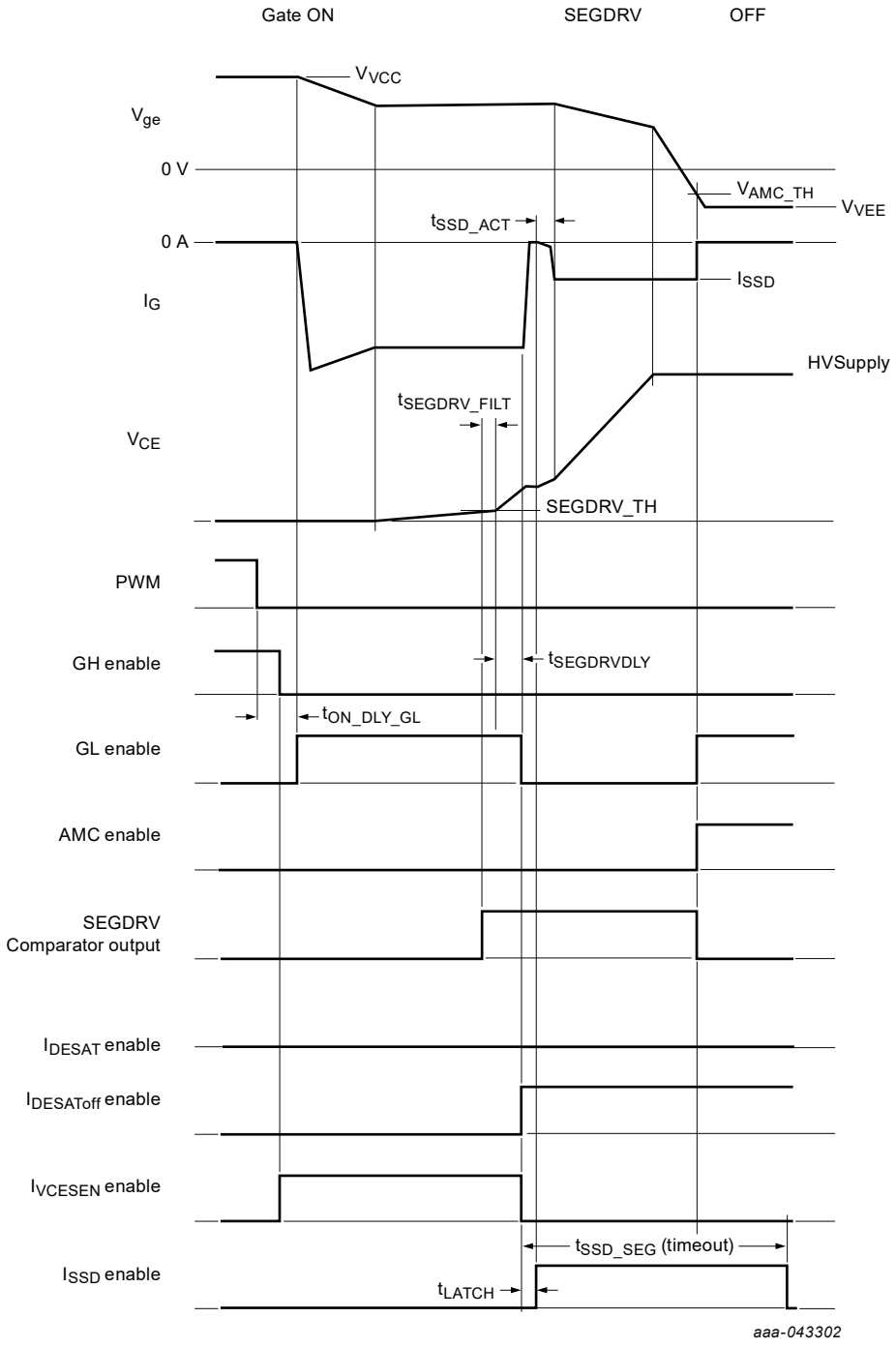

Figure 26. Segmented drive timing

All information provided in this document is subject to legal disclaimers.

© 2026 NXP B.V. All rights reserved.

11.7 Fault status and analog reporting

11.7.1 Introduction

The GD3160 reports the status of faults and real-time power device conditions (such as VGE, VCE, power device temperature) via the INTA and INTB interrupt pins, as well as the analog reporting AOUT pin.

11.7.2 INTB pin

The INTB rapidly reports faults and status changes. Once any fault is filtered and validated by its detection circuitry, the presence of a fault is reported at the INTB pin within 1.6 µs. Fault type and warning data are received by the SPI registers within 500 ns of validating the fault or warning.

All faults that can trigger the INTB are independently selected in SPI registers MSK1 and MSK2. The INTB's open drain active pulldown is released when the fault is cleared. Clearing a fault requires actively clearing it with an SPI write command to the status register address. Each fault bit is cleared only if the fault is no longer present. Unlike the INTA pin, the INTB pin is only configurable for fault reporting. Most faults have configurable report masks (the RMSK1 and RMSK2 registers) to route faults to either INTA or INTB, but some faults are restricted to only report on INTB, including:

- SPIERR
- CONFCRCERR
- RTMON_FLT
- WDOG_FLT
- COMERR
- BIST_FAIL
- VDD_UVOV

Faults that have no mask, but can be allocated to either INTA or INTB are given below:

- OTSD_IC
- DESAT
- SC
- VREF_UV

All information provided in this document is subject to legal disclaimers.

© 2026 NXP B.V. All rights reserved.

11.7.3 AOUT pin

During Normal operating mode the duty cycle at the AOUT pin is a function of the ADC value according to Figure 27. The base frequency is 3.9 kHz ±3 %.

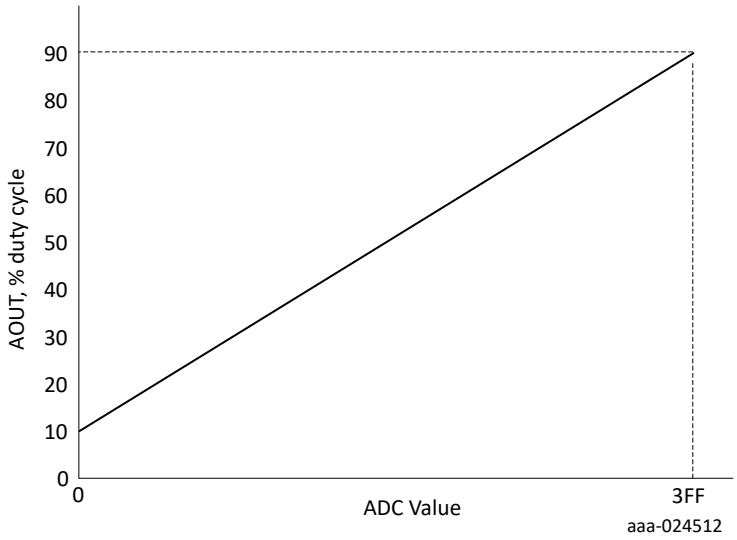

Figure 27. AOUT % duty cycle vs. ADC value

When the GD3160 is in the Wait mode, the duty cycle at the AOUT pin is 5.0 %. When the GD3160 is in BIST mode, the duty cycle is 0 %. When the GD3160 completes a BIST routine, the AOUT pin returns to normal operation.

The AOUT pin can be configured to simultaneously transmit two signals (when the bit AOUT = '1' in the MODE1 register). If this feature is enabled, the TSENSEA voltage is encoded by duty cycle at 3.9 kHz, and a second interleaved signal is encoded by duty cycle at a 5.6 kHz frequency (±3 %). The second signal is chosen via the SPI according to the AOUT_SEL bits (CONFIGAOUT register) and delivered in a repeating, interleaved pattern determined by the AOUTCONF bits (CONFIG5 register).

Figure 28 describes the AOUT pin signal with two interleaved duty cycles (AOUT = '1' in MODE1 register).

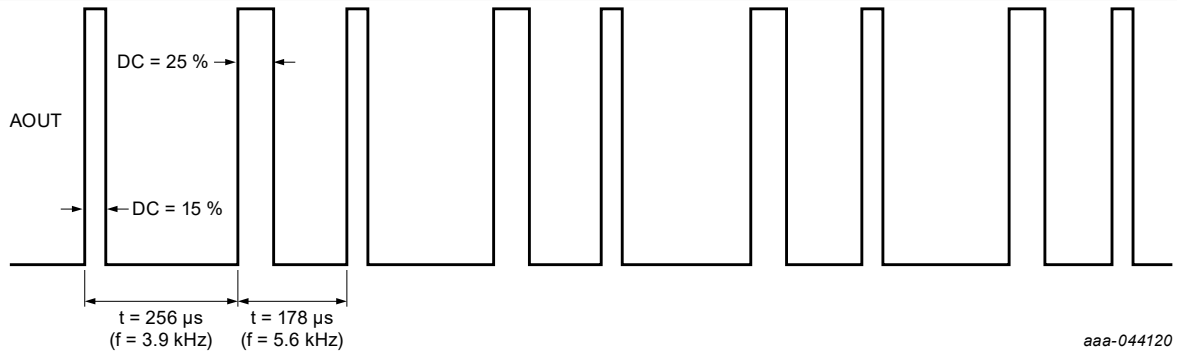

Figure 28. AOUT signal with interleaved pattern

All information provided in this document is subject to legal disclaimers.

© 2026 NXP B.V. All rights reserved.

11.8 VGE real-time monitoring (RTMON)

If RTMON_FLTM = '1' and RTMON_CFG = '0', after a programmable delay time, $t_{RTMONDLY}$, the low-voltage domain compares the PWM input to the actual state of the gate. For this purpose, as shown in Figure 29, it is required that $t_{RTMONDLY} > t_{ON_DLY_GH} + t_{RTRPT_DLY}$. If VGE fails to respond to the PWM command, the fault is latched and reported via the SPI and at the INTA/INTB pin and the IGBT's gate is commanded off.

Figure 29 shows how the low-voltage domain monitors the state of the power device gate.

The ON/OFF state of the gate is determined by thresholds referred to the VCCREG (positive gate supply) and VEE (negative gate supply) to support a variable gate supply range.

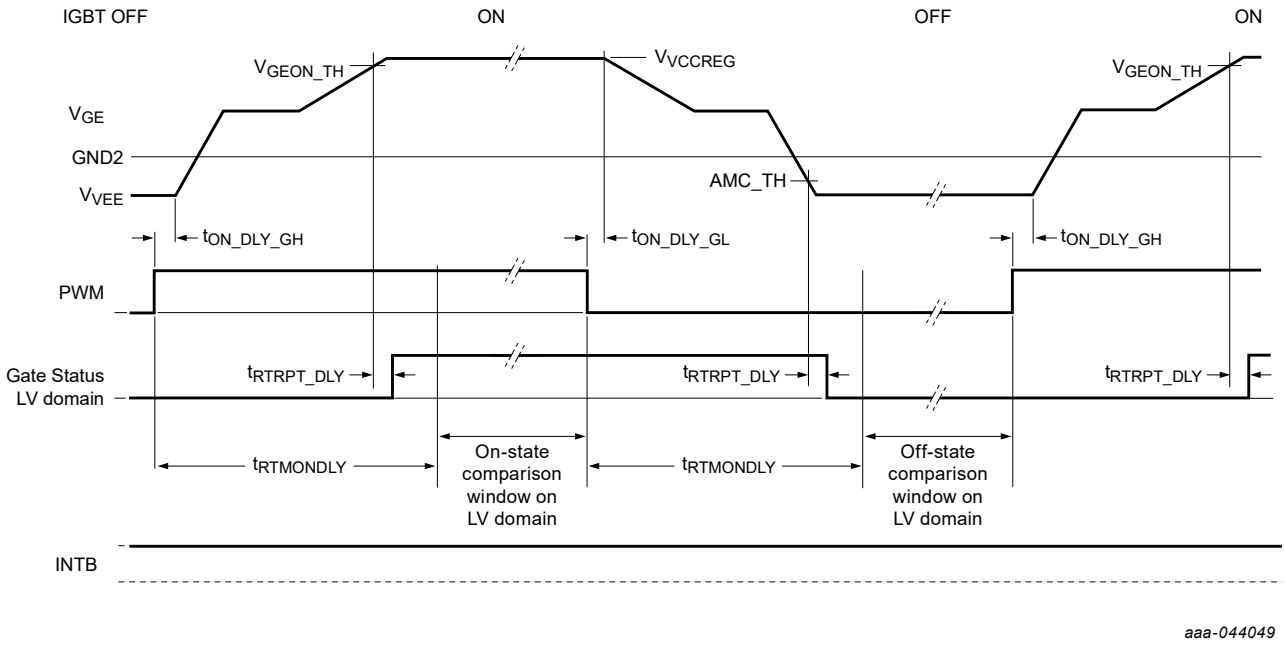

Figure 29. Low voltage domain monitoring of IGBT's V_{GE}, RTMON_CFG = 0 (Vge state monitored at the AMC pin)

All information provided in this document is subject to legal disclaimers.

© 2026 NXP B.V. All rights reserved.

11.9 INTA fault reporting and real-time reporting

11.9.1 INTA overview

The INTA is an interrupt-style pin that can be configured for one of three different fault/status report functions, programmable by SPI. The INTA allocation is determined by the RTRPT and RTMON_CFG bits in the MODE2 register.

1. High severity fault/status report
2. Real-time collector voltage monitor/report
3. Real-time gate state monitor/report

Table 24. INTA configuration options

RTRPT mode bit	RTMON_CFG mode bit	INTA operation
0	X	Real-time reporting disabled INTA configured as a fault report • Configure report mask with RMSK1 and RMSK2 registers
1	0	Real-time report enabled INTA reports VGE status
1	1	Real-time report enabled INTA reports VCE status

11.9.2 INTA fault reporting

When INTA is configured as a fault reporter, the INTA pin is configured as an open-drain output with a 50 kΩ passive pullup. Once a fault has been detected and validated, the fault is indicated to the INTA pin within 1.6 µs. Fault type and warning data are received by the SPI registers within 500 ns of validating the fault or warning condition.

In this configuration, INTA will be pulled low within 1.6 µs when a fault – which is allocated for INTA, and not masked as a whole – is validated. The fault mask for the entire GD3160 device is set by the MSK1 and MSK2 registers. The allocation (for unmasked faults) between INTA and INTB pins is determined by the RMSK1 and RMSK2 registers.

11.9.3 INTA real-time VCE reporting

When INTA is configured as a real-time VCE reporter, the INTA pin is transistor-driven to VDD and GND1, and reports the state of the collector/drain voltage as seen at the DESAT pin. The DESAT pin therefore needs to be connected to the power device collector or drain pin.

When V_{CE} or V_{DS} voltage is above the DESAT threshold (set by DESAT_TH bits), the INTA pin is pulled to logic low after a delay of t_{RTRPT_DLY}, indicating the power device is off. When V_{CE} or V_{DS} voltage is below the DESAT threshold, the INTA pin is actively pulled logic high, indicating the power device is on.

An example timing diagram (with segmented drive disabled) showing V_{CE}/V_{DS} status reporting is given in Figure 30.

All information provided in this document is subject to legal disclaimers.

© 2026 NXP B.V. All rights reserved.

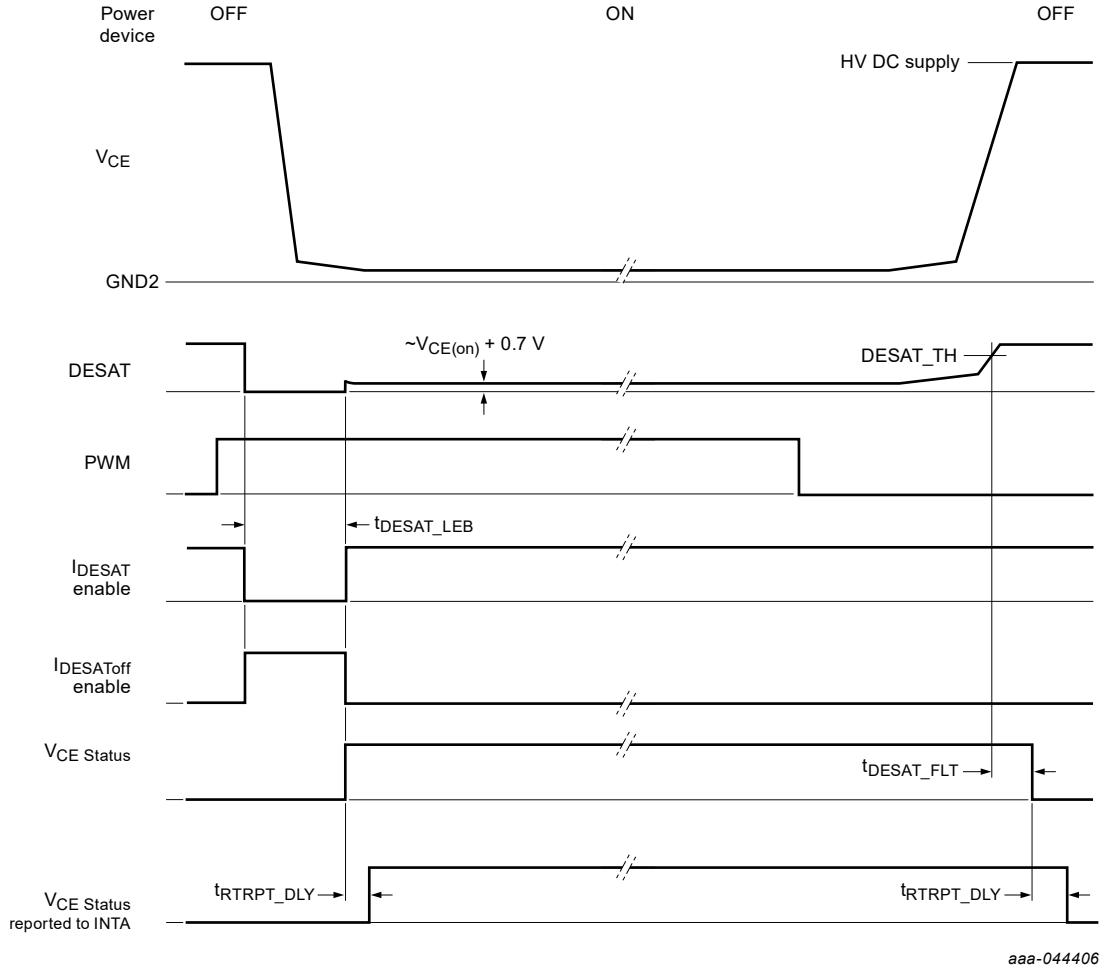

Figure 30. INTA as a real-time VCE reporter

When the GD3160 is configured for real-time reporting (RTRPT = 1 and RTMON_CFG = 1), the I_{DESAT} current source is always on, except during the DESAT leading edge blanking time, and when segmented drive is activated during turn-off. INTA reports a high V_{CE}/V_{DS} after segmented drive has completed during the turn-off.

The desaturation fault detection is active and monitored in parallel at the same time as the real-time. There is no interference or exclusivity between desaturation fault detection and the real-time V_{CE}/V_{DS} report.

11.9.4 INTA real-time VGE reporting

When INTA is configured as a real-time VGE reporter, the INTA pin is transistor-driven to VDD and GND1, and reports gate high/low status, as seen at the AMC pin. The AMC will therefore need to be directly connected to the power device gate pin, even if the active Miller clamp function is disabled.

An example of real-time gate voltage reporting is shown in Figure 31.

All information provided in this document is subject to legal disclaimers.

© 2026 NXP B.V. All rights reserved.

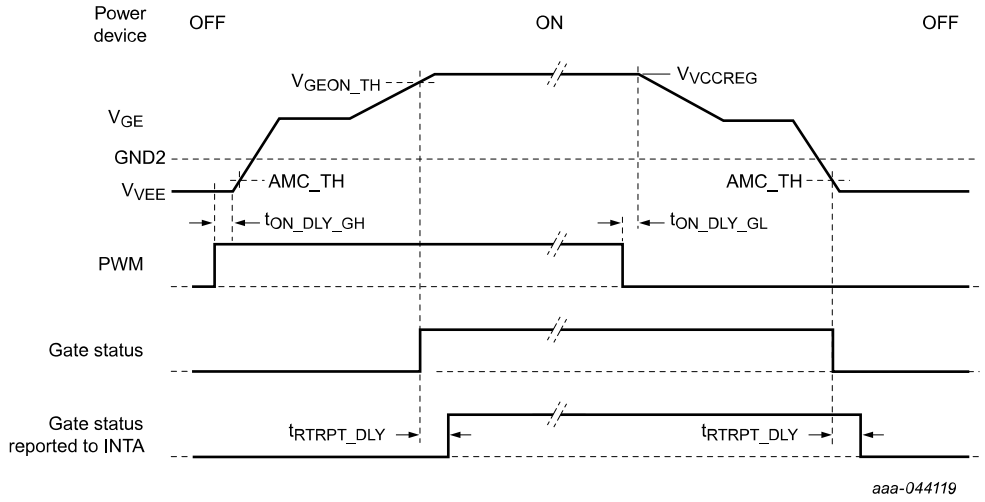

Figure 31. INTA as a real-time VGE reporter

When the gate voltage has surpassed V_{GEON_TH}, the gate monitor circuitry interprets this as ON status, and INTA is actively pulled to logic high. When the gate falls below VAMC_TH, the gate monitor circuitry interprets an OFF status and INTA is pulled to logic low. The delay between gate voltage passing thresholds is a maximum 240 ns, represented by t_{RTRPT_DLY} in Figure 31.

11.10 Power device overtemperature detection circuitry

11.10.1 Introduction

Directly monitoring the power device's temperature provides four advantages.

The first benefit is that the IGBT (and the system) can be protected against catastrophic IGBT failure from excessive temperature or a violation of its safe operating area at elevated temperature.

The second benefit is that the inverter need not be unnecessarily derated at high power because the IGBT's temperature is not known. Monitoring the IGBT's die temperature allows the controller to continue operating at conditions that might otherwise risk failure.

The third benefit is that the IGBT's temperature can be monitored for long term wear out mechanisms.

The fourth benefit is that the OTW signal allows the system to respond to unexpectedly high temperature before an OTSD fault triggers shutdown autonomously, which may not be desired.

11.10.2 Features

The features of the overtemperature detection circuitry are:

- Accurate current source available to drive temperature sense diodes, or disabled for thermistor-based measurements
- A 10-bit ADC to monitor the voltage across the temperature sense element
- On-the-fly programmable overtemperature and overtemperature warning thresholds
- 2.0 ms filters for overtemperature and OT warning
- 10-bit temperature value provided in the SPI temperature register and available as a duty cycle encoded signal at the AOUT pin
- Configurable gain and offset parameters to increase dynamic range of temperature measurements

All information provided in this document is subject to legal disclaimers.

© 2026 NXP B.V. All rights reserved.

Setting the TISNS_EN bit to '1' in the MODE2 register to Logic 1 enables the sense current, I_{OT}. Setting the TISNS_EN bit to '0' disables the current source, to interface with resistive temperature-coefficient devices, such as NTCs, and so on.

OT and OTW thresholds are programmed at power up or on-the-fly and reside in the SPI registers OT_TH and OTW_TH. The intent is for OT_{TH} and OTW_{TH} to be calibrated at the system-level, considering on the characteristics of the temperature sense device. If OTW_{TH} is set higher value than OT_{TH}, the GD3160 detects negative temperature coefficient behavior, and enforces an overtemperature fault at measurements below OT_{TH}. If OTW_{TH} is set below OT_{TH}, the GD3160 interprets the network as a positive temperature coefficient, and enforces the overtempreature (OT) fault at measurements above the OT_{TH}.

An OTW fault is latched in the logic, reported via the SPI and the INTB pin but it does not turn off the IGBT's gate. An OTSD fault is latched in the logic, reported via the SPI and the INTB pin and turns off the IGBT's gate with its normal turn-off circuitry (no 2LTO or SSD). In case OTW fault is triggered and remains, RTMON_FLT reporting is automatically masked, (not reported on INTB or SPI and no action on the gate).

When no SPI message has been received for ~200 µs, the temperature sense ADC value is updated automatically as part of the LV/HV domain's watchdog refresh activity.

Section 11.12 explains how the TSENSEA voltage can be monitored at the AOUT pin and the SPI.

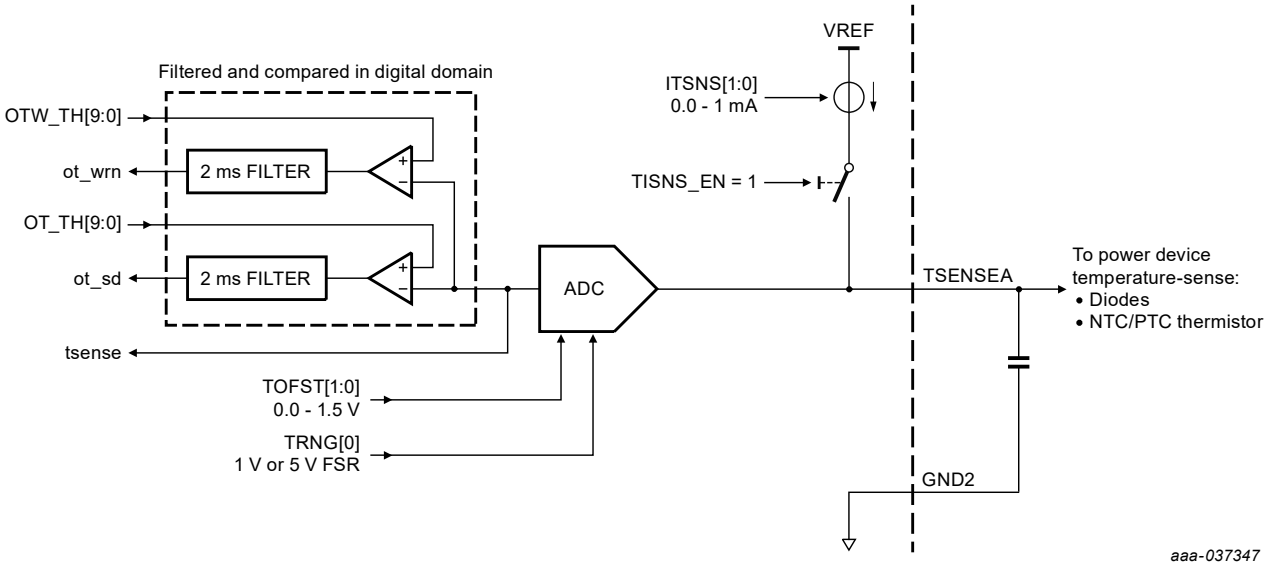

Figure 32. Overtemperature monitoring circuitry

11.11 Overtemperature detection of the GD3160

11.11.1 Introduction

The GD3160 monitors the temperature of its gate drive transistors and primary voltage regulators. The temperature sense circuitry protects the GD3160 and reports the temperature as a converted digital value.

The post-converted die temperature result is read directly from the Request ADC Response register (ADCVAL[9:0]).

All information provided in this document is subject to legal disclaimers.

© 2026 NXP B.V. All rights reserved.

11.11.2 Features

One of the three temperature sense circuits monitors the VDD regulator temperature on the low-voltage domain. A circuit on the high-voltage domain monitors the temperature near the GH drive transistor, the VCCREG pass transistor, and the VREF regulator. A second circuit on the high-voltage domain monitors the temperature near the GL and AMC transistors.

Any of the three temperature sensors can trigger an overtemperature shutdown of the IC. When the GD3160's temperature reaches its overtemperature shutdown threshold, T_{OTSDth}, the GD3160 reports the condition at the INTB pin and in the OTSD_IC bit in the STATUS1 register.

Regardless of the fault's source, an overtemperature signal disables PWMing by turning off the GH transistor and turning on the GL and AMC transistors (if the AMC feature is enabled). If the condition is detected on the high-voltage domain, the GD3160 turns off GH, VCCREG and VREF. If the VDD regulator is reporting the condition, the VDD regulator remains on. This leaves open the possibility that the MCU can manage the fault.

All overtemperature shutdown circuits have a low pass filter, $t_{OTICfilt}$; its nominal value is 20 µs. The specification is provided in Section 9.3.

The GH temperature can be read by sending a REQADC SPI command with the AMUX_SEL[3:0] bits set to request the GH temperature measurement.

Figure 33 shows the block diagram of the temperature sensing circuitry on the GD3160.

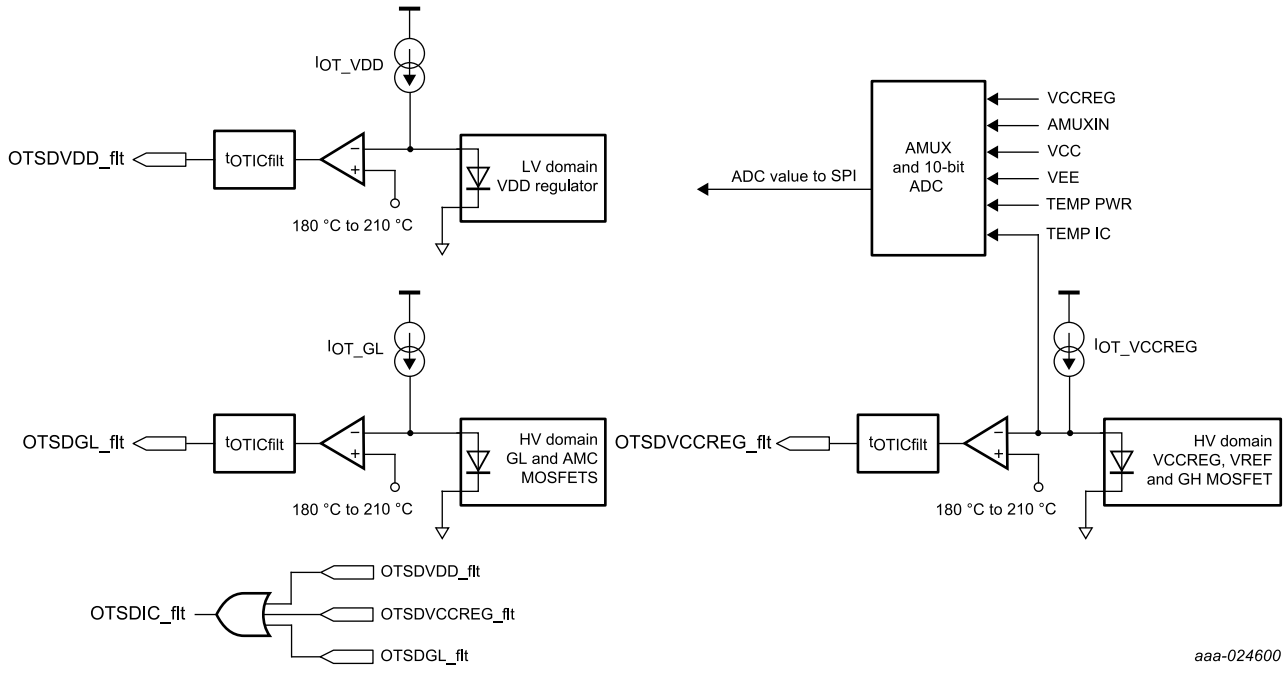

Figure 33. GD3160 overtemperature block diagram

The internal die temperature at GH can be determined by Equation 2.

$$T_{GH}(\text{degC}) = 372 - (\text{ADC}_{DEC} / 1.982) \quad (2)$$

All information provided in this document is subject to legal disclaimers.

© 2026 NXP B.V. All rights reserved.

11.12 AMUX and analog-to-digital converter

11.12.1 Introduction

The GD3160 has an analog multiplex circuit (AMUX) that provides signals to a 10-bit analog-to-digital converter (ADC). The circuit's primary purpose is to monitor the IGBT's temperature by sensing the voltage at the TSENSEA pin.

The AMUX and ADC allow reading and conversion of the voltages at the TSENSEA, AMUXIN, VCC, VCCREG, and VEE pins, as well as the output of the internal GH temperature sensor. The converted data can be monitored via the SPI or the AOUT pin with the appropriate SPI commands and register settings.

11.12.2 AMUX and ADC features

A block diagram of the AMUX-ADC circuitry is shown in Figure 34. The ADC's full-scale voltage range depends on the signal it is sensing. For TSENSEA, AMUXIN and GH temperature the full-scale voltage is VREF, or nominally 5.0 V.

For VCC and VCCREG, which are attenuated 30x, the full-scale voltage is 1.0 V. GND2 is the ground reference for all ADC conversions. For reading VEE, the voltage is attenuated by 15x. See Equation 3.

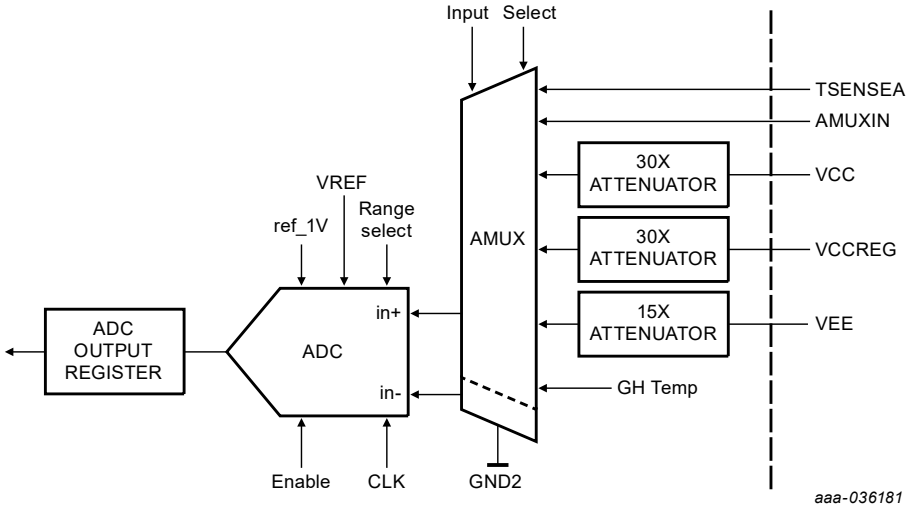

Figure 34. AMUX and ADC block diagram

The AMUX circuit provides the signals for conversion based on SPI register settings. The ADC output register is refreshed as part of the normal watchdog operation or when commanded via SPI. When there is no SPI activity for 200 µs, the low-voltage domain autonomously sends a REQADC command to the high-voltage domain, requesting the TSENSEA voltage (or periodically, the AOUT_SEL quantity, if AOUT = 1 in the MODE1 register). The high voltage responds with the converted result of the requested quantity. This routinely supplies the low-voltage domain with data available to construct the AOUT response.

If a signal other than TSENSEA is desired, then the MCU can send a SPI message to read that signal at any time. A REQADC command returns the value of the signal specified by the AMUX_SEL [2:0] bits in the REQADC command. This SPI communication also resets the watchdog timer.

The AOUT pin also reports the signal selected by the AMUX block. Normally and by default, the AOUT duty cycle provides the encoded TSENSEA voltage. However, setting the AOUT bit in the MODE1 register to Logic 1 instructs the high-voltage domain to report one of the other signals, as well as IGBT temperature. When two signals are requested, they appear at AOUT alternatively at 3.9 kHz and 5.6 kHz periods. In this case, AOUT encodes TSENSEA followed by the signal specified by the AOUT_SEL [2:0] bits in the CONFIGAOUT register.

All information provided in this document is subject to legal disclaimers.

© 2026 NXP B.V. All rights reserved.

The GD3160 monitors the temperatures of the VDD regulator on the low-voltage domain, the GL transistor on the high-voltage domain, and the GH transistor on the high-voltage domain. The GH sensing element is near the VCCREG regulator, so it is protected, too. The VDD and GL circuits are used for overtemperature shutdown only. Their temperatures cannot be read via the SPI or the AOUT pin. Temperature values are available only for the GH temperature sensor on the high-voltage domain.

The output conversion values for AMUXIN and TSENSE are 000h to 3FFh (000h for 0 V; 3FF for VREF).

For VCC and VCCREG, the conversion values are 000h to 3FFh (000h for 0 V; 3FF for 30 V).

For VEE measurement through the AMUX, the conversion values are 000h (when VEE = –15 V) and 3FFh (when VEE = 0 V). The voltage at the VEE pin (referred to as GND2, negative in most cases) is converted by the ADC in Equation 3:

$$\mathrm{ADC_{VEE}} = \left(1 + \frac{\mathrm{VEE}}{15\ \mathrm{V}}\right) * (1023\ \mathrm{LSB}) \tag{3}$$

To perform a read of the ADC, set the bits AMUX_SEL [2:0] according to the signal to be read. Next perform a read of the REQADC register. The result is then returned in the REQADC register. Note that the REQADC register is read only.

11.13 24-bit serial peripheral interface

11.13.1 Introduction

The serial peripheral interface (SPI) has the following features:

- Full duplex, four-wire synchronous communication
- Responder mode operation only
- Fixed SCLK polarity and phase requirements
- Fixed 16-bit command word with 8-bit cyclic redundancy check (CRC)
- SCLK operation up to 10 MHz
- Compatible with daisy-chain operation

SPI communication follows Figure 35:

All information provided in this document is subject to legal disclaimers.

© 2026 NXP B.V. All rights reserved.

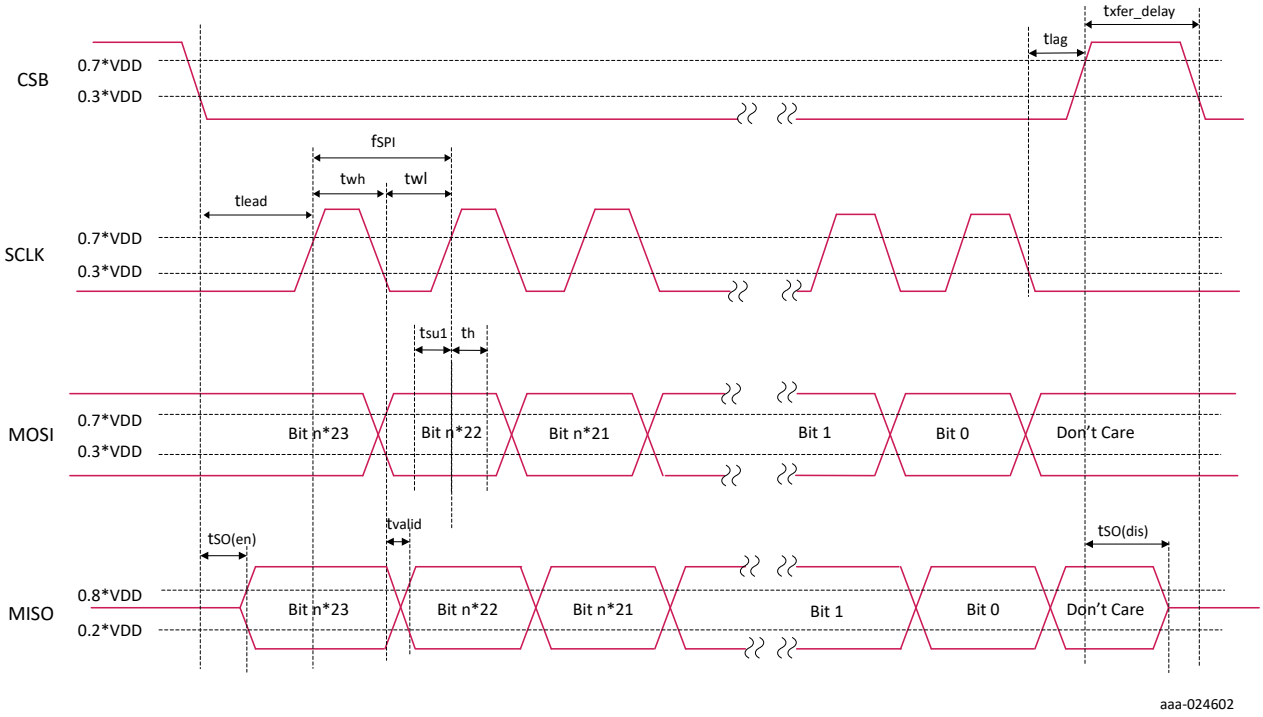

Figure 35. SPI timing

SPI protocol:

- SPI MOSI data is read on SCLK rising edge.
- MISO data is changed on SCLK falling edge.
- SPI communication is MSB first.
- SPI command is composed of a multiple of 24 SCLK cycles.
- The number of clock cycles occurring on the pin SCLK while the CSB pin is asserted low must be a multiple of 24.
- The serial output data is available on the rising edge of SCLK and transitions on the falling edge of SCLK.
- The content of MISO reported by the GD3160 depends on the previously selected register address.
- On first SPI communication after a supply reset, the MODE1 register is sent on the MISO line.
- If the number of clock pulses within CSB low is not a multiple of 24, then the current SPI write command is ignored. The error is logged in the STATUS2 register; the SPIERR bit is set.
- Messages written to invalid locations (such as test or reserved registers) are ignored.
- When VDD is in under voltage condition, there will be no response on SPI. Both incoming and outgoing messages are suspended.
- The watchdog command is truncated if a SPI command is happening (CSB rising edge) at the same time. It is recommended to avoid polling the SPI at the watchdog refresh period.

All information provided in this document is subject to legal disclaimers.

© 2026 NXP B.V. All rights reserved.

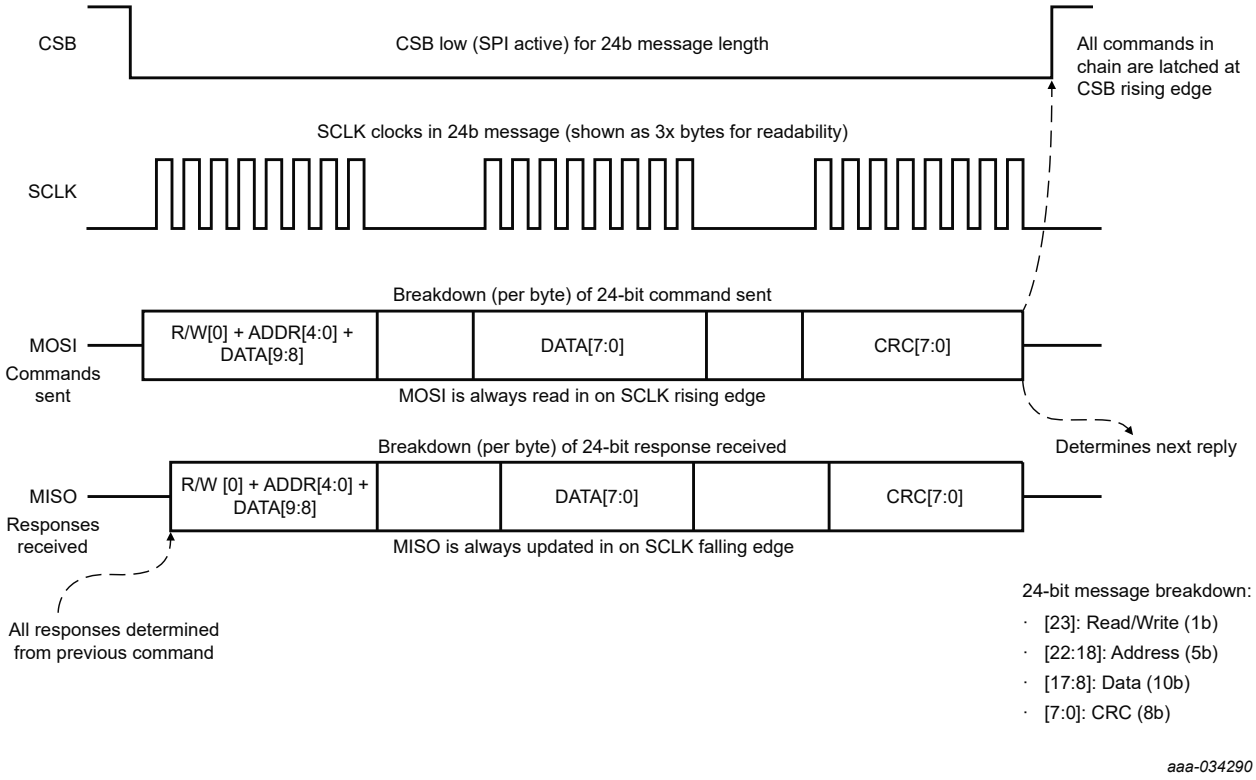

Figure 36. Single-device SPI message breakdown

11.13.2 SPI CRC

When transmitting a message, both the GD3160 and the spi controller calculate the CRC of the first 16 SPI bits [23:8] and append an eight bit CRC value as bits [7:0]. This completes the 24-bit SPI message.

The CRC is calculated using the polynomial x8 + x5 + x3 + x2 + x +1 (100101111) with a seed value of binary 11111111 (if the lookup table method is used, the seed value is 0x42). If the CRC of the received message matches its calculated CRC, then the message was received correctly (for CRC calculation example refer to "GD31xx Device Driver Example Code" on www.nxp.com/GD3160).

If the CRC of the received message does not match the calculated CRC, there was a receive error and the data is not saved or used. The error is also logged in the STATUS2 register; the SPIERR bit is set.

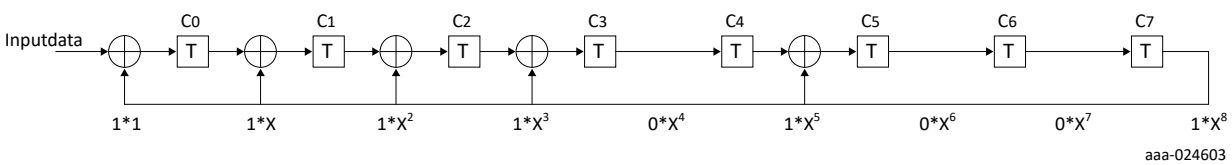

Figure 37. CRC Polynomial

11.13.3 Protection of register configuration

Most of the SPI registers are protected from inadvertent modification. They are intended to be configured at power up and left unchanged during normal operation, while the IGBT is being PWMed. This protection ensures that operating modes, fault masks, fault thresholds, and fault filter times are unchanged unless the GD3160 receives clear instructions to change them.

All information provided in this document is subject to legal disclaimers.

© 2026 NXP B.V. All rights reserved.

The registers that are protected are the CONFIG1 to 7 registers, the MODE1 and 2 registers, the RMSK1 and RMSK2 registers, and the MSK1 and 2 registers, except for VCCREG, SEGDRV_TH and SEGDRVDLY settings. The GD3160 must be in Configuration mode (CONFIG_EN bit in the MODE2 register = Logic 1) to alter these registers.

A CRC of all the protected registers is calculated every watchdog cycle. This value is compared to a CRC that was calculated when the IC exited Configuration mode, including when the CONFIGAOUT, OT_TH, or OTW_TH registers were updated. A discrepancy between the two CRCs triggers a CONFIGCRCERR and is reported at the INTB pin and in the STATUS 2 register.

11.13.4 Clearing fault bits

There are several ways to clear a fault bit (contained in the STATUS1 and STATUS2 registers) on GD3160. Clearing a fault does not require reading the register beforehand.

1. Writing a Logic 1 to the faulted bit in the STATUS1 or STATUS2 register. Writing a Logic 1 to the faulted bit will clear the faulted bit if the fault is no longer present. This procedure clears the BIST_FAIL , POR_1, and POR_2 bits, if set. This is the most common method of clearing a fault.
2. Reset the GD3160 logic by toggling the RESET bit in the MODE2 register. Logic 1 at the RESET bit not only resets the SPI fault bits, it also returns all the low-voltage and high-voltage domains configurable registers to their default values. When Logic 0 is written, the fault bit(s) will be Logic 0 unless the fault is still present.
3. Conduct BIST test by toggling the BIST bit in the MODE2 register. Logic 1 at this bit forces the low-voltage and high-voltage domains to conduct a BIST. Upon exiting BIST, the low-voltage and high-voltage domain's logic will be reset to the default state. The only exception is that the BIST procedure will not clear the BIST_FAIL bit, if that happens to be set.
4. All SPI registers, including fault bits, will be reset to their default values at power up or upon a POR of the low-voltage domain logic supply.

Exceptions for VDD undervoltage:

- To avoid reporting spurious faults at power up, the GD3160 latches no faults until VDD is in regulation. If a VDD_UVOV fault is detected, the VDD supply may have fallen to a level that triggers a logic POR. The MCU can respond by assuming a POR has occurred and reinitialize the GD3160 or it can read a programmed register to see if it has changed.

Exception when HV domain remains powered:

- When VDD falls below VDDUV_TH, the low-voltage domain no longer sends messages to the high-voltage domain. The high-voltage domain detects a loss communication and reverts to its fail-safe mode. When VDD returns to a regulated state, the high-voltage domain may have residual latched faults.

11.13.5 Daisy chain operation

Daisy chain operation reduces the total MCU pin count for SPI and increases message length and polling times. The recommended implementation for inverter applications requiring functional safety is to have two parallel chains of three devices: one daisy chain for three high-side gate drivers, one daisy chain for three low-side gate drivers).

All GD3160 in each group have a single CSB connection. The MCU's MOSI pin is connected to the MOSI pin of the first GD3160 in the chain. The MISO pin of the first GD3160 is connected to the MOSI pin of the 2nd GD3160, and so on. An example implementation is shown in Figure 38.

Data from the MCU is clocked through the daisy chain to each device while the CSB bit is commanded low by the MCU. During each SCLK clock cycle, output status from the daisy chain is transferred to the MCU via the MISO line. On the rising edge of CSB, data stored in the input registers is latched within each GD3160. An example implementation is shown in Figure 39.

All information provided in this document is subject to legal disclaimers.

© 2026 NXP B.V. All rights reserved.

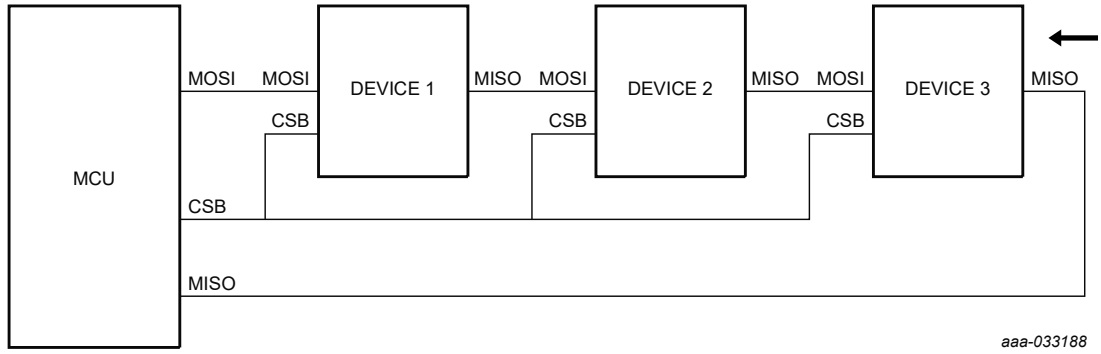

Figure 38. Daisy chain connection

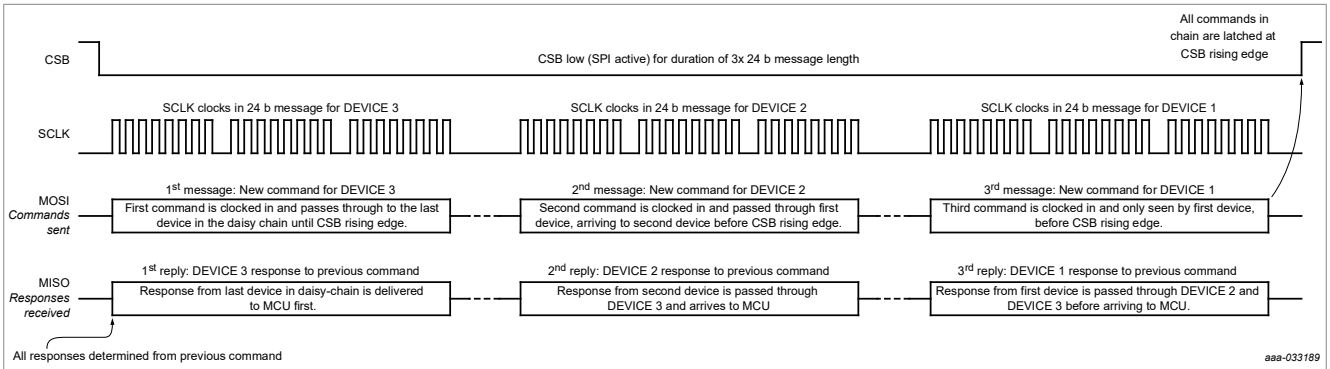

Figure 39. Daisy chain data transmission

All information provided in this document is subject to legal disclaimers.

© 2026 NXP B.V. All rights reserved.

11.14 SPI registers

The SPI registers and their definitions are shown in Table 25.

Table 25. SPI registers

SPI COMMANDS		Rb/W	ADDR[4:0]	DATA9	DATA8	DATA7	DATA6	DATA5	DATA4	DATA3	DATA2	DATA1	DATA0	CRC
Name	Description	[23]	[22:18]	[17]	[16]	[15]	[14]	[13]	[12]	[11]	[10]	[9]	[8]	[7:0]
MODE1	Operating Mode 1	0/1	0x00	AOUT	SEGDRV	AMC	TIME_2	SSD	2LTO	ACTCLMP	DESAT	SCSNS	OCSNS	-
MODE2	Operating Mode 2	0/1	0x01	SCFF	RTRPT	RTMON_ CFG	FSISOEN	TISNS_EN	—	BIST	CONFIG_EN	RESET	-	-
CONFIG1	Configuration 1	0/1	0x02	UV_LATCH	UV_TH [2]	UV_TH [1]	UV_TH [0]	OCTH [2]	OCTH [1]	OCTH [0]	OCFILT [2]	OCFILT [1]	OCFILT [0]	-
CONFIG2	Configuration 2	0/1	0x03	2LTOV [3]	2LTOV [2]	2LTOV [1]	2LTOV [0]	SCTH [2]	SCTH [1]	SCTH [0]	SCFILT [2]	SCFILT [1]	SCFILT [0]	-
CONFIG3	Configuration 3	0/1	0x04	INTBFS	SEG DRVDLY [2]	SEG DRVDLY [1]	SEG DRVDLY [0]	SSD_CUR [2]	SSD_CUR [1]	SSD_CUR [0]	SSDT [2]	SSDT [1]	SSDT [0]	-
CONFIG4	Configuration 4	0/1	0x05	DESAT_FLT [1]	DESAT_FLT [0]	SEGDRV_ TH [2]	SEGDRV_ TH [1]	SEGDRV_ TH [0]	IDESAT [1]	IDESAT [0]	DESAT_LEB [2]	DESAT_LEB [1]	DESAT_LEB [0]	-
CONFIG5	Configuration 5	0/1	0x06	DEADT [3]	DEADT [2]	DEADT [1]	DEADT [0]	—	AOU TCONF [1]	AOU TCONF [0]	COMERR CONF [2]	COMERR CONF [1]	COMERR CONF [0]	
CONFIG6	Configuration 6	0/1	0x07	VCCREG[2]	VCCREG[1]	VCCREG[0]	—	WDTO [1]	WDTO [0]	RTMONDLY [3]	RTMONDLY [2]	RTMONDLY [1]	RTMONDLY [0]	
CONFIG7	Configuration 7	0/1	0x08	—	—	—	—	—	—	DESAT_TH [3]	DESAT_TH [2]	DESAT_TH [1]	DESAT_TH [0]	-
OT_TH	Config OT Threshold	0/1	0x09	OT_TH [9]	OT_TH [8]	OT_TH [7]	OT_TH [6]	OT_TH [5]	OT_TH [4]	OT_TH [3]	OT_TH [2]	OT_TH [1]	OT_TH [0]	-
OTW_TH	Conf. OT Warn Thresh	0/1	0x0A	OTW_TH [9]	OTW_TH [8]	OTW_TH [7]	OTW_TH [6]	OTW_TH [5]	OTW_TH [4]	OTW_TH [3]	OTW_TH [2]	OTW_TH [1]	OTW_TH [0]	-
STATUS1	Status 1	0/1	0x0B	VCCOV	VCC REGUV	VSUPOV	OTSD_IC	OTSD	OTW	CLAMP	DESAT	SC	OC	-
MSK1	Status Mask 1	0/1	0x0C	VCCOVM	VCC REGUVM	VSUPOVM	—	OTSDM	OTWM	CLAMPM	—	—	OCM	-
RMSK1	Report Mask 1	0/1	0x0D	VCCOVA	VCC REGUVA	VSUPOVA	OTSD_ICA	OTSDA	OTWA	CLAMPA	DESATA	SCA	OCA	-
STATUS2	Status 2	0/1	0x0E	BIST_FAIL	VDD_UVOV	DTFLT	SPIERR	CONFCR CERR	RTMON_ FLT	WDOG_FLT	COMERR	VREF_UV	VEE_OOR	-
MSK2	Status Mask 2	0/1	0x0F	—	—	DTFLTM	SPIERRM	CONFCR CERRM	RTMON_ FLTM	WDOG_ FLTM	COMERRM	—	VEE_OORM	-
RMSK2	Report Mask 2	0/1	0x10	—	—	DTFLTA	—	—	—	—	—	VREF_UVA	VEE_OORA	-
STATUS3	Status 3	0/1	0x11	POR_1	POR_2	FSISO	PWM	PWMALT	FSSTATE	FSENB	INTB	INTA	VRTMON	-
CONFIGAOUT	AOUT Configuration	0/1	0x12	ITSNS[1]	ITSNS[0]	TOFST[1]	TOFST[0]	TRNG	AMU XINRNG	AMUXINOS[1]	AMUXINOS[0]	AOUT_SEL [1]	AOUT_SEL [0]	-
REQADC	REQUEST ADC (command)	0	0x13	—	—	—	—	—	—	AMUX_SEL [3]	AMUX_SEL [2]	AMUX_SEL [1]	AMUX_SEL [0]	-
	REQUEST ADC (response)	0	0x13	ADCVAL [9]	ADCVAL [8]	ADCVAL [7]	ADCVAL [6]	ADCVAL [5]	ADCVAL [4]	ADCVAL [3]	ADCVAL [2]	ADCVAL [1]	ADCVAL [0]	-
REQBIST	REQUEST BIST (command)	0	0x14	0	0	0	0	0	0	0	0	0	0	-
	REQUEST BIST (response)	0	0x14	REQBIST [9]	REQBIST [8]	REQBIST [7]	REQBIST [6]	REQBIST [5]	REQBIST [4]	REQBIST [3]	REQBIST [2]	REQBIST [1]	REQBIST [0]	-
ID	Device ID	0	0x15	—	—	VDD3	LVDC[2]	LVDC[1]	LVDC[0]	FS3ST	HVDC[2]	HVDC[1]	HVDC[0]	-
—	Not used	—	0x16 to 0x1F	—	—	—	—	—	—	—	—	—	-	-

11.14.1 MODE1 register (ADDR = 0x00)

The MODE1 register settings enable or disable major functions of the GD3160, mostly regarding power device protections.

Table 26. MODE1 register bit readout

	Rb/W	ADDR [4:0]	DATA9	DATA8	DATA7	DATA6	DATA5	DATA4	DATA3	DATA2	DATA1	DATA0	CRC
Bit #	[23]	[22:18]	[17]	[16]	[15]	[14]	[13]	[12]	[11]	[10]	[9]	[8]	[7:0]
Name/Value	0/1	0x00	AOUT	SEGDRV	AMC	TIME_2	SSD	2LTO	ACTCLMP	DESAT	SCSNS	OCSNS	—
Write locked in normal mode	—	—	yes	yes	yes	yes	yes	yes	yes	yes	yes	yes	—
Default	—	—	0	0	1	1	1	1	0	1	0	0	—

All information provided in this document is subject to legal disclaimers.

© 2026 NXP B.V. All rights reserved.

Table 27. MODE1 register description

Bit	Bit function	Logic 0	Logic 1
AOUT	Configure operation of AOUT pin, reporting one or two signals	AOUT reports power device temperature only, continuously running at ~3.9 kHz. Duty cycle is a function of the ADC-converted TSENSEA result (10 % = 0x000, 90 % = 0x3FF). [1]	AOUT reports power device temperature and a second quantity, set by AOUT_SEL. Signals appear at AOUT alternatively at ~3.9 kHz and ~5.6 kHz periods.
SEGDRV	Segmented drive enable/disable bit	Segmented drive feature disabled.[1]	Segmented drive feature enabled.
AMC	Active Miller clamp enable/disable bit	Active Miller clamp feature disabled. AMC transistor is deactivated, but the AMC_th comparator is still operational.	Active Miller clamp feature enabled.[1]
TIME_2	Timer scaling bit for SSDT, RTMONDLY, DEADT, t_{VCECR} and t_{SSD_SEG}	Timers are multiplied by 2.	Timers are not scaled.[1]
SSD	Soft shutdown enable/disable bit (for DESAT and SC conditions only, otherwise SSD is enabled)	Soft shutdown disabled.	Soft shutdown enabled.[1]
2LTO	Two-level turn-off enable/disable bit (for DESAT and SC conditions only)	Two-level turn-off disabled.	Two-level turn-off enabled.[1]
ACTCLMP	V_{CE} Active clamping enable/disable bit	V_{CE} Active clamping disabled.[1]	Vce Active clamping enabled, if SEGDRV = 0.
DESAT	V_{CE} DESAT fault management enable/disable bit	V_{CE} DESAT fault management disabled.	V_{CE} DESAT fault management enabled.[1]
SCSNS	Short current fault management enable/disable bit	Disable short current fault management.[1]	Enable short current fault management.
OCSNS	Overcurrent fault management enable/disable bit	Disable overcurrent fault management.[1]	Enable overcurrent fault management, if SEGDRV = 0 and ACTCLAMP = 0.

[1] Default value

11.14.2 MODE2 register (ADDR = 0x01)

The MODE2 register settings enable or disable critical features of the GD3160, and include commands for entering configuration mode (CONFIG), configuring INTA (RTRPT, RTMON_CFG), enabling built-in self-test (BIST), resetting the device (RESET), enabling control by FSISO, and others.

Table 28. Mode2 register bit readout

	Rb/W	ADDR [4:0]	DATA9	DATA8	DATA7	DATA6	DATA5	DATA4	DATA3	DATA2	DATA1	DATA0	CRC
Bit #	[23]	[22:18]	[17]	[16]	[15]	[14]	[13]	[12]	[11]	[10]	[9]	[8]	[7:0]
Name/Value	0/1	0x01	SCFF	RTRPT	RTMON_CFG	FSISOEN	TISNS_EN	—	BIST	CONFIG_EN	RESET	—	—
Write locked in normal mode	—	—	yes	yes	yes	yes	yes	yes	yes	no	yes	yes	—
Default	—	—	1	0	0	1	1	0	0	0	0	0	—

Table 29. Mode2 register description

Bit	Bit function	Logic 0	Logic 1
SCFF	Short-circuit Fast-filter mode	Normal short-circuit filter (SCFILT) times used.	Short-circuit filter times (SCFILT) are 300 ns faster.[1]
RTRPT	Real-time report (VGE/VCE) on INTA enable/disable bit	Real-time report disabled. INTA is used for fault monitor/report. [1]	Real-time report on INTA enabled (all fault reporting on INTB).
RTMON_CFG	Real-time monitor/report selection	Report/Monitor using VGE.[1]	Report using VCE. This will also automatically mask the RFTMON_FLT. Real time Monitoring using VCE is not possible.
FSISOEN	FSISO enable/disable	FSISO pin is not active; pin state is ignored.	FSISO pin is active. FSISO pin controls gate output when high. [1]
TISNS_EN	Temperature sense excitation selection	Internal current source disabled. For use with thermistor-based solutions. (use an	Current source (0.25 mA to 1.0 mA, per ITSNS[1:0]) activated. For use with diode-based solutions. [1]

All information provided in this document is subject to legal disclaimers.

© 2026 NXP B.V. All rights reserved.

Table 29. Mode2 register description...*continued*

Bit	Bit function	Logic 0	Logic 1
		external resistor network to bias from VREF)	
BIST	BIST enable/disable	BIST feature is not active [1]	Requests BIST of LV and HV die. PWMing is disabled until BIST is complete and BIST is reset to Logic 0. IGBT is OFF during BIST.
CONFIG_EN	SPI register configuration enable/ disable	Configuration of SPI registers is disabled. Normal operation.[1]	Enables Configuration of the SPI registers. IGBT gate is OFF during Configuration. CRC value of configured registers is calculated and stored on CSB rising edge when exiting configuration. PWMing is allowed on the next PWM rising edge after bit = 0. INTB pin reports faults normally.
RESET	Reset enable/disable	GD31SiC not in Reset. Normal operating mode. [1]	GD31SiC in reset. All configuration registers are set to default values. PWMing is disabled. Configuration is disabled. IGBT Is OFF. INTB = 0.

[1] Default value

11.14.3 CONFIG1 register (ADDR = 0x02)

The CONFIG1 register contains ranges for overcurrent (voltage) threshold level, overcurrent filter time, gate supply undervoltage threshold level, and selects behavior following a gate supply undervoltage event (latching or non-latching turn-off).

Table 30. CONFIG1 register bit readout

	Rb/W	ADDR [4:0]	DATA9	DATA8	DATA7	DATA6	DATA5	DATA4	DATA3	DATA2	DATA1	DATA0	CRC
Bit #	[23]	[22:18]	[17]	[16]	[15]	[14]	[13]	[12]	[11]	[10]	[9]	[8]	[7:0]
Name/Value	0/1	0x02	UV_ LATCH	UV_TH [2]	UV_TH [1]	UV_TH [0]	OCTH [2]	OCTH [1]	OCTH [0]	OCFILT [2]	OCFILT [1]	OCFILT [0]	—
Write locked in normal mode	—	—	yes	yes	yes	yes	yes	yes	yes	yes	yes	yes	—
Default	—	—	0	0	1	1	0	1	1	0	1	1	—

Table 31. CONFIG1 bit description

Bit	Bit function	Logic 0	Logic 1
UV_LATCH	Configure VCCREG undervoltage behavior	PWM is gated by VCCREG undervoltage condition, but not latched off. INTA or INTB follows the VCCREG UV condition. VCCREG_UV SPI fault bit is latched. PWM disabled during VCCREG UV condition only. PWM is allowed upon VCCREG recovery. [1]	PWM is latched off upon VCCREG undervoltage condition, until fault is cleared. INTA or INTB follows the VCCREG UV fault. SPI fault bit is latched. PWM is disabled until the VCCREG_UV fault bit is cleared.

[1] Default value

Table 32. CONFIG1 parameter ranges

Bit value [2:0]	VCCREG undervoltage threshold UV_TH[2:0]	Overcurrent fault detection threshold OCTH[2:0]	Overcurrent fault detection filter time OCFILT[2:0]
0x00	10.0 V	0.25 V	0.5 µs
0x01	10.5 V	0.50 V	1.0 µs
0x02	11.0 V	0.75 V	1.5 µs
0x03	11.5 V [1]	1.00 V [1]	2.0 µs [1]
0x04	12.0 V	1.25 V	2.5 µs
0x05	12.5 V	1.50 V	3.0 µs

All information provided in this document is subject to legal disclaimers.

© 2026 NXP B.V. All rights reserved.

Table 32. CONFIG1 parameter ranges*...continued*

Bit value [2:0]	VCCREG undervoltage threshold UV_TH[2:0]	Overcurrent fault detection threshold OCTH[2:0]	Overcurrent fault detection filter time OCFILT[2:0]
0x06	13.0 V	1.75 V	3.5 µs
0x07	13.5 V	2.00 V	4.0 µs

[1] Default value

11.14.4 CONFIG2 register (ADDR = 0x03)

The CONFIG2 register contains selectable ranges for two-level turn-off voltage, short-circuit (voltage) threshold level, and short-circuit filter time. In setting the short-circuit filter time, the GD3160 also refers to the SCFF bit in MODE2 for Fast filter mode, decreasing the short-circuit filter time.

Table 33. CONFIG2 register bit readout

	Rb/W	ADDR [4:0]	DATA9	DATA8	DATA7	DATA6	DATA5	DATA4	DATA3	DATA2	DATA1	DATA0	CRC
Bit #	[23]	[22:18]	[17]	[16]	[15]	[14]	[13]	[12]	[11]	[10]	[9]	[8]	[7:0]
Name/Value	0/1	0x03	2LTOV [3]	2LTOV [2]	2LTOV [1]	2LTOV [0]	SCTH [2]	SCTH [1]	SCTH [0]	SCFILT [2]	SCFILT [1]	SCFILT [0]	—
Write locked in normal mode	—	—	yes	yes	yes	yes	yes	yes	yes	yes	yes	yes	—
Default	—	—	0	0	1	1	0	1	0	1	0	0	—

Table 34. CONFIG2 parameter ranges

Bit value [3:0]	Two-level turn-off (2LTO) voltage level 2LTOV[3:0]	Short-circuit fault detection threshold SCTH[2:0]	Short-circuit fault detection filter time SCFILT[2:0] + SCFF = 0[1]	Short-circuit fault detection filter time SCFILT[2:0] + SCFF = 1[1]
0x00	6.48 V	0.50 V	400 ns	100 ns
0x01	6.67 V	0.75 V	500 ns	200 ns
0x02	6.87 V	1.00 V [2]	600 ns	300 ns
0x03	7.08 V [2]	1.25 V	700 ns	400 ns
0x04	7.32 V	1.50 V	800 ns [3]	500 ns [2]
0x05	7.56 V	2.00 V	900 ns	600 ns
0x06	7.83 V	2.50 V	1000 ns	700 ns
0x07	8.13 V	3.00 V	1100 ns	800 ns
0x08	8.46 V	—	—	—
0x09	8.81 V	—	—	—
0x0A	9.19 V	—	—	—
0x0B	9.62 V	—	—	—
0x0C	10.09 V	—	—	—
0x0D	10.62 V	—	—	—
0x0E	11.21 V	—	—	—
0x0F	11.88 V	—	—	—

[1] SCFF is Short-circuit Fast Filter mode bit of MODE2 register
[2] Default value
[3] Default value upon changing SCFF value bit.

All information provided in this document is subject to legal disclaimers.

© 2026 NXP B.V. All rights reserved.

11.14.5 CONFIG3 register (ADDR = 0x04)

The CONFIG3 register contains selectable ranges for soft shutdown current, soft shutdown duration time, segmented drive activation delay, and selection of INTB behavior while in Fail-safe mode. The segmented drive activation delay time (SEGDRVDLY) is permanently unlocked, and can be changed in real-time without entering CONFIG mode.

Table 35. CONFIG3 register bit readout

	Rb/W	ADDR [4:0]	DATA9	DATA8	DATA7	DATA6	DATA5	DATA4	DATA3	DATA2	DATA1	DATA0	CRC
Bit #	[23]	[22:18]	[17]	[16]	[15]	[14]	[13]	[12]	[11]	[10]	[9]	[8]	[7:0]
Name/Value	0/1	0x04	INTBFS	SEGDRVDLY[2]	SEGDRVDLY[1]	SEGDRVDLY[0]	SSD_CUR[2]	SSD_CUR[1]	SSD_CUR[0]	SSDT[2]	SSDT[1]	SSDT[0]	—
Write locked in Normal mode	—	—	yes	no	no	no	yes	yes	yes	yes	yes	yes	—
Default	—	—	0	0	0	0	1	0	0	1	0	0	—

Table 36. CONFIG3 bit descriptions

Bit	Bit function	Logic 0	Logic 1
INTBFS	Configure the behavior of the INTB pin in Fail-safe mode	The state of FSENB does not affect INTB. INTB does not indicate the GD3160 is in Fail-safe mode. [1]	INTB indicates the GD3160 is in Fail-safe mode. When FSENB = 0, then INTB = 0.

[1] Default value

Table 37. CONFIG3 parameter ranges

Bit value [2:0]	Segmented drive activation delay SEGDRVDLY[2:0]	Soft shutdown current SSD_CUR[2:0]	Soft shutdown time duration, no scaling SSDT[2:0] + TIME_2 = 0[1]	Soft shutdown time duration, scaled down SSDT[2:0] + TIME_2 = 1[1]
0x00	0 ns [2]	0.10 A	2000 ns	1000 ns
0x01	20 ns	0.20 A	3000 ns	1500 ns
0x02	40 ns	0.30 A	4000 ns	2000 ns
0x03	60 ns	0.40 A	5000 ns	2500 ns
0x04	80 ns	0.50 A [2]	6000 ns[3]	3000 ns [2]
0x05	100 ns	0.70 A	7000 ns	3500 ns
0x06	120 ns	0.90 A	8000 ns	4000 ns
0x07	140 ns	1.00 A	9000 ns	4500 ns

[1] TIME_2_is Timer scaling bit of MODE1 register
[2] Default value
[3] Default value upon changing TIME_2 bit.

11.14.6 CONFIG4 register (ADDR = 0x05)

The CONFIG4 register contains selectable ranges for leading edge blanking, detection filter time, and the charge current associated with a desaturation fault, as well as the segmented drive voltage threshold. The segmented drive threshold value (SEGDRV_TH) is permanently unlocked, and can be changed in real-time without entering CONFIG mode.

All information provided in this document is subject to legal disclaimers.

© 2026 NXP B.V. All rights reserved.

Table 38. CONFIG4 register bit readout

	Rb/W	ADDR [4:0]	DATA9	DATA8	DATA7	DATA6	DATA5	DATA4	DATA3	DATA2	DATA1	DATA0	CRC
Bit #	[23]	[22:18]	[17]	[16]	[15]	[14]	[13]	[12]	[11]	[10]	[9]	[8]	[7:0]
Name/Value	0/1	0x05	DESAT_ FLT [1]	DESAT_ FLT [0]	SEGDRV_ TH [2]	SEGDRV_ TH [1]	SEGDRV_ TH [0]	IDESAT [1]	IDESAT [0]	DESAT_ LEB [2]	DESAT_ LEB [1]	DESAT_ LEB [0]	—
Write locked in normal mode	—	—	yes	yes	no	no	no	yes	yes	yes	yes	yes	—
Default	—	—	0	1	0	1	1	0	1	0	1	1	—

Table 39. CONFIG4 parameter ranges

Bit value [2:0]	Desaturation detection filter time DESAT_FLT[1:0]	Segmented drive voltage threshold SEGDRV_TH[2:0]	Charge current for desaturation detection IDESAT[1:0]	Desaturation detection leading edge blanking time DESAT_LEB[2:0]
0x00	70.0 ns	3.0 V	250 µA	60 ns
0x01	110.0 ns [1]	4.0 V	500 µA [1]	120 ns
0x02	190.0 ns	5.0 V	750 µA	180 ns
0x03	300.0 ns	6.0 V [1]	1000 µA	240 ns [1]
0x04	—	7.0 V	—	340 ns
0x05	—	8.0 V	—	460 ns
0x06	—	9.0 V	—	580 ns
0x07	—	10.0 V	—	700 ns

[1] Default value

11.14.7 CONFIG5 register (ADDR = 0x06)

The CONFIG5 register contains selectable ranges for mandatory PWM dead time, distribution of results on AOUT and die-to-die communication error tracking. The AOUTCONF bit determines the ratio of readings from the power device temperature (TSENSEA) vs. quantity determined by AOUT_SEL (including AMUXIN, VCC, VCCREG, VEE, and others) as reported over the AOUT pin.

Table 40. CONFIG5 register

	Rb/W	ADDR [4:0]	DATA9	DATA8	DATA7	DATA6	DATA5	DATA4	DATA3	DATA2	DATA1	DATA0	CRC
Bit #	[23]	[22:18]	[17]	[16]	[15]	[14]	[13]	[12]	[11]	[10]	[9]	[8]	[7:0]
Name/Value	0/1	0x06	DEADT [3]	DEADT [2]	DEADT [1]	DEADT [0]	—	AOUT CONF [1]	AOUT CONF [0]	COMERR CONF [2]	COMERR CONF [1]	COMERR CONF [0]	—
Write locked in normal mode	—	—	yes	yes	yes	yes	—	yes	yes	yes	yes	yes	—
Default	—	—	1	1	1	1	0	0	0	1	1	0	—

Table 41. CONFIG5 parameter ranges

Bit value [3:0]	PWM dead time DEADT[3:0] + TIME_2 = 0 [1]	PWM dead time DEADT[3:0] + TIME_2 = 1 [1]	TSENSEA vs. AOUT_SEL readings ratio at AOUT AOUTCONF[1:0]	Number of errors to set a COMERR fault COMERRCONF[2:1]	Number of valid messages to decrement COMERR counter COMERRCONF[0]
0x00	0.16 µs	0.10 µs	1/1 [2]	4	1 [2]
0x01	0.24 µs	0.14 µs	1/2	8	4
0x02	0.44 µs	0.24 µs	1/4	16	—
0x03	0.76 µs	0.40 µs	1/8	32 [2]	—
0x04	1.04 µs	0.54 µs	—	—	—
0x05	1.52 µs	0.78 µs	—	—	—
0x06	2.04 µs	1.04 µs	—	—	—
0x07	2.52 µs	1.28 µs	—	—	—

All information provided in this document is subject to legal disclaimers.

© 2026 NXP B.V. All rights reserved.

Table 41. CONFIG5 parameter ranges*...continued*

Bit value [3:0]	PWM dead time DEADT[3:0] + TIME_2 = 0[1]	PWM dead time DEADT[3:0] + TIME_2 = 1[1]	TSENSEA vs. AOUT_SEL readings ratio at AOUT AOUTCONF[1:0]	Number of errors to set a COMERR fault COMERRCONF[2:1]	Number of valid messages to decrement COMERR counter COMERRCONF[0]
0x08	3.04 µs	1.54 µs	—	—	—
0x09	3.52 µs	1.78 µs	—	—	—
0x0A	4.04 µs	2.04 µs	—	—	—
0x0B	4.52 µs	2.28 µs	—	—	—
0x0C	5.04 µs	2.54 µs	—	—	—
0x0D	5.52 µs	2.78 µs	—	—	—
0x0E	6.04 µs	3.04 µs	—	—	—
0x0F	6.52 µs [3]	3.28 µs[2]	—	—	—

[1] TIME_2_is Timer scaling bit of MODE1 register
[2] Default value
[3] Default value upon changing TIME_2 bit

11.14.8 CONFIG6 register (ADDR = 0x07)

The CONFIG6 register contains selectable ranges for the gate supply (VCCREG[2:0]), the LV/HV domain watchdog timeout (WDTO[1:0]), and the PWM/real-time feedback coherency check delay (RTMONDLY[3:0]).

The VCCREG setpoint is permanently unlocked. It can be changed in real-time without entering CONFIG mode.

Table 42. CONFIG6 register bit readout

	Rb/W	ADDR [4:0]	DATA9	DATA8	DATA7	DATA6	DATA5	DATA4	DATA3	DATA2	DATA1	DATA0	CRC
Bit #	[23]	[22:18]	[17]	[16]	[15]	[14]	[13]	[12]	[11]	[10]	[9]	[8]	[7:0]
Name/Value	0/1	0x07	VCCREG [2]	VCCREG [1]	VCCREG [0]	—	WDTO [1]	WDTO [0]	RTM ONDLY [3]	RTM ONDLY [2]	RTM ONDLY [1]	RTM ONDLY [0]	—
Write locked in normal mode	—	—	no	no	no	—	yes	yes	yes	yes	yes	yes	—
Default	—	—	0	0	1	0	1	1	1	0	1	0	—

Table 43. CONFIG6 parameter ranges

Bit value [3:0]	Positive gate supply regulation setpoint VCCREG[2:0]	Die-to-die communications watchdog timeout WDTO[1:0]	PWM vs. real-time monitor delay RTMONDLY[3:0] + TIME_2 = 0[1]	PWM vs. Real-time monitor delay RTMONDLY[3:0] + TIME_2 = 1[1]
0x00	14.0 V	260 µs	—[2]	—[2]
0x01	15.0 V [3]	500 µs	400 ns	—[2]
0x02	16.0 V	1000 µs	800 ns	400 ns
0x03	17.0 V	2000 µs [3]	1200 ns	600 ns
0x04	18.0 V	—	1600 ns	800 ns
0x05	19.0 V	—	2000 ns	1000 ns
0x06	20.0 V	—	2400 ns	1200 ns
0x07	21.0 V	—	2800 ns	1400 ns
0x08	—	—	3200 ns	1600 ns
0x09	—	—	3600 ns	1800 ns
0x0A	—	—	4000 ns [4]	2000 ns[3]
0x0B	—	—	4800 ns	2400 ns
0x0C	—	—	5600 ns	2800 ns
0x0D	—	—	6400 ns	3200 ns
0x0E	—	—	7200 ns	3600 ns

All information provided in this document is subject to legal disclaimers.

© 2026 NXP B.V. All rights reserved.

Table 43. CONFIG6 parameter ranges*...continued*

Bit value [3:0]	Positive gate supply regulation setpoint VCCREG[2:0]	Die-to-die communications watchdog timeout WDTO[1:0]	PWM vs. real-time monitor delay RTMONDLY[3:0] + TIME_2 = 0[1]	PWM vs. Real-time monitor delay RTMONDLY[3:0] + TIME_2 = 1[1]
0x0F	—	—	8000 ns	4000 ns

[1] TIME_2_is timer scaling bit of MODE1 register
[2] Not used
[3] Default value
[4] Default value upon changing TIME_2 bit

11.14.9 CONFIG7 register (ADDR = 0x08)

The CONFIG7 register contains the selectable range for desaturation threshold voltage.

Table 44. CONFIG7 register bit readout

	Rb/W	ADDR [4:0]	DATA9	DATA8	DATA7	DATA6	DATA5	DATA4	DATA3	DATA2	DATA1	DATA0	CRC
Bit #	[23]	[22:18]	[17]	[16]	[15]	[14]	[13]	[12]	[11]	[10]	[9]	[8]	[7:0]
Name/Value	0/1	0x08	—	—	—	—	—	—	DESAT_ TH [3]	DESAT_ TH [2]	DESAT_ TH [1]	DESAT_ TH [0]	—
Write locked in normal mode	—	—	—	—	—	—	—	—	yes	yes	yes	yes	—
Default	—	—	0	0	0	0	0	0	1	0	1	0	—

Table 45. CONFIG7 parameter ranges

Bit value [3:0]	Desaturation fault threshold-voltage level DESAT_TH[3:0]
0x00	1.00 V
0x01	1.50 V
0x02	2.00 V
0x03	2.50 V
0x04	3.00 V
0x05	3.50 V
0x06	4.00 V
0x07	4.50 V
0x08	5.00 V
0x09	5.50 V
0x0A	6.00 V [1]
0x0B	6.50 V
0x0C	7.00 V
0x0D	8.00 V
0x0E	9.00 V
0x0F	10.00 V

[1] Default value

All information provided in this document is subject to legal disclaimers.

© 2026 NXP B.V. All rights reserved.

11.14.10 OT_TH register (ADDR = 0x09)

The OT_TH register sets the threshold level for a power device overtemperature event. The post-converted TSENSEA result is automatically compared to this threshold to evaluate for an overtemperature fault. The OT_TH register is permanently unlocked; CONFIG mode is not required to modify the OT_TH register values. These values may be changed on-the-fly and may be changed according to system or application demands.

Table 46. OT_TH register bit readout

	Rb/W	ADDR [4:0]	DATA9	DATA8	DATA7	DATA6	DATA5	DATA4	DATA3	DATA2	DATA1	DATA0	CRC
Bit #	[23]	[22:18]	[17]	[16]	[15]	[14]	[13]	[12]	[11]	[10]	[9]	[8]	[7:0]
Name/Value	0/1	0x09	OT_TH [9]	OT_TH [8]	OT_TH [7]	OT_TH [6]	OT_TH [5]	OT_TH [4]	OT_TH [3]	OT_TH [2]	OT_TH [1]	OT_TH [0]	—
Write locked in normal mode	—	—	no	no	no	no	no	no	no	no	no	no	—
Default	—	—	0	0	1	1	1	1	1	1	1	1	—

The characteristic for the overtemperature shutdown threshold, given as a voltage at the TSENSEA pin, is given in Equation 4.

$$V_{\mathrm{OT_TH}} = \mathrm{OT_TH}[9:0] \times \frac{5.0V}{1023} \tag{4}$$

11.14.11 OTW_TH register (ADDR = 0x0A)

The OTW_TH register sets the threshold level for a power device overtemperature warning event. The post-converted TSENSEA result is automatically compared to this threshold to evaluate for an overtemperature warning condition. The OTW_TH register is permanently unlocked, CONFIG mode is not required to modify the OTW_TH register values. These values may be changed on-the-fly and may be changed according to system or application demands.

Table 47. OTW_TH (IGBT overtemperature warning threshold register)

	Rb/W	ADDR [4:0]	DATA9	DATA8	DATA7	DATA6	DATA5	DATA4	DATA3	DATA2	DATA1	DATA0	CRC
Bit #	[23]	[22:18]	[17]	[16]	[15]	[14]	[13]	[12]	[11]	[10]	[9]	[8]	[7:0]
Name/Value	0/1	0x0A	OTW_TH [9]	OTW_TH [8]	OTW_TH [7]	OTW_TH [6]	OTW_TH [5]	OTW_TH [4]	OTW_TH [3]	OTW_TH [2]	OTW_TH [1]	OTW_TH [0]	—
Write locked in normal mode	—	—	no	no	no	no	no	no	no	no	no	no	—
Default	—	—	1	1	1	1	1	1	1	1	1	1	—

The characteristic for the overtemperature warning shutdown threshold, given as a voltage at the TSENSEA pin, is given in Equation 5.

$$V_{\mathrm{OTW_TH}} = \mathrm{OTW_TH}[9:0] \times \frac{5.0V}{1023} \tag{5}$$

11.14.12 STATUS1 register (ADDR = 0x0B)

The STATUS1 register details fault status. Fault bits are cleared on power up, and if not masked, upon a fault the corresponding fault bit is set to '1' and latched. Write '1' operations to the STATUS1 register are used to clear latched faults (the GD3160 does not need to be in CONFIG mode to do this) and return the device to normal functionality.

All information provided in this document is subject to legal disclaimers.

© 2026 NXP B.V. All rights reserved.

Table 48. STATUS1 register bit readout

	Rb/W	ADDR [4:0]	DATA9	DATA8	DATA7	DATA6	DATA5	DATA4	DATA3	DATA2	DATA1	DATA0	CRC
Bit #	[23]	[22:18]	[17]	[16]	[15]	[14]	[13]	[12]	[11]	[10]	[9]	[8]	[7:0]
Name/Value	0/1	0x0B	VCCOV	VCCREGUV	VSUPOV	OTSD_IC	OTSD	OTW	CLAMP	DESAT	SC	OC	—
Default	—	—	0	0	0	0	0	0	0	0	0	0	—

Table 49. STATUS1 register description

Bit	Logic 1 indicates:	Fault latched	PWMing disabled	IGBT turn off method
VCCOV	VCC overvoltage	Yes	Yes, GL = 1, AMC = 1 if enabled	Normal
VCCREGUV [1]	VCCREG undervoltage	Yes	Yes, GL = 1, AMC = 1 if enabled	Normal
VSUPOV	VSUP overvoltage	Yes	Yes, GL = 1, AMC = 1 if enabled	Normal
OTSD_IC	Overtemperature shutdown of LV domain or HV domain	Yes	Yes, GL = 1, AMC = 1 if enabled	Normal
OTSD	Overtemperature shutdown of IGBT	Yes	Yes, GL = 1, AMC = 1 if enabled	Normal
OTW	Overtemperature warning of IGBT	Yes	No	Not turned off
CLAMP [2]	V_{CE} clamp event	Yes	Yes, GL = 1, AMC = 1 if enabled	I_{SSD} defaults to lowest setting
DESAT	V_{CE} desaturation event	Yes	Yes, GL = 1, AMC = 1 if enabled	SSD, 2LTO if enabled
SC	IGBT short-circuit	Yes	Yes, GL = 1, AMC = 1 if enabled	SSD, 2LTO if enabled
OC	IGBT overcurrent	Yes	No	SSD, if enabled

[1] At power up, a VCCREGUV fault should not be latched or reported. The UV_LATCH bit allows PWMing if the VCCREG supply recovers from an UV condition. INTB follows fault condition.
[2] During V_{CE} clamp activation, ISSD is activated regardless of the SSD mode bit.

11.14.13 MSK1 register (ADDR = 0x0C)

The MSK1 register determines bit-for-bit the faults to be reported to INTB or INTA from the STATUS1 register. The GD3160 must be in CONFIG mode for the mask settings to be changed. A value of 0 for the fault mask bit means that the corresponding fault is masked, a value of 1 means that the corresponding fault is unmasked. Response when masked or unmasked for each fault is described in Table 73. Not all faults may be masked (such as SC and DESAT).

Table 50. MSK1 register bit readout

	Rb/W	ADDR [4:0]	DATA9	DATA8	DATA7	DATA6	DATA5	DATA4	DATA3	DATA2	DATA1	DATA0	CRC
Bit #	[23]	[22:18]	[17]	[16]	[15]	[14]	[13]	[12]	[11]	[10]	[9]	[8]	[7:0]
Name/Value	0/1	0x0C	VCCOVM	VCCREGUVM	VSUPOVM	—	OTSDM	OTWM	CLAMPM	—	—	OCM	—
Write locked in normal mode	—	—	yes	yes	yes	—	yes	yes	yes	—	—	yes	—
Default	—	—	1	1	0	0	0	0	1	0	0	1	—

Table 51. MSK1 register description

Bit	Logic 0 = masked	Logic 1 = not masked
VCCOVM	PWMing remains enabled, fault not latched or reported.	PWM disabled. GL = 1, AMC = 1 if enabled.
VCCREGUVM [1]	PWMing remains enabled until VCC falls below VCC_{UV_TH}.	PWM disabled. GL = 1, AMC = 1 if enabled.
VSUPOVM	PWMing remains enabled, fault not latched or reported.	PWM disabled. GL = 1, AMC = 1 if enabled.

All information provided in this document is subject to legal disclaimers.

© 2026 NXP B.V. All rights reserved.

Table 51. MSK1 register description...*continued*

Bit	Logic 0 = masked	Logic 1 = not masked
OTSDM	PWMing remains enabled, OTSD fault not latched or reported. Temp reported in ADCVAL and AOUT.	PWM disabled. GL = 1, AMC = 1 if enabled.
OTWM	PWMing remains enabled, OTW fault not latched or reported. Temp reported in ADCVAL.	PWM enabled.
CLAMPM	PWMing remains enabled, clamp active, fault not latched or reported.	PWM disabled. GL = 1, AMC = 1 if enabled.
OCM	No mask.	PWM enabled.

[1] At power up, a VCCREGUV fault should not be latched or reported. The UV_LATCH bit (in CONFIG1) allows PWMing if the VCCREG supply recovers from an UV condition. INTB follows fault condition. SPI bit is latched.

11.14.14 RMSK1 register (ADDR = 0x0D)

The RMSK1 register values determine which interrupt pin (either INTB or INTA) an unmasked fault is to be reported. A value of '0' reports the fault to INTB, and a value of '1' reports the fault to INTA. Recall that for INTA to be configured as a fault pin, the RTRPT bit must be set accordingly in the MODE2 register.

Table 52. RMSK1 register bit readout

	Rb/W	ADDR [4:0]	DATA9	DATA8	DATA7	DATA6	DATA5	DATA4	DATA3	DATA2	DATA1	DATA0	CRC
Bit #	[23]	[22:18]	[17]	[16]	[15]	[14]	[13]	[12]	[11]	[10]	[9]	[8]	[7:0]
Name/Value	0/1	0x0D	VCCOVA	VCCREGUVA	VSUPOVA	OTSD_ICA	OTSDA	OTWA	CLAMPA	DESATA	SCA	OCA	—
Write locked in normal mode	—	—	yes	yes	yes	yes	yes	yes	yes	yes	yes	yes	—
Default	—	—	0	0	0	0	1	0	0	1	1	0	—

Table 53. RMSK1 register description

Bit	Bit function	Logic 0	Logic 1
VCCOVA	Select INTx pin to report VCCOV fault to	Report fault on INTB [1]	Report fault on INTA
VCCREGUVA	Select INTx pin to report VCCREGUV fault to	Report fault on INTB [1]	Report fault on INTA
VSUPOVA	Select INTx pin to report VSUPOV fault to	Report fault on INTB [1]	Report fault on INTA
OTSD_ICA	Select INTx pin to report OTSD_IC fault to	Report fault on INTB [1]	Report fault on INTA
OTSDA	Select INTx pin to report OTSD fault to	Report fault on INTB	Report fault on INTA [1]
OTWA	Select INTx pin to report OTW fault to	Report fault on INTB [1]	Report fault on INTA
CLAMPA	Select INTx pin to report CLAMP fault to	Report fault on INTB [1]	Report fault on INTA
DESATA	Select INTx pin to report DESAT fault to	Report fault on INTB	Report fault on INTA [1]
SCA	Select INTx pin to report SC fault to	Report fault on INTB	Report fault on INTA [1]
OCA	Select INTx pin to report OC fault to	Report fault on INTB [1]	Report fault on INTA

[1] Default value

11.14.15 STATUS2 register (ADDR = 0x0E)

The STATUS2 register details fault status. Fault bits are cleared on power up, and if not masked, upon a fault the corresponding fault bit is set to '1' and latched. Write '1' operations to the STATUS2 register are used to clear latched faults and return the device to normal functionality.

All information provided in this document is subject to legal disclaimers.

© 2026 NXP B.V. All rights reserved.

Table 54. STATUS2 register bit readout

	Rb/W	ADDR [4:0]	DATA9	DATA8	DATA7	DATA6	DATA5	DATA4	DATA3	DATA2	DATA1	DATA0	CRC
Bit #	[23]	[22:18]	[17]	[16]	[15]	[14]	[13]	[12]	[11]	[10]	[9]	[8]	[7:0]
Name/Value	0/1	0x0e	BIST_FAIL	VDD_UVOV	DTFLT	SPIERR	CONFCRCERR	RTMON_ FLT	WDOG_FLT	COMERR	VREF_UV	VEE_OOR	—
Default	—	—	0	0	0	0	0	0	0	0	0	0	—

Table 55. STATUS2 register description

Bit	Logic 1 indicates:	Fault latched	PWMing disabled	IGBT turn OFF method
BIST_FAIL	BIST failure.	Yes	Yes, GL = 1, AMC = 1 if enabled	Normal
VDD_UVOV	VDD out of range.	Yes	Yes, GL = 1, AMC = 1 if enabled	Normal
DTFLT	PWM dead time violation.	Yes	No	—
SPIERR	SPI framing or CRC error.	Yes	No	—
CONFCRCERR	LV domain or HV domain detected a CRC change in its CONFIG registers.	Yes	Yes, GL = 1, AMC = 1 if enabled	Normal
RTMON_FLT	Only valid if RTMON_CFG=0. LV domain detected that VGE(RTMON_CFG = 0) is not tracking commanded state.	Yes	Yes, GL = 1, AMC = 1 if enabled	Normal
WDOG_FLT	LV domain or HV domain detects a loss of LV/HV domain communication.	Yes	Yes, GL = 1, AMC = 1 if enabled	Normal
COMERR	LV/HV domain communications CRC error or framing error.	Yes	Yes, GL = 1, AMC = 1 if enabled	Normal
VREF_UV	VREF out of range.	Yes	Yes, GL = 1, AMC = 1 if enabled	Normal
VEE_OOR	VEE out of range.	Yes	Yes, GL = 1, AMC = 1 if enabled	Normal

11.14.16 MSK2 register (ADDR = 0x0F)

The MSK2 register determines bit-for-bit the faults to be reported to INTB or INTA from the STATUS2 register. The GD3160 must be in CONFIG mode for the mask settings to be changed. Not all faults may be masked (such as BIST_FAIL and VDD_UVOV).

Table 56. MSK2 register bit readout

	Rb/W	ADDR [4:0]	DATA9	DATA8	DATA7	DATA6	DATA5	DATA4	DATA3	DATA2	DATA1	DATA0	CRC
Bit #	[23]	[22:18]	[17]	[16]	[15]	[14]	[13]	[12]	[11]	[10]	[9]	[8]	[7:0]
Name/Value	0/1	0x0F	—	—	DTFLTM	SPIERRM	CONFCR CERRM	RTMON_ FLTM	WDOG_ FLTM	COMERRM	—	VEE_ OORM	—
Write locked in normal mode	—	—	—	—	yes	yes	yes	yes	yes	yes	—	yes	—
Default	—	—	0	0	1	1	1	0	1	1	0	0	—

Table 57. MSK2 register description

Bit	Bit function	Logic 0	Logic 1
DTFLTM	dead time fault mask.	PWMing remains enabled, fault not latched or reported, programmed PWM dead time is enforced.	PWM enabled.
SPIERRM	SPI CRC or framing error fault mask.	PWMing remains enabled, fault not latched or reported.	PWM enabled.
CONFCRCERRM	LV or HV domain CONF register CRC error mask.	PWMing remains enabled, fault not latched or reported.	PWM disabled. GL = 1, AMC = 1 if enabled.

All information provided in this document is subject to legal disclaimers.

© 2026 NXP B.V. All rights reserved.

Table 57. MSK2 register description*...continued*

Bit	Bit function	Logic 0	Logic 1
RTMON_FLTM	RTMON error mask.	PWMing remains enabled, fault not latched or reported.	PWM disabled. GL = 1, AMC = 1 if enabled.
WDOG_FLTM [1]	Watchdog fault mask.	PWMing remains enabled, fault not latched or reported, periodic REQADC continues.	PWM disabled. GL = 1, AMC = 1 if enabled.
COMERRM	Internal communications fault mask.	PWMing remains enabled, fault not latched or reported.	PWM disabled. GL = 1, AMC = 1 if enabled.
VEE_OORM	VEE out of range fault mask.	PWMing remains enabled, fault not latched or reported.	PWM disabled. GL = 1, AMC = 1 if enabled.

[1] WDOG_FLT indicates LV domain received NO message in response to one of the periodic LV domain DATA messages. This bit should be used only for debug purposes. This bit defaults to "unmasked" at power up.

11.14.17 RMSK2 register (ADDR = 0x10)

The RMSK2 register values determine which interrupt pin (either INTB or INTA) an unmasked fault is to be reported. Not all STATUS2 faults can be reported at INTA (such as BIST_FAIL, VDD_UVOV, and so on.). A value of '0' reports the fault to INTB, and a value of '1' reports the fault to INTA. Recall that for INTA to be configured as a fault pin, the RTRPT bit must be set accordingly in the MODE2 register.

Table 58. RMSK2 register bit readout

	Rb/W	ADDR [4:0]	DATA9	DATA8	DATA7	DATA6	DATA5	DATA4	DATA3	DATA2	DATA1	DATA0	CRC
Bit #	[23]	[22:18]	[17]	[16]	[15]	[14]	[13]	[12]	[11]	[10]	[9]	[8]	[7:0]
Name/Value	0/1	0x10	—	—	DTFLTA	—	—	—	—	—	VREF_UVA	VEE_OORA	—
Write locked in normal mode	—	—	—	—	yes	—	—	—	—	—	yes	yes	—
Default	—	—	0	0	0	0	0	0	0	0	1	0	—

All information provided in this document is subject to legal disclaimers.

© 2026 NXP B.V. All rights reserved.

Table 59. RMSK2 register description

Bit	Bit function	Logic 0	Logic 1
DTFLTA	Select INTx pin to report DTFLT fault to	Report fault on INTB [1]	Report fault on INTA
VREF_UVA	Select INTx pin to report VREF_UV fault to	Report fault on INTB	Report fault on INTA [1]
VEE_OORA	Select INTx pin to report VEE_OOR fault to	Report fault on INTB [1]	Report fault on INTA

[1] Default value

11.14.18 STATUS3 register (ADDR = 0x11)

The STATUS3 pin reports critical GD3160 control and status pin states, after deglitch. The MCU can monitor pin state bits (i.e. PWM, PWMALT, FSSTATE, FSENB) to check circuit integrity. A change in the deglitched logic pin state is reflected in the corresponding bit within 1 µs. The POR recovery bits (POR_1, POR_2) will only read '1' following a POR event or after BIST operation; they will read '0' following a software reset command or after writing a '1' to these bits. If INTA is configured to report faults, the INTA and VRTMON may report different values.

Table 60. STATUS3 register

	Rb/W	ADDR [4:0]	DATA9	DATA8	DATA7	DATA6	DATA5	DATA4	DATA3	DATA2	DATA1	DATA0	CRC
Bit #	[23]	[22:18]	[17]	[16]	[15]	[14]	[13]	[12]	[11]	[10]	[9]	[8]	[7:0]
Name/Value	0/1	0x11	POR_1	POR_2	FSISO	PWM	PWMALT	FSSTATE	FSENB	INTB	INTA	VRTMON	—
Default	—	—	1	1	—	—	—	—	—	—	—	—	—

Table 61. STATUS3 register description

Bit	Bit function	Logic 0	Logic 1
POR_1	Report LV die recovery from POR	LV die POR recovery bit has been cleared	Notification of LV die recovery from POR
POR_2	Report HV die recovery from POR	HV die POR recovery bit has been cleared	Notification of HV die recovery from POR
FSISO	Report FSISO pin state	FSISO pin is logic low	FSISO pin is logic high
PWM	Report PWM pin state	PWM pin is logic low	PWM pin is logic high
PWMALT	Report PWMALT pin state	PWMALT pin is logic low	PWMALT pin is logic high
FSSTATE	Report FSSTATE pin state	FSSTATE pin is logic low	FSSTATE pin is logic high
FSENB	Report FSENB pin state	FSENB pin is logic low	FSENB pin is logic high
INTB	Report INTB pin state	INTB pin is logic low	INTB pin is logic high
INTA	Report INTA pin state	INTA pin is logic low	INTA pin is logic high
VRTMON	Report the state of the quantity under real-time monitoring/reporting (VGE) or reporting (VCE): • When RTMON_CFG= 0: VGE • When RTMON_CFG = 1: VCE [1] [2]	VGE: VGE is low (power device is OFF) VCE: VCE is high (power device is OFF)	VGE: VGE is high (power device is ON) VCE: VCE is low (power device is ON)

[1] By default, VRTMON reports the VGE state. This is due to the default RTMON_CFG = 0 in the MODE2 register.
[2] The RTMON_CFG bit in MODE2 determines the quantity to report to the VTRMON. This must be changed during CONFIG mode.

All information provided in this document is subject to legal disclaimers.

© 2026 NXP B.V. All rights reserved.

11.14.19 CONFIGAOUT register (ADDR = 0x12)

The CONFIGAOUT register determines the second quantity reported on AOUT, the magnitude of temperature-sense current, and sets the ADC offset and range for the AMUXIN and TSENSEA inputs. The CONFIGAOUT register is permanently unlocked; CONFIG mode is not required to modify the CONFIGAOUT register values. These values are configurable on-the-fly and may be changed according to system or application demands.

Table 62. CONFIGAOUT register bit readout

	Rb/W	ADDR [4:0]	DATA9	DATA8	DATA7	DATA6	DATA5	DATA4	DATA3	DATA2	DATA1	DATA0	CRC
Bit #	[23]	[22:18]	[17]	[16]	[15]	[14]	[13]	[12]	[11]	[10]	[9]	[8]	[7:0]
Name/Value	0/1	0x12	ITSNS[1]	ITSNS[0]	TOFST[1]	TOFST[0]	TRNG	AMUXINRNG	AMUXINOS[1]	AMUXINOS[0]	AOUT_ SEL [1]	AOUT_ SEL [0]	—
Write locked in normal mode	—	—	no	no	no	no	no	no	no	no	no	no	—
Default	—	—	1	1	0	0	0	0	0	0	0	0	—

Table 63. CONFIGAOUT bit description

Bits	Bit function
ITSNS[1:0]	TSENSEA current source magnitude. See Table 64 for values.
TOFST[1:0]	TSENSEA offset selection. See Table 64 for values.
TRNG	Select the full-scale range for TSENSEA ADC: • TRNG = 0: full-scale range = 5 V [1] • TRNG = 1: full-scale range = 1 V
AMUXRNG	Select the full-scale range for the AMUXIN ADC: • AMUXRNG = 0: full-scale range = 5 V [1] • AMUXRNG = 1: full-scale range = 1 V
AMUXINOS[1:0]	AMUXIN offset selection. See Table 64 for values.
AOUT_SEL[1:0]	Select the 2nd quantity reported to the AOUT pin. See Table 64 for selections.

[1] Default value

Table 64. CONFIGAOUT parametric ranges

Bit value [1:0]	ITSNS[1:0]	TOFST[1:0]	AMUXINOS[1]	AOUT_SEL[1:0]
0x00	0.25 mA	0.0 V[1]	0.0 V[1]	VCCREG
0x01	0.50 mA	0.5 V	0.5 V	AMUXIN
0x02	0.75 mA	1.0 V	1.0 V	VCC
0x03	1.00 mA[1]	1.5 V	1.5 V	VEE

[1] Default value

11.14.20 ADC request and response (ADDR = 0x13)

The REQADC command will convert the requested quantity and respond with the result over SPI. The REQADC request is delivered as a "read" command (leading MSB = 0), with the four LSBs indicating the quantity to be read, given in Table 66. A REQADC command/request delivered as a write (leading MSB = 1) is an invalid command and ignored. The REQADC response includes the identical address as the command (ADDR[4:0] = 0x13) followed by the 10-bit data.

All information provided in this document is subject to legal disclaimers.

© 2026 NXP B.V. All rights reserved.

Table 65. REQADC request and response bit readout

	Rb/W	ADDR [4:0]	DATA9	DATA8	DATA7	DATA6	DATA5	DATA4	DATA3	DATA2	DATA1	DATA0	CRC
Bit #	[23]	[22:18]	[17]	[16]	[15]	[14]	[13]	[12]	[11]	[10]	[9]	[8]	[7:0]
REQADC (request)	0	0x13	—	—	—	—	—	—	AMUX_ SEL [3]	AMUX_ SEL [2]	AMUX_ SEL [1]	AMUX_ SEL [0]	—
REQADC (response)	0	0x13	ADCVAL [9]	ADCVAL [8]	ADCVAL [7]	ADCVAL [6]	ADCVAL [5]	ADCVAL [4]	ADCVAL [3]	ADCVAL [2]	ADCVAL [1]	ADCVAL [0]	—

Table 66. REQADC request selections

AMUX_SEL[3:0]	AMUX selection reported in REQADC response	Other relevant settings
0x00	VCCREG	—
0x01	AMUXIN	• AMUXINOS[1:0] • AMUXINRNG
0x02	VCC	—
0x03	VEE	—
0x04	Power device temperature	• ITSNS[1:0] • TRNG • TOFST[1:0]
0x05	Die temperature (GH)	—
0x06 – 0x0F	Not used	—

See Section 11.12.2 for further information interpreting post-converted results.

11.14.21 BIST request and response (ADDR = 0x14)

The REQBIST command reads and reports the results of the latest built-in self-test (BIST) critical for safety-critical, high ASIL-level applications. After completing BIST, send a REQBIST command to elaborate on the result. A circuit passing BIST receives a REQBIST = 0 bit value, a failed circuit is indicated by a REQBIST = 1 bit value. Unlike the BIST itself, the REQBIST request does not need to be initiated while the GD3160 is in configuration mode. REQBIST bits persist until a new BIST is conducted or POR occurs. SPI is inactive while the BIST is running.

For other details on the BIST operation, see Section 11.16. For a recommended BIST procedure, see Section 12.2.

Table 67. REQBIST request and response bit readout

	Rb/W	ADDR [4:0]	DATA9	DATA8	DATA7	DATA6	DATA5	DATA4	DATA3	DATA2	DATA1	DATA0	CRC
Bit #	[23]	[22:18]	[17]	[16]	[15]	[14]	[13]	[12]	[11]	[10]	[9]	[8]	[7:0]
REQUEST BIST (command)	0	0x14	0	0	0	0	0	0	0	0	0	0	—
REQUEST BIST (response)	0	0x14	REQBIST [9]	REQBIST [8]	REQBIST [7]	REQBIST [6]	REQBIST [5]	REQBIST [4]	REQBIST [3]	REQBIST [2]	REQBIST [1]	REQBIST [0]	—

Table 68. REQBIST bit descriptions

Bit	Logic 1 indicates BIST failure in:
REQBIST[9]	DATA_IN, DATA_OUT communications link.
REQBIST[8]	LV domain LBIST, logic state machine, timers, or combinational logic.
REQBIST[7]	HV domain LBIST, logic state machine, timers, or combinational logic.
REQBIST[6]	Oscillator failure (LV or HV domain).
REQBIST[5]	DESAT and/or SEGDRV comparators.

All information provided in this document is subject to legal disclaimers.

© 2026 NXP B.V. All rights reserved.

Table 68. REQBIST bit descriptions*...continued*

Bit	Logic 1 indicates BIST failure in:
REQBIST[4]	ISENSE short-circuit, overcurrent comparators.
REQBIST[3]	LV or HV domain overtemperature protection.
REQBIST[2]	ADC failure (HV domain).
REQBIST[1]	LV domain power management, diagnostics, UV/OV monitors.
REQBIST[0]	HV domain power management, diagnostics, UV/OV monitors.

11.14.22 Device ID (ADDR = 0x15)

The ID registers provides revision and version information on the LV and HV domain die each.

Table 69. ID register bit readout

	Rb/W	ADDR [4:0]	DATA9	DATA8	DATA7	DATA6	DATA5	DATA4	DATA3	DATA2	DATA1	DATA0	CRC
Bit #	[23]	[22:18]	[17]	[16]	[15]	[14]	[13]	[12]	[11]	[10]	[9]	[8]	[7:0]
Name/Value	0	0x15	—	—	VDD3	LVDC[2]	LVDC[1]	LVDC[0]	FS3ST	HVDC[2]	HVDC[1]	HVDC[0]	—
Default	0	—	0	0	—	—	—	—	—	—	—	—	—

Table 70. ID bit description

Bits	Bit description
VDD3	VDD selection: VDD3 = 1 VDD = 5 V VDD3 = 0 VDD = 3 V
LVDC[2:0]	Low-voltage (LV) domain die revision number LVDC[2:0] = '100'
FS3ST	FSISO Tristate selection: FS3ST = 0 On state selected (default) FS3ST = 1 3-state selected
HVDC[2:0]	High-voltage (HV) domain die revision number HVDC[2:0] = '100'

11.15 Low-voltage domain to high-voltage domain communications

11.15.1 Introduction

The GD3160 integrates communications channels between the low-voltage (LV) domain connected to the MCU, and the high-voltage (HV) domain connected to the IGBT/SiC power device. These channels are mostly transparent to the user, but enable critical controls, configurability, as well as fault and status reporting.

All LV/HV domain communications are protected by 8-bit CRC (checked on both domains). These domain communications are initiated with regularity and supervised by a watchdog, again on both domains. This contributes to the ASIL level of the GD3160 and system.

11.15.2 Overview of low-voltage (LV) communications

The LV domain receives inputs from the MCU and originates communication messages to the HV domain. The LV domain also receives a real-time status from the HV domain and might react to it according to the GD3160's configuration.

The LV domain retrieves converted ADC data from the HV domain on a regular basis using the watchdog routine. The LV domain stores the most recently acquired data and provides this to the AOUT pin. If the user

All information provided in this document is subject to legal disclaimers.

© 2026 NXP B.V. All rights reserved.

requests the same data over a REQADC SPI command, a new LV/HV domain command is not initiated and the stored data is reported.

The GD3160 uses dynamic scheduling of watchdog and other LV/HV domain communications to try to avoid PWM edges (frequently the most electrically disruptive activity in the gate driver IC) and execute precision operations during idle PWM times. The GD3160 will attempt to schedule the next LV/HV communications during the longest idle time of the PWM cycle – or if the frequency is too fast, it prefers to schedule after PWM edges.

Table 71. Watchdog scheduling according to PWM

Duty cycle condition	Scheduling
d < 50 %	During PWM low
d > 50 %	During PWM high
Very fast frequency	After PWM high

The GD3160 will also manage interruptions to the LV/HV communications and retry message transmission after the PWM is idle. For example, if a PWM edge is received during a SPI command, the GD3160 will suspend internal LV/HV communications, throw out the command, and retry transmission. There is no internal error (COMERR) reported for this case.

No command is sent to the HV domain in the case of a SPI error (SPIERR) or invalid address request. Transitions in CSB that are not accompanied by SCLK activity do not result in an LV/HV message being sent, and no SPIERR or COMERR is reported.

11.15.3 Overview of high-voltage (HV) communications

The HV domain continuously relays real-time status of the HV domain and power device to the LV domain. Otherwise, the HV domain behaves as a communications responder, only replying to commands originating from the LV domain.

If the HV domain does not see a command from the LV domain within the watchdog timeout period, the HV domain will latch a fault, notify the LV domain, and latch off the gate outputs.

11.15.4 Managing LV/HV domain communication errors

There are several types of communications errors that can occur between the spi controller and the GD3160 or between the low-voltage and high-voltage domains on the GD3160. Table 72 lists the errors that can occur with each message type and how the GD3160 responds to each error.

Table 72. SPI and LV/HV domain communication error management

Message type	From	To	Error	Response
SPI command	MCU	LV domain	The low-voltage domain detects error or framing error	The low-voltage domain returns data from last valid command, ignores message, sets SPIERR bit in STATUS 2, latches fault and reports fault at INTB. IGBT state is not changed.
SPI command	LV domain	HV domain	The high-voltage domain detects CRC or framing error	The high-voltage domain returns data from last valid command and increments its COMERR counter. If count is exceeded: • Sets COMERR bit in STATUS 2 • Latches fault and reports fault at INTB • Turns off IGBT
SPI command	HV domain	LV domain	The low-voltage domain detects no response from the high-voltage domain	When the WD timer expires, the low-voltage domain latches a WDOG_FLT, reports the fault at INTB, sets WDOG_FLT bit in STATUS 2 and instructs the high-voltage domain to turn off IGBT
SPI command	HV domain	LV domain	The low-voltage domain detects CRC or framing error, or last valid data	The low-voltage domain returns data from last valid command and increments its COMERR counter. If count is exceeded: • Sets COMERR bit in STATUS 2 • Latches fault and reports fault at INTB • Turns off IGBT

All information provided in this document is subject to legal disclaimers.

© 2026 NXP B.V. All rights reserved.

Table 72. SPI and LV/HV domain communication error management*...continued*

Message type	From	To	Error	Response
SPI command	MCU	LV domain	SPI message delay time is too brief (< 19 µs)	The low-voltage domain returns data from last valid command and ignores message. Condition is reported as SPIERR
Low-voltage domain to high-voltage domain request ADC command	LV domain	HV domain	The high-voltage domain does not receive any message within the watchdog timeout interval	The high-voltage domain sets WDOG_FLT bit in its STATUS 2, latches fault, reports fault at INTB and turns off IGBT
Low-voltage domain to high-voltage domain request ADC command	LV domain	HV domain	The high-voltage domain detects CRC or framing error	The high-voltage domain returns data from last valid message and increments its error counter. If count is exceeded: • Sets COMERR bit in STATUS 2 • Latches fault and reports fault at INTB • Turns off IGBT
Low-voltage domain to high-voltage domain request ADC command	HV domain	LV domain	The low-voltage domain detects no response from the high-voltage domain	When the WD timer expires, the low-voltage domain latches a WDOG_FLT, reports the fault at INTB, sets WDOG_FLT bit in STATUS 2 and instructs the high-voltage domain to turn off IGBT
low-voltage domain to high-voltage domain request ADC command	HV domain	LV domain	The low-voltage domain detects CRC or framing error	The low-voltage domain ignores returned data and increments its error counter. If count is exceeded: • Sets COMERR bit in STATUS 2 • Latches fault and reports fault at INTB • Instructs the high-voltage domain to turn off IGBT

All information provided in this document is subject to legal disclaimers.

© 2026 NXP B.V. All rights reserved.

11.16 Built-in self-test

11.16.1 BIST overview

The GD3160's built-in self-test (BIST) is critical in helping meet its ASIL/SIL safety metrics. The BIST, including logic BIST/LBIST and analog BIST/ABIST, checks all key safety mechanisms and other circuits used in general operation:

- LV domain power management, diagnostics, UV/OV monitors (VSUP, VDD)
- HV domain power management, diagnostics, UV/OV monitors (VCC, VCCREG, VREF, VEE out of range)
- ISENSE short-circuit (SC) and overcurrent (OC) comparators
- LV and HV overtemperature comparators
- Clock loss/oscillator failure
- ADC conversion failure
- Desaturation fault and segmented drive comparators
- Logic block BIST, on both LV and HV domains
- LV/HV domain communications

The BIST process is described in Section 11.16.2. Figure 40 and Figure 41 show the INTB, INTA, and AOUT output pin states. One important note on configuring VEEM before running the BIST is given in Section 11.16.3.

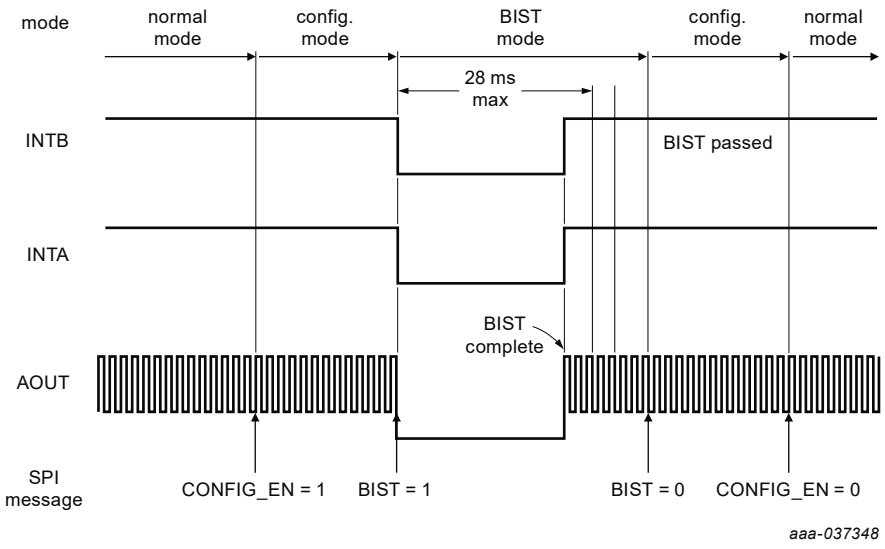

Figure 40. Successfully completed BIST sequence

The BIST result is reported on INTB when the BIST bit is set to '0' by a SPI command to exit BIST mode. If any portion of the low-voltage domain or high-voltage domain BIST sequence fails, the INTB pin behaves as shown in Figure 41. In this case, INTB is pulled low when the device enters Configuration mode, the BIST_FAIL bit in STATUS2 register is latched to Logic 1, the circuit that failed BIST is identified in the REQBIST register, and the IGBT gate drive output is forced to the OFF state. The BIST fault bit reported by the SPI is a logic OR of the BIST faults of both low-voltage domain and high-voltage domain.

All information provided in this document is subject to legal disclaimers.

© 2026 NXP B.V. All rights reserved.

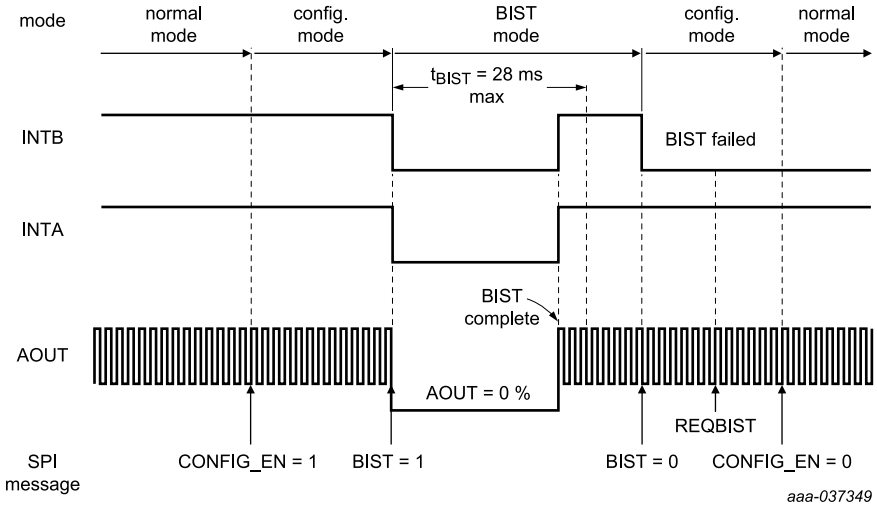

Figure 41. BIST sequence with failure

If the GD3160 fails the BIST test, it can be queried to determine the source of the failure. To accomplish this, the MCU sends a REQBIST command, whereupon it receives a response indicating which of 10 sub-circuits reported the failure.

Power cycling only one domain resets the logic and BIST result of that domain only; the other domain is preserved, and the ORed BIST result of the whole device (seen at the BIST_FAIL bit) is refreshed.

BIST relies on the VEE_OORM mask setting to determine whether it should test VEE monitoring circuitry or not. The GD3160 interprets a VEE_OORM = 0 as a system without a negative supply, and not check VEE monitor circuits. Setting VEE_OORM = 1 confirms a negative supply is expected, and VEE monitor circuits are checked.

BIST configuration and use are described in Section 12.

11.16.2 BIST process

The GD3160 can only enter BIST from Configuration mode (in MODE2 register, CONFIG_EN = 1). Any other BIST request initiated while the device is not in Configuration mode is ignored. BIST starts once a Logic 1 is written to the BIST bit in the MODE2 register, while the device was already in Configuration mode.

The GD3160 output pins INTB, INTA, and AOUT provide a way for the MCU to monitor BIST progress, as well as validate pin connections and ensure proper functionality of INTB, INTA, and AOUT features. Upon starting BIST, INTB, INTA are pulled low and, after a maximum delay of 250 µs, AOUT reports 0 % duty cycle (pulled low). During BIST, the gate is latched off and the PWM control is disabled (until BIST = 0 and the device is no longer in Configuration mode). Allow 28 ms for BIST completion.

Upon completion of the BIST tasks, INTB and INTA go to Logic 1 and AOUT returns a 10 % fixed duty cycle. The GD3160 remains in Configuration mode (CONFIG_EN = 1) and returns all configuration register contents to their default states. Refer to Section 11.14 for information on default register states. The BIST results are loaded to the REQBIST register, and results are ORed into the BIST_FAIL bit (STATUS2 register) bit. Upon exit of the BIST mode (set BIST = 0), the BIST_FAIL result is loaded to the INTB pin state.

The BIST results are stored in the REQBIST register after BIST completes (setting BIST = 0 is not required) and may be read anytime, until a POR occurs or BIST is run again. Cycling power on the LV die resets LV die logic, but not HV die or the ORed response of all BIST faults.

All information provided in this document is subject to legal disclaimers.

© 2026 NXP B.V. All rights reserved.

11.16.3 Configure VEE_OORM before running BIST

BIST uses the VEE_OORM mask setting, before BIST has started, to determine whether it should test VEE monitoring circuitry or not, as part of the BIST.

The GD3160 interprets a VEE_OORM = 0 as a system without a negative supply, and does not check VEE monitoring circuits during BIST. Setting VEE_OORM = 1 going into BIST indicates a negative supply will be present and causes the GD3160 to test VEE monitoring circuits.

For this reason, if the system includes a negative supply, it is recommended to set VEE_OORM = 1 before running BIST, even if VEE_OORM = 0 (the VEE out of range fault will be masked) during normal operation. BIST may cover this anyway. Configuring mask values before BIST is therefore part of the recommended BIST operation procedure given in Section 12.2.

All information provided in this document is subject to legal disclaimers.

© 2026 NXP B.V. All rights reserved.

12 Operation

Get the GD3160 up and running in an application using the steps given in this section:

1. Power up the GD3160 safely into a zero-fault state per Section 12.1.
2. Run BIST upon initialization per Section 12.2.
   - If BIST is run on power down, skip this step.
3. The GD3160 now may be safely used in the default configuration now, as detailed in Section 12.3.
4. Configure the GD3160 for an application using SPI and return to normal operation, according to Section 12.4.
5. Exceptions to normal operation are given by fault reactions described in Section 12.5.
6. Manage the system safe state with fail-safe controls and modes given to Section 12.6.

12.1 GD3160 power-up sequence

The following sequence can be used as a guideline for powering up the GD3160.

1. Bring up VSUP/VDD to power up the LV domain properly. Passive pullup/pulldown on input pins ensure a safe state.
2. Configure all MCU I/O connected to the GD3160.
   a. Set CSB, FSENB = Logic 1.
   b. Set MOSI, PWM, FSSTATE = Logic 0.
   c. Set MCU pins seeing GD3160's INTB, INTA, and AOUT pins to be inputs.
3. Confirm LV domain is working properly without faults, while HV domain is still unpowered.
   a. Verify the following to confirm GD3160 is in the right state (WAIT state) and working properly:
      i. INTB = Logic 0
      ii. AOUT duty cycle is d = 5 % (before HV domain is powered up)
      iii. AOUT period is 3.9 kHz ±3 % (verifies GD3160 internal clock)
   b. Read SPI registers to ensure no faults on LV domain:
      i. Check STATUS2 register to ensure VDD is properly powered up (no VDD_UVOV fault) and that there are no errors in SPI communication (no SPIERR fault).
      ii. Check for LV die OTSD_IC fault by reading STATUS1
      iii. A watchdog fault (WDOG_FLT) is acceptable at this point, since we have not powered the HV domain, the LV/HV domain communications will not yet work.
   c. Confirm correct pin states on LV domain I/O pins:
      - Read STATUS3 register to confirm PWM, PWMALT, FSENB, FSSTATE, and INTB pins are in the correct states.
4. Enable the DC-DC converter that powers the HV domain (VCC) to complete the power-up sequence, and clear/diagnose any faults upon completing power up.
   a. Enable the power supply supplying VCC, and wait for the supply/regulators to stabilize.
   b. Output pins indicate when HV domain is powered and working properly (GD3160 is in NORMAL mode):
      i. AOUT reports the voltage on TSENSEA, duty cycle is between 10 % and 90 % (no longer reporting 5 %).
      ii. INTB = Logic 1 indicates there are no faults present.
      iii. If INTB = 0 still at this step, there are faults to clear.
   c. Read SPI status registers to ensure no faults persist after full power up. INTB = 1 indicates there are no faults or all faults were cleared.
      i. Check STATUS2 register and clear any latched watchdog faults (WDOG_FLT) remaining from power up.

All information provided in this document is subject to legal disclaimers.

© 2026 NXP B.V. All rights reserved.

ii. Check STATUS1 register for any fault with incorrect gate supply (no VCCOV or VCCREGUV faults), load (no DESAT, etc.) or temperature element (no OTSD or OTW faults) and clear as needed. A VCCOV or VCCUVREG may be triggered if the desired value has not been set previously.
iii. A REQADC command of the TSENSEA should confirm the reading seen on AOUT.

d. Confirm correct expected states on HV domain connections:
   - Read STATUS3 register to ensure FSISO and power device gate (VGE) are in the expected state.

The GD3160 is now ready for BIST, configuration, or operation with default settings.

12.2 Perform BIST upon initialization

Upon initial configuration, perform a BIST with the relevant GD3160 settings configured.

1. If not already done, enter Configuration mode by writing a '1' to the CONFIG_EN bit in the MODE2 register.
2. Configure protections for BIST to check.
   a. If operating in a system with a negative gate voltage, set the VEE_OORM mask bit (in MSK2 register) to 1 so that BIST checks the comparator monitoring for VEE out of range (OOR) Failure mode. Even if VEE_OORM will be masked in the application, this is one setting the BIST looks at to determine what to check. The VEE_OORM mask bit can be set later to any value.
   b. If operating a system without a negative gate voltage (minimum gate-emitter voltage = 0 V), VEE_OORM may be left at 0, the default value.
3. Write a 1 to the BIST bit in the MODE2 register. This initializes the BIST process. See Section 11.16 for additional information.
4. Following BIST completion, write BIST = 0 to end the BIST mode and deliver the result to the INTB pin.
   - For block-level elaboration on the BIST result, send a REQBIST command and view the response. See Section 11.16 for additional information.
5. Because PWM is disabled by configuration mode (CONFIG_EN = 1), after passing BIST the MCU can verify the system path to various pins, if not already done.
   a. Verify paths to input pins PWM, PWMALT, FSSTATE, FSENB, and FSISO pins by toggling the state from the MCU and reading pin state (as seen by the GD3160) back over STATUS3 register.
   b. The INTA and INTB output states can also be verified by STATUS3, the MCU can compare its own pin state to the state reported by the GD3160 STATUS3 bit state. This can be done during a BIST fail or pass state.
6. Write desired fault mask settings back to all mask registers (MSK1, MSK2, RMSK1, RMSK2) per application settings. This enables desired fault and protections reporting now that BIST has been completed with as many circuits as desired active.
7. At this point, BIST and verification measures are complete. There are two ways to proceed:
   a. Write CONFIG_EN = 0 to leave CONFIG mode and enable PWMing with default settings. Continue to Section 12.3.
   b. Leave CONFIG_EN = 1 for now to continue configuring the device. Bearing the default configuration in mind, skip to Section 12.5 for configure the GD3160 best for an application.
8. Clear bits POR_1 and POR_2 in STATUS 3 register.

All information provided in this document is subject to legal disclaimers.

© 2026 NXP B.V. All rights reserved.

12.3 Default functionality

The GD3160 takes default functionality settings upon initial power up, POR recovery, software reset command by SPI (RESET bit), or after completing the BIST sequence. The default settings are optimal for SiC MOSFETs or very fast IGBTs. Default functionality is given below, along with the associated bit setting.

12.3.1 Default configuration

Without additional configuration via the SPI, GD3160 will take the following functionality by default.

- PWM activity on the gate is not disabled or restricted once power supplies are in full regulation and LV/HV domain supplies are working. CONFIG = BIST = RESET = 0.
- The VCCREG gate supply regulator is enabled (VCC level and hardware connections permitting) and initializes at 15 V. VCCREG[2:0] = 0b001.
- INTA is configured as a second fault pin and real-time report is disabled. RTRPT = RTMON_CFG = 0.
  - INTA and INTB will report faults per the RMSK1 and RMSK2 registers.
- The mandatory PWM dead time is initialized to 3.24 µs (includes div. by 2 factor by TIME_2 = 1). DEADT = 0b1111, TIME_2 = 1.
- AMC is enabled and will hold the gate low after turn-off is complete. AMC = 1.
- TSENSEA current source is enabled. TISNS_EN = 1.
  - The value TSENSEA current source is 1 mA. ITSNS = 0b11.
  - Power device overtemperature fault and warning are masked by default, so the device will not initialize into a faulted state. OTSDM = OTWM = 0.
- AOUT reports the voltage at the TSENSEA pin. AOUT = 0.
- The FSISO pin is enabled and can turn on the gate. FSISOEN = 1.
- Upon gate supply (VCCREG) undervoltage recovery, PWM activity is allowed. UV_LATCH = 0.
  - The VCCREG undervoltage threshold is 11.5 V. UV_TH[2:0] = 0b011.
- The real-time monitor delay (RTMONDLY) is configured for 1000 ns time (includes div. by 2 factor for TIME_2). RTMONDLY = 0b1010, TIME_2 = 1.

12.3.2 Default protections

The enabled protections have the following settings, by default:

- DESAT protection (interface with power device collector/drain) is enabled. DESAT = 1.
  - The internal DESAT pin current source is 500 µA. IDESAT[1:0] = 0b01.
  - The DESAT threshold voltage is 6.0 V. DESAT_TH = 0b1010.
  - The DESAT detection filter time is 80 ns. DESAT_FLT[1:0] = 0b01.
  - The DESAT leading edge blanking time is 240 ns. DESAT_LEB[2:0] = 0b011.
- 2LTO is enabled and will engage the gate while verifying a fault. 2LTO = 1.
  - The 2LTO voltage is 7.26 V. 2LTOV = 0b011.
  - The duration of 2LTO is 500 ns (includes default faster behavior by SCFF bit). SCFILT = 0b100, SCFF = 1.
- SSD is enabled and will engage during a faulted shutdown. SSD = 1.
  - The SSD current is 0.541 A. SSD_CUR = 0b100.
  - The default SSD time is 3000 ns (including div. by 2 factor from the default TIME_2 setting). SSDT = 0b100, TIME_2 = 1.
- dead time fault protection is not masked and will be reported by default. DTFLTM = 1.
- The SPI message error (SPIERR) will be reported by default. SPIERRM = 1.
  - If the GD3160 SPI response is not updating, and INTB goes low upon sending a SPI message, this could indicate a SPIERR fault occurred due to problems with the SPI message.

All information provided in this document is subject to legal disclaimers.

© 2026 NXP B.V. All rights reserved.

- The watchdog fault will be reported, indicating when LV/HV domain communications are not occurring. WDOG_FLTM = 1.
- Internal domain communications errors and unintended configuration register flips will be reported. CONFCRCERRM = COMERRM = 1.
- A VREF undervoltage condition will be reported and latch off gate outputs.

12.3.3 Default mask settings

The following functions are disabled or masked by default and will not be reported:

- ISENSE protection (interface with a current mirror) is disabled.
  - Short-circuit detection by the ISENSE pin is disabled. SCSNS = 0.
  - Overcurrent sense by the ISENSE pin is disabled. OCSNS = 0.
- Segmented drive mode is disabled. SEGDRV = 0.
- Active VCE clamp is disabled. ACTCLMP = 0.
- VEE supply out of range is masked and not reported. VEE_OORM = 0.
- Power device overtemperature/warning reporting is masked by default and not reported. OTSDM = OTWM = 0.
- PWM-to-gate-output coherency check is masked by default, and will not be reported. RTMON_FLTM = 0.

12.4 Register initialization in CONFIG mode

To configure the GD3160 operating modes and reporting scheme, first place the device into configuration mode by a SPI message.

1. Write a '1' to the CONFIG_EN bit in the MODE2 register. No other register will retain written data until this is done. Entering Configuration mode also disables PWMing and prevents unwanted bit flips.
2. Read back the MODE2 register and confirm CONFIG_EN bit = 1 before writing the remaining registers. If CONFIG_EN is not set to '1' or INTB is low, the SPI communication is invalid.
3. When CONFIG_EN = 1, the GD3160 is in Configuration mode and all MODE, CONFIG registers, and interrupt MSK and RMSK registers can be written to. The registers do not need to be read back in order for the bit settings to be retained. The bits are finalized upon rising edge of CSB.

12.5 Summary of faults and GD3160 responses

Table 73 lists the GD3160's faults bits, the mode, and mask bits associated with each fault, and the response to the fault based on the state of the mode and mask bits.

All faults are reported at the INTB or INTA and the SPI unless the fault is masked. If the fault is no longer present, latched fault bits can be cleared by POR, Reset, BIST, or by writing a Logic 1 to the faulted SPI bit.

Table 73. GD3160 fault response and mask settings

Fault bit description (Symbol)	Mode bit and function		Mask bit and functional response				Power device faulted turnoff	
	Mode bit	Function (When Mode bit = 1)	Mask bit	Response when masked (Mask bit = 0)	Unmasked response (Mask bit = 1) with fault present	Unmasked response (Mask bit = 1) after fault is no longer present	SSD (if enabled)	TLTO (if enabled)
VCC overvoltage (VCCOV)	—	—	VCCOVM	PWMing remains enabled, fault not latched or reported.	PWM disabled. GL on. AMC on, if enabled.	PWM disabled. GL on. AMC on, if enabled.	No	No
VCCREG undervoltage (VCCREGUV)	—	—	VCCREGUVM	PWMing remains enabled, fault not latched or reported.	PWM gated by UV comparator if UV_ LATCH = 0. GL on. AMC on, if enabled.	PWM disabled if UV_ LATCH bit = 1 (in CONFIG1)	No	No
VSUP overvoltage (VSUPOV)	—	—	VSUPOVM	PWMing remains enabled, fault not latched or reported.	PWM disabled. GL on. AMC on, if enabled.	PWM disabled. GL on. AMC on, if enabled.	No	No

All information provided in this document is subject to legal disclaimers.

© 2026 NXP B.V. All rights reserved.

Table 73. GD3160 fault response and mask settings*...continued*

Fault bit description (Symbol)	Mode bit and function		Mask bit and functional response				Power device faulted turnoff	
	Mode bit	Function (When Mode bit = 1)	Mask bit	Response when masked (Mask bit = 0)	Unmasked response (Mask bit = 1) with fault present	Unmasked response (Mask bit = 1) after fault is no longer present	SSD (if enabled)	TLTO (if enabled)
VDD regulator overtemperature shutdown (OTSD_IC)	—	—	—	Not maskable.	PWM disabled. GL on. AMC on, if enabled. VDD remains ON.	PWM disabled. GL on. AMC on, if enabled. VDD remains ON.	No	No
VCCREG regulator and GH transistor overtemperature shutdown (OTSD_IC)	—	—	—	Not maskable.	PWM disabled. VCCREG and GH = off GL on. AMC on, if enabled. VREF = off.	PWM disabled. VCCREG and GH = off GL on. AMC on, if enabled. VREF = off.	No	No
GL transistor overtemperature shutdown (OTSD_IC)	—	—	—	Not maskable.	PWM disabled. VCCREG and GH = off GL on. AMC on, if enabled. VREF = off.	PWM disabled. VCCREG and GH = off GL on. AMC on, if enabled. VREF = off.	No	No
Overtemperature shutdown of IGBT (OTSD)	—	—	OTSDM	PWMing remains enabled, fault not latched or reported. Temp reported in ADCVAL and AOUT.	PWM disabled. GL on. AMC on, if enabled.	PWM disabled. GL on. AMC on, if enabled.	No	No
Overtemperature warning of IGBT (OTW)	—	—	OTWM	PWMing remains enabled, fault not latched or reported. Temp reported in ADCVAL.	PWM enabled.	PWM enabled.	NA	NA
V_{CE} clamp activation (CLAMP)	ACTCLMP	Enables clamp comparator, protection, fault reporting.	CLAMPM	PWMing remains enabled, fault not latched or reported.	PWM disabled. SSD is engaged for the intervention time.	PWM enabled.	Yes, min SSD (100 mA)	NA
Power device desaturation, by DESAT detection (DESAT)	DESAT	Enables DESAT comparator, current sources, protection, fault reporting.	—	Not maskable.	PWM disabled. GL on. AMC on, if enabled.	PWM disabled. GL on. AMC on, if enabled.	Yes	Yes
Power device short-circuit, by current-sense (SC)	SCSNS	Enables SC comparator, protection, fault reporting.	—	Not maskable.	PWM disabled. GL on. AMC on, if enabled.	PWM disabled. GL on. AMC on, if enabled.	Yes	Yes
Power device overcurrent, by current-sense (OC)	OCSNS	Enables OC comparator, protection, fault reporting.	OCM	PWM remains enabled, fault not latched or reported.	PWM enabled.	PWM enabled.	Yes, max SSD (1 A)	No
BIST failure (BIST_FAIL)	BIST	Enables BIST sequence.	—	Not maskable.	PWM disabled. GL on. AMC on, if enabled.	PWM disabled. GL on. AMC on, if enabled.	NA	NA
VDD out of range (VDD_UVOV)	—	—	—	Not maskable.	PWM disabled. GL on. AMC on, if enabled.	PWM disabled. GL on. AMC on, if enabled.	No	No
PWM dead time violation (DTFLT)	—	—	DTFLTM	PWMing remains enabled, fault not latched or reported, programmed dead time remains enforced.	PWM enabled additional dead time inserted via settings, INTA or INTB is reported.	PWM enabled, INTB remains latched.	NA	NA
SPI framing or CRC error (SPIERR)	—	—	SPIERRM	PWMing remains enabled, fault not latched or reported.	PWM enabled.	PWM enabled.	NA	NA
LV or HV domain detected a use reading issue or a CRC change in its CONFIG registers (CONFCRCERR)	—	—	CONFCR CERRM	PWMing remains enabled, fault not latched or reported.	PWM disabled. GL on. AMC on, if enabled.	PWM disabled. GL on. AMC on, if enabled.	No	No
Gate not tracking PWM commanded state (RTMON_FLT)	—	—	RTMON_FLTM	PWMing remains enabled, fault not latched or reported.	PWM disabled. GL on. AMC on, if enabled.	PWM disabled. GL on. AMC on, if enabled.	No	No
Loss of LV/HV domain communication (WDOG_FLT)	—	—	WDOG_FLTM	PWMing remains enabled, fault not latched or reported.	PWM disabled. GL on. AMC on, if enabled.	PWM disabled. GL on. AMC on, if enabled.	No	No
Error in HV/LV domain communications (COMERR)	—	—	COMERRM	PWMing remains enabled, fault not latched or reported.	PWM disabled. GL on. AMC on, if enabled.	PWM disabled. GL on. AMC on, if enabled.	No	No

All information provided in this document is subject to legal disclaimers.

© 2026 NXP B.V. All rights reserved.

Table 73. GD3160 fault response and mask settings*...continued*

Fault bit description (Symbol)	Mode bit and function		Mask bit and functional response				Power device faulted turnoff	
	Mode bit	Function (When Mode bit = 1)	Mask bit	Response when masked (Mask bit = 0)	Unmasked response (Mask bit = 1) with fault present	Unmasked response (Mask bit = 1) after fault is no longer present	SSD (if enabled)	TLTO (if enabled)
VREF out of range (VREF_UV)	—	—	—	Not maskable.	PWM disabled. GL on. AMC on, if enabled.	PWM disabled. GL on. AMC on, if enabled.	No	No
VEE out of range (VEE_OOR)	—	—	VEE_OORM	PWMing remains enabled, fault not latched or reported.	PWM disabled. GL on. AMC on, if enabled.	PWM disabled. GL on. AMC on, if enabled.	No	No

12.6 Fail-safe transitions

Upon realization of a fault, the system must move into a Safe state. The exact architecture and implementation varies by design but the GD3160 clearly implements fail-safe and fault responses per Table 74.

Table 74. GD3160 control priority: Normal, Fault, and Fail-safe modes

Priority	Signal[1]	Origin	Type[2]	Maskable[3]
1	FSISO	Die 2 (HV)	Pin	N
2	OSC_LOSS/WD_FLT	Die 2 (HV)	Fault	Y
3	RESET	SPI	Register	N
4	BIST	SPI	Register	N
5	VCCOV	Die 2 (HV)	Fault	Y
5	VCCREGUV	Die 2 (HV)	Gated (UV_LATCH)	Y
5	VCCREGUV	Die 2 (HV)	Fault	Y
5	OTSD_IC	Die 2 (HV)	Fault	N
5	OTSD	Die 2 (HV)	Fault	Y
5	BIST fault	Die 2 (HV)	Fault	N
5	CONFCRCERR	Die 2 (HV)	Fault	Y
5	WD_FLT	Die 2 (HV)	Fault	Y
5	COMERR	Die 2 (HV)	Fault	Y
5	VREF_UV	Die 2 (HV)	Fault	N
5	VEE_OOR	Die 2 (HV)	Fault	Y
6	DESAT	Die 2 (HV)	Fault	N
6	SC	Die 2 (HV)	Fault	N
7	SEG_DRV	Die 2 (HV)	SD Mod	N
8	CLAMP	Die 2 (HV)	Fault (not masked)	Y
8	CLAMP	Die 2 (HV)	SD Mod (masked)	Y
9	OC	Die 2 (HV)	SD Mod/Warn (not masked)	Y
9	OC	Die 2 (HV)	SD Mod (masked)	Y
10	FSENB/FSSATE	SPI	Register	N
11	CONFIG_EN	Die 1 (LV)	Pin	N
12	VSUPOV	Die 1 (LV)	Fault	Y
12	OTSD_IC	Die 1 (LV)	Fault	N
12	VDD_UV	Die 1 (LV)	Fault (VDD_UVOV)	N
12	VDD_OV	Die 1 (LV)	Fault (VDD_UVOV)	N
12	RTMON_FLT	Die 1 (LV)	Fault	Y
12	BIST fault	Die 1 (LV)	Fault	N
12	CONFCRCERR	Die 1 (LV)	Fault	Y
12	WD_FLT	Die 1 (LV)	Fault	Y

All information provided in this document is subject to legal disclaimers.

© 2026 NXP B.V. All rights reserved.

Table 74. GD3160 control priority: Normal, Fault, and Fail-safe modes*...continued*

Priority	Signal[1]	Origin	Type[2]	Maskable[3]
12	COMERR	Die 1 (LV)	Fault	Y
13	DTFLT/DEADT	Die 1 (LV)	TO PWM Mod/Warn (not masked)	Y
13	DTFLT/DEADT	Die 1 (LV)	TO PWM Mod (masked)	Y
14	PWM	Die 1 (LV)	Pin	N
NA	OTW	Die 2 (HV)	Warn	Y
NA	POR_2	Die 2 (HV)	Warn	N
NA	POR_1	Die 1 (LV)	Warn	N
NA	SPIERR	Die 1 (LV)	Warn	Y

[1] Signals are repeated when Origin or configuration changes the type.
[2] Types are:
- Pin = An external voltage level input
- Register = A SPI register mode bit
- Fault = A detected and latched fault resulting in Gate OFF
- Gated = A fault response that is not latched and only holds the Gate OFF during the Fault condition
- Mod = A Gate transition modifier:
  - SD: Shutdown
  - TO PWM: Turn-ON PWM
- Warn = A latched-status response that does not change Gate operation; cleared same as a Fault

[3] Maskable signals are not latched and action is not taken when masked, unless the signals show a type change.

The GD3160 fault response and action taken (on the gate) varies between Normal and Fail-safe modes. Fail-safe can be used following a fault to place the gate into a Safe state while the fault is addressed, before the fault is cleared.

Table 75 details fail-safe response following various faults on the GD3160. The fault/fail-safe response is identical whether the fault occurred before fail-safe, or whether the Fail-safe state preceded the fault.

Table 75. GD3160 fault priority and responses

Reported fault Fault description	Fault latched	Gate follows PWM/ PWMALT following fault? (Normal mode)	Gate follows FSSTATE following fault? (Fail-safe mode)	Gate follows FSISO following fault? (Fail-safe mode)	Notes/Rationale
		PWM/PWMALT = X FSENB = 1 FSISO = 0	PWM/PWMALT = X FSENB = 0 FSISO = 0	PWM/PWMALT = X FSENB = X FSISO = 1	
STATUS1 register					
VCCOV VCC overvoltage	Yes	No	No	Yes	Control by PWM and FSSTATE is disabled during gate-facing HV domain fault.
VCCREGUV VCCREG undervoltage	Per UV_ LATCH setting	No	No	Yes	Control by PWM and FSSTATE is disabled during the VCCREG undervoltage condition. Response upon VCCREG UV recovery is determined by UV_LATCH configuration bit.
VSUPOV VSUP overvoltage	Yes	No	Yes	Yes	VSUP overvoltage is an LV domain fault, which does not impact fail-safe functionality.
OTSD_IC Overtemperature shutdown on GD3160 LV or HV domain	Yes	No	No	Yes	IC overtemperature disables PWM and FSSTATE control. The safe state is gate latched off.
OTSD Overtemperature shutdown on IGBT	Yes	No	No	Yes	Power device overtemperature disables PWM and FSSTATE control to prevent overheating. Safe state is gate latched off.
OTW IGBT overtemperature warning	Yes	Yes	Yes	Yes	OTW has no impact on gate control.
CLAMP VCE overvoltage fault, clamp activated	Per CLAMPM setting	No	No	Yes	VCE overvoltage clamp disables PWM and FSSTATE, and safely shuts down and latches the gate off.
DESAT Desaturation fault	Yes	No	No	Yes	A desaturation fault disables PWM and FSSTATE, and safely shutdowns and latches off the gate.

All information provided in this document is subject to legal disclaimers.

© 2026 NXP B.V. All rights reserved.

Table 75. GD3160 fault priority and responses*...continued*

Reported fault Fault description	Fault latched	Gate follows PWM/ PWMALT following fault? (Normal mode)	Gate follows FSSTATE following fault? (Fail-safe mode)	Gate follows FSISO following fault? (Fail-safe mode)	Notes/Rationale
		PWM/PWMALT = X FSENB = 1 FSISO = 0	PWM/PWMALT = X FSENB = 0 FSISO = 0	PWM/PWMALT = X FSENB = X FSISO = 1	
SC Short-circuit fault	Yes	No	No	Yes	A short-circuit fault disables PWM and FSSTATE, and safely shuts down and latches off the gate.
OC Overcurrent fault	Per OCM setting	Yes	Yes	Yes	SSD utilized upon OC fault under PWM and FSSTATE transitions. OC and SSD are not active under FSISO.
STATUS2 register					
BIST_FAIL BIST failure on LV domain (facing MCU)	Yes	No	Yes	Yes	If the LV domain fails BIST, the gate follows FSSTATE in Fail-safe mode. All BIST failures on both LV/HV domains are ORed and reported to one BIST_FAIL bit.
BIST_FAIL BIST failure on HV domain (facing gate)	Yes	No	No	Yes	If the HV domain fails BIST, gate control by FSSTATE is disabled. All BIST failures on both LV/HV domains are ORed and reported to one BIST_FAIL bit.
VDD_UVOV VDD out of range	Yes	No	Yes	Yes	If VDD UV/OV is temporary and recovers, then no fault is latched.
DTFLT dead time violation in PWM command	Yes	Yes	Yes	Yes	A dead time fault will result in delayed turn-on by PWM, but does not disable normal PWM control. dead time protection is unavailable while in Fail-safe modes. Functional dead time must be provided by the safety logic providing FSSTATE.
SPIERR SPI communication, framing, or CRC error	Yes	Yes	Yes	Yes	SPIERR has no effect on gate control, and does not disable control by PWM or FSSTATE.
CONFCRCERR CONFIG register CRC value mismatch or bit flip on LV domain (facing MCU)	Yes	No	Yes	Yes	A CONFCRCERR fault on the LV domain will not disable gate control by FSSTATE in Fail-safe mode. All LV or HV domain CONFCRCERR faults are ORed to the CONFCRCERR fault bit.
CONFCRCERR CONFIG register CRC value mismatch or bit flip on HV domain (facing gate)	Yes	No	No	Yes	A CONFCRCERR fault on the HV domain will disable gate control by FSSTATE. All LV or HV domain CONFCRCERR faults are ORed to the CONFCRCERR fault bit.
RTMON_FLT Power device not tracking PWM command	Yes	No	Yes	Yes	Real-time power device monitoring fault does not disable control by FSSTATE in Fail-safe mode.
WDOG_FLT Loss of watchdog communication, seen by LV domain (HV domain does not respond).	Yes	No	Yes	Yes	If LV die latches WDOG_FLT (HV die does not respond), FSSTATE is not disabled during Fail-safe mode. If WDOG_ FLT is due to unpowered HV domain, the gate is automatically held off. Normal PWM is always disabled by WDOG_FLT.
WDOG_FLT Loss of watchdog communication, seen by HV domain (LV domain does not respond).	Yes	No	No	Yes	If HV die latches fault (LV domain does not respond), FSSTATE is disabled. If LV domain is unpowered, there is no transmission of PWM or FSSTATE commands to the HV domain. Normal PWM is always disabled by WDOG_FLT.
COMERR Inter-domain communications error (CRC, framing, and so on.)	Yes	No	No	Yes	COMERR fault latches gate off safely and disables all gate commands from the LV domain.
VREF_UV VREF undervoltage	Yes	No	No	Yes	VREF undervoltage fault disables control by PWM and FSSTATE, but not FSISO. During VREF undervoltage, the ADC, OC, DESAT, VCC overvoltage fault, and VCE real-time monitor are disabled, and the WD_FLT is set. While the ADC is disabled, the OT_TH and OTW_TH cannot be tripped.
VEE_OOR VEE negative gate supply out of range	Yes	No	No	Yes	Loss of negative gate supply disables control by PWM and FSSTATE.

All information provided in this document is subject to legal disclaimers.

© 2026 NXP B.V. All rights reserved.

13 Packaging

13.1 Package mechanical dimensions

Package dimensions are provided in package drawings. To find the most current package outline drawing, go to www.nxp.com and perform a keyword search for the drawing's document number.

Table 76. Package outline

Package	Suffix	Package outline drawing number
32-pin wide body SOIC	EK	98ARH99137A

All information provided in this document is subject to legal disclaimers.

© 2026 NXP B.V. All rights reserved.

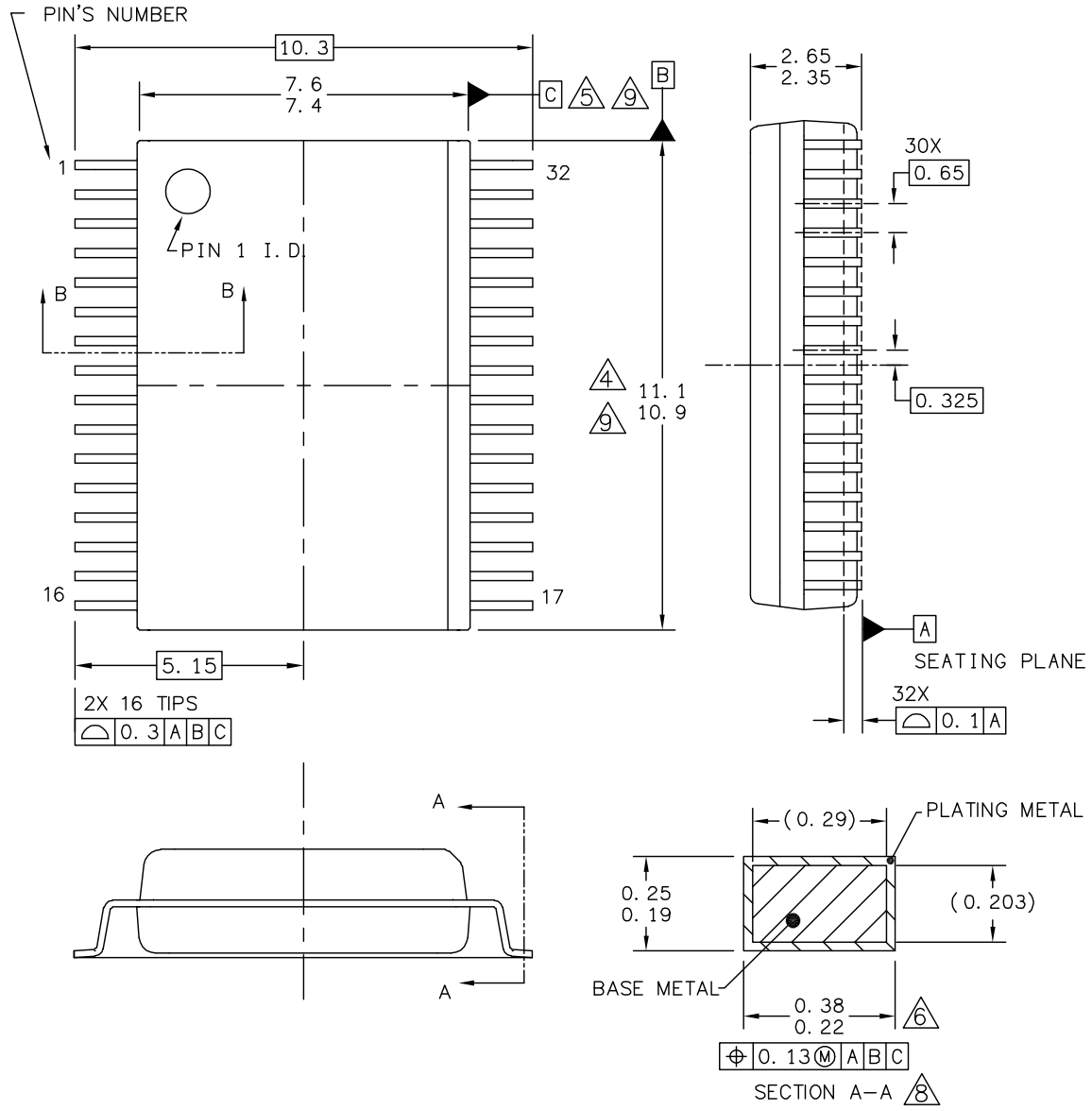

© NXP SEMICONDUCTORS N. V. ALL RIGHTS RESERVED	MECHANICAL OUTLINE	PRINT VERSION NOT TO SCALE
TITLE: 32LD SOIC W/B, 0.65 PITCH CASE OUTLINE	DOCUMENT NO: 98ARH99137A	REV: C
	STANDARD: NON–JEDEC	
	SOT1762–1	29 FEB 2016

All information provided in this document is subject to legal disclaimers.

© 2026 NXP B.V. All rights reserved.

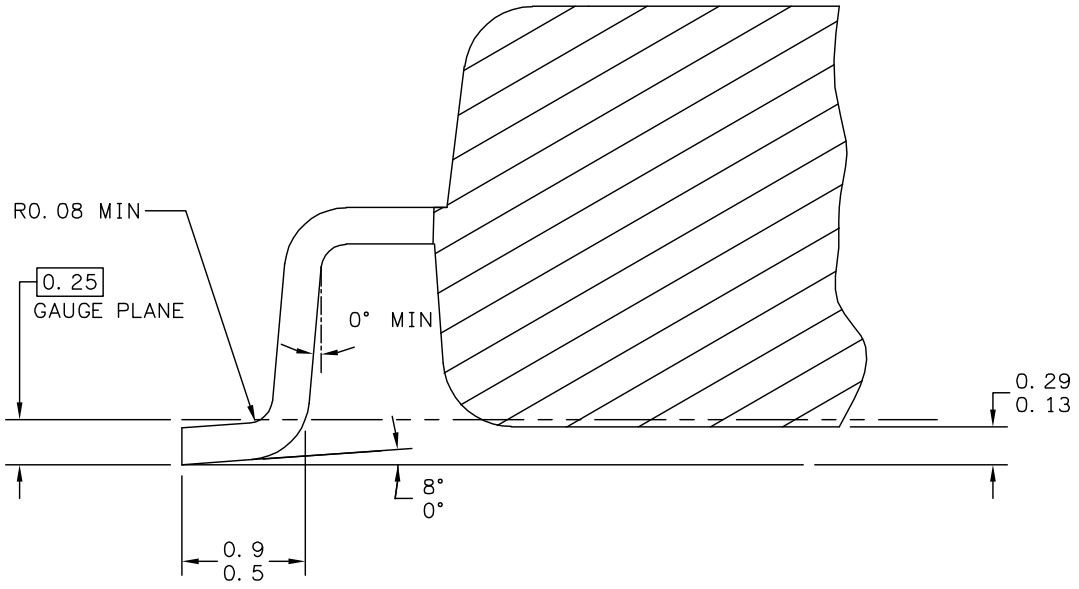

SECTION B–B

© NXP SEMICONDUCTORS N.V. ALL RIGHTS RESERVED	MECHANICAL OUTLINE	PRINT VERSION NOT TO SCALE
TITLE: 32LD SOIC W/B, 0.65 PITCH CASE OUTLINE	DOCUMENT NO: 98ARH99137A	REV: C
	STANDARD: NON-JEDEC	
	SOT1762-1	29 FEB 2016

All information provided in this document is subject to legal disclaimers.

© 2026 NXP B.V. All rights reserved.

NOTES:

1. DIMENSIONS ARE IN MILLIMETERS.
2. DIMENSIONING AND TOLERANCING PER ASME Y14.5M–1994.
3. DATUMS B AND C TO BE DETERMINED AT THE PLANE WHERE THE BOTTOM OF THE LEADS EXIT THE PLASTIC BODY.
4. THIS DIMENSION DOES NOT INCLUDE MOLD FLASH, PROTRUSION OR GATE BURRS. MOLD FLASH, PROTRUSION OR GATE BURRS SHALL NOT EXCEED 0.15 MM PER SIDE. THIS DIMENSION IS DETERMINED AT THE PLANE WHERE THE BOTTOM OF THE LEADS EXIT THE PLASTIC BODY.
5. THIS DIMENSION DOES NOT INCLUDE INTER–LEAD FLASH OR PROTRUSIONS. INTER–LEAD FLASH AND PROTRUSIONS SHALL NOT EXCEED 0.25 MM PER SIDE. THIS DIMENSION IS DETERMINED AT THE PLANE WHERE THE BOTTOM OF THE LEADS EXIT THE PLASTIC BODY.
6. THIS DIMENSION DOES NOT INCLUDE DAMBAR PROTRUSION. ALLOWABLE DAMBAR PROTRUSION SHALL NOT CAUSE THE LEAD WIDTH TO EXCEED 0.4 mm. DAMBAR CANNOT BE LOCATED ON THE LOWER RADIUS OR THE FOOT. MINIMUM SPACE BETWEEN PROTRUSION AND ADJACENT LEAD SHALL NOT LESS THAN 0.07 mm.
7. EXACT SHAPE OF EACH CORNER IS OPTIONAL.
8. THESE DIMENSIONS APPLY TO THE FLAT SECTION OF THE LEAD BETWEEN 0.10 mm AND 0.3 mm FROM THE LEAD TIP.
9. THE PACKAGE TOP MAY BE SMALLER THAN THE PACKAGE BOTTOM. THIS DIMENSION IS DETERMINED AT THE OUTERMOST EXTREMES OF THE PLASTIC BODY EXCLUSIVE OF MOLD FLASH, TIE BAR BURRS, GATE BURRS AND INTER–LEAD FLASH, BUT INCLUDING ANY MISMATCH BETWEEN THE TOP AND BOTTOM OF THE PLASTIC BODY.

© NXP SEMICONDUCTORS N. V. ALL RIGHTS RESERVED	MECHANICAL OUTLINE	PRINT VERSION NOT TO SCALE
TITLE: 32LD SOIC W/B, 0.65 PITCH, CASE OUTLINE	DOCUMENT NO: 98ARH99137A	REV: C
	STANDARD: NON–JEDEC	
	SOT1762–1	29 FEB 2016

All information provided in this document is subject to legal disclaimers.

© 2026 NXP B.V. All rights reserved.

14 Revision history

Table 77. Revision history

Document ID	Release date	Description
GD3160 v.16.0	31 August 2026	• Product data sheet • CIN 202506004IU02 • Table 4 -table updated, under "Gate drive output stage" • Table 20 -table updated • Section 11.3.3.4 -modified second paragraph • Section 11.11.2 - modified last paragraph,, added new para starting The GLx..... temperature measurement. • Section 12.1 - modified steps.
GD3160 v.15.0	14 July 2025	• Product data sheet • CIN 202506004I • Updated title of Section 8. • Table 16: Updated Min, Typ, and Max values of I_{DESAT_OFF} from "45", "70", and "90" to "140", "—", and "—", respectively. • Section 11.2.3.1: Added new text beginning with "Any FSSTATE logic level change ..." before Figure 13. • Section 11.6.2: Deleted sentence beginning "The active V_{CE} clamp ..." • Added the table titles, which now appear in Tables section: CONFIG2 parameter ranges, RMSK1 register description, RMSK2 register description, and Watchdog scheduling according to PWM • Section 11.16.2: Added "… , after a maximum delay of 250 µs, ... " • Table 51: Changed Bit "CLAMPM" Logic 0 = masked to "PWMing remains enabled, clamp active, fault not latched or reported." • Table 70: For Bit "LVDC[2:0]" and "HVDC[2:0]", changed "LVDC[2:0] = '011' " and "HVDC[2:0] = '011' " to "LVDC[2:0] = '100' " and "HVDC[2:0] = '100' ", respectively.
GD3160 v.14.0	10 December 2024	• Product • CIN 202411029I • Table 10 : Added footnote for Symbol "$VSUP_{UV_TH_L}$" • Table 14: Added footnote to Parameter for Symbol "$RDSON_{GH}$", "$RDSON_{GL}$", and "$RDSON_{AMC}$". • Table 20: Added rows for "C_{TENSEA}" and "$I_{TSENSEA_LK}$" • Section 11.1.5 – Changed "Once VSUP exceeds $VSUP_{UV_TH}$, the VDD regulator is enabled." to "Once VSUP exceeds 4.5V (for MGD3160AM3xxEK, VDD option = 3.3 V) or $VSUP_{UV_TH}$ (for MGD3160AM5xxEK, VDD option = 5 V), the VDD regulator is enabled." – Updated title of Figure 6. – Changed "When VSUP voltage falls below VSUPUV_TH at power down, the VDD regulator is disabled." to "When VSUP voltage falls below VDD_{UV_TH} (for MGD3160AM3xxEK, VDD option = 3.3 V) or $VSUP_{UV_TH}$ (for MGD3160AM5xxEK, VDD option = 5 V) at power down, the VDD regulator is disabled."

All information provided in this document is subject to legal disclaimers.

© 2026 NXP B.V. All rights reserved.

Table 77. Revision history...*continued*

Document ID	Release date	Description
		• Section 11.1.8: Changed "less negative" to "higher" in paragraph before Figure 10. • Section 11.13.1: Added last bullet item under "SPI protocol:". • Table 73: Changed SSD (if enabled) and TLTO (if enabled) from "N/A" to "No" for Fault bit description (Symbol) "VSUP overvoltage (VSUPOV)".
GD3160 v.13.0	06 May 2024	• Product • CIN 202404008I • Global editing for style and grammar throughout. • Updated Section 14 to conform with NXP's document content standard. • Table 8: Changed "V_{IOWM}" Value to "1060" and Unit to "V_{RMS}" • Section 9.5: Updated Min and Max values for "I_{DESAT}" and "V_{DESAT_TH}" • Section 9.7: Updated Min and Max values for "T_{OSET}" • Table 20: Updated "V_{OS}" Min and Max values • Section 10.1: Removed "is monitored and" from list item 3. • Section 11.1.6: Changed text of third paragraph from "… DESAT, VCC_OV faults and VCE RTMON ..." to "… DESAT, and VCC_OV faults ...". • Section 11.7.3: Changed "(e.g. during SPI or if CSB is kept low, etc.)" to "(for example, during SPI)." • Section 11.9.3: Changed "… delay of t_{fltdly} ..." to "… delay of t_{RTRPT_DLY}… ". • Table 51: Removed "Fault will be latched as VCCREGUV fault in STATUS1 register and reported on INTA or INTB." under "Logic 0 = masked" from Bit "VCCREGUVM". • Updated Figure 30 and Figure 40
GD3160 v.12.0	16 November 2023	• Product • CIN 202311012I
GD3160 v.11.0	21 April 2023	• Product • CIN 202302043I
GD3160 v.10.0	27 February 2023	• Product • CIN 202302043I
GD3160 v.9.0	21 November 2022	• Product • CIN 202209020I
GD3160 v.8.0	14 March 2022	• Product • CIN 202203016I
GD3160 v.7.0	23 November 2021	Product
GD3160 v.6.1	05 November 2021	Objective
GD3160 v.6.0	11 August 2021	Objective
GD3160 v.5.0	22 June 2021	Objective
GD3160 v.4.0	14 April 2021	Objective
GD3160 v.3.0	12 February 2021	Objective
GD3160 v.2.0	02 September 2020	Objective
GD3160 v.1.0	01 July 2020	Preliminary

All information provided in this document is subject to legal disclaimers.

© 2026 NXP B.V. All rights reserved.

Legal information

Data sheet status

Document status[1][2]	Product status[3]	Definition
Objective [short] data sheet	Development	This document contains data from the objective specification for product development.
Preliminary [short] data sheet	Qualification	This document contains data from the preliminary specification.
Product [short] data sheet	Production	This document contains the product specification.

[1] Please consult the most recently issued document before initiating or completing a design.
[2] The term 'short data sheet' is explained in section "Definitions".
[3] The product status of device(s) described in this document may have changed since this document was published and may differ in case of multiple devices. The latest product status information is available on the Internet at URL https://www.nxp.com.

Definitions

Draft — A draft status on a document indicates that the content is still under internal review and subject to formal approval, which may result in modifications or additions. NXP Semiconductors does not give any representations or warranties as to the accuracy or completeness of information included in a draft version of a document and shall have no liability for the consequences of use of such information.

Short data sheet — A short data sheet is an extract from a full data sheet with the same product type number(s) and title. A short data sheet is intended for quick reference only and should not be relied upon to contain detailed and full information. For detailed and full information see the relevant full data sheet, which is available on request via the local NXP Semiconductors sales office. In case of any inconsistency or conflict with the short data sheet, the full data sheet shall prevail.

Product specification — The information and data provided in a Product data sheet shall define the specification of the product as agreed between NXP Semiconductors and its customer, unless NXP Semiconductors and customer have explicitly agreed otherwise in writing. In no event however, shall an agreement be valid in which the NXP Semiconductors product is deemed to offer functions and qualities beyond those described in the Product data sheet.

Disclaimers

Limited warranty and liability — Information in this document is believed to be accurate and reliable. However, NXP Semiconductors does not give any representations or warranties, expressed or implied, as to the accuracy or completeness of such information and shall have no liability for the consequences of use of such information. NXP Semiconductors takes no responsibility for the content in this document if provided by an information source outside of NXP Semiconductors.

In no event shall NXP Semiconductors be liable for any indirect, incidental, punitive, special or consequential damages (including - without limitation - lost profits, lost savings, business interruption, costs related to the removal or replacement of any products or rework charges) whether or not such damages are based on tort (including negligence), warranty, breach of contract or any other legal theory.

Notwithstanding any damages that customer might incur for any reason whatsoever, NXP Semiconductors' aggregate and cumulative liability towards customer for the products described herein shall be limited in accordance with the Terms and conditions of commercial sale of NXP Semiconductors.

Right to make changes — NXP Semiconductors reserves the right to make changes to information published in this document, including without limitation specifications and product descriptions, at any time and without notice. This document supersedes and replaces all information supplied prior to the publication hereof.

Applications — Applications that are described herein for any of these products are for illustrative purposes only. NXP Semiconductors makes no representation or warranty that such applications will be suitable for the specified use without further testing or modification.

Customers are responsible for the design and operation of their applications and products using NXP Semiconductors products, and NXP Semiconductors accepts no liability for any assistance with applications or customer product design. It is customer's sole responsibility to determine whether the NXP Semiconductors product is suitable and fit for the customer's applications and products planned, as well as for the planned application and use of customer's third party customer(s). Customers should provide appropriate design and operating safeguards to minimize the risks associated with their applications and products.

NXP Semiconductors does not accept any liability related to any default, damage, costs or problem which is based on any weakness or default in the customer's applications or products, or the application or use by customer's third party customer(s). Customer is responsible for doing all necessary testing for the customer's applications and products using NXP Semiconductors products in order to avoid a default of the applications and the products or of the application or use by customer's third party customer(s). NXP does not accept any liability in this respect.

Limiting values — Stress above one or more limiting values (as defined in the Absolute Maximum Ratings System of IEC 60134) will cause permanent damage to the device. Limiting values are stress ratings only and (proper) operation of the device at these or any other conditions above those given in the Recommended operating conditions section (if present) or the Characteristics sections of this document is not warranted. Constant or repeated exposure to limiting values will permanently and irreversibly affect the quality and reliability of the device.

Terms and conditions of commercial sale — NXP Semiconductors products are sold subject to the general terms and conditions of commercial sale, as published at https://www.nxp.com/profile/terms, unless otherwise agreed in a valid written individual agreement. In case an individual agreement is concluded only the terms and conditions of the respective agreement shall apply. NXP Semiconductors hereby expressly objects to applying the customer's general terms and conditions with regard to the purchase of NXP Semiconductors products by customer.

No offer to sell or license — Nothing in this document may be interpreted or construed as an offer to sell products that is open for acceptance or the grant, conveyance or implication of any license under any copyrights, patents or other industrial or intellectual property rights.

All information provided in this document is subject to legal disclaimers.

© 2026 NXP B.V. All rights reserved.

Suitability for use in automotive applications — This NXP product has been qualified for use in automotive applications. If this product is used by customer in the development of, or for incorporation into, products or services (a) used in safety critical applications or (b) in which failure could lead to death, personal injury, or severe physical or environmental damage (such products and services hereinafter referred to as “Critical Applications”), then customer makes the ultimate design decisions regarding its products and is solely responsible for compliance with all legal, regulatory, safety, and security related requirements concerning its products, regardless of any information or support that may be provided by NXP. As such, customer assumes all risk related to use of any products in Critical Applications and NXP and its suppliers shall not be liable for any such use by customer. Accordingly, customer will indemnify and hold NXP harmless from any claims, liabilities, damages and associated costs and expenses (including attorneys’ fees) that NXP may incur related to customer’s incorporation of any product in a Critical Application.

Quick reference data — The Quick reference data is an extract of the product data given in the Limiting values and Characteristics sections of this document, and as such is not complete, exhaustive or legally binding.

Export control — This document as well as the item(s) described herein may be subject to export control regulations. Export might require a prior authorization from competent authorities.

HTML publications — An HTML version, if available, of this document is provided as a courtesy. Definitive information is contained in the applicable document in PDF format. If there is a discrepancy between the HTML document and the PDF document, the PDF document has priority.

Translations — A non-English (translated) version of a document, including the legal information in that document, is for reference only. The English version shall prevail in case of any discrepancy between the translated and English versions.

Security — Customer understands that all NXP products may be subject to unidentified vulnerabilities or may support established security standards or specifications with known limitations. Customer is responsible for the design and operation of its applications and products throughout their lifecycles to reduce the effect of these vulnerabilities on customer’s applications and products. Customer’s responsibility also extends to other open and/or proprietary technologies supported by NXP products for use in customer’s applications. NXP accepts no liability for any vulnerability. Customer should regularly check security updates from NXP and follow up appropriately.

Customer shall select products with security features that best meet rules, regulations, and standards of the intended application and make the ultimate design decisions regarding its products and is solely responsible for compliance with all legal, regulatory, and security related requirements concerning its products, regardless of any information or support that may be provided by NXP.

NXP has a Product Security Incident Response Team (PSIRT) (reachable at PSIRT@nxp.com) that manages the investigation, reporting, and solution release to security vulnerabilities of NXP products.

NXP B.V. — NXP B.V. is not an operating company and it does not distribute or sell products.

Trademarks

Notice: All referenced brands, product names, service names, and trademarks are the property of their respective owners.

NXP — wordmark and logo are trademarks of NXP B.V.

All information provided in this document is subject to legal disclaimers.

© 2026 NXP B.V. All rights reserved.

Tables

Tab. 1. Orderable part variations 5
Tab. 2. Pin definitions 7
Tab. 3. Range of functionality 9
Tab. 4. Absolute maximum ratings 9
Tab. 5. Thermal ratings 11
Tab. 6. Thermal resistance characteristics 11
Tab. 7. Insulation specifications 12
Tab. 8. DIN V VDE 0884-10 (VDE V 0884-10) insulation characteristics 12
Tab. 9. Regulatory information 13
Tab. 10. Power management electrical characteristics 14
Tab. 11. Low-voltage digital I/O electrical characteristics 16
Tab. 12. SPI timing 17
Tab. 13. FSISO pin electrical characteristics 18
Tab. 14. Gate drive output stage electrical characteristics 18
Tab. 15. Short-circuit and overcurrent fault electrical characteristics 21
Tab. 16. Desaturation fault management 23
Tab. 17. Active VCE clamping electrical characteristics 24
Tab. 18. Power device overtemperature electrical characteristics 25
Tab. 19. IC overtemperature electrical characteristics 25
Tab. 20. AMUX and ADC electrical characteristics 26
Tab. 21. LV/HV domain communications 27
Tab. 22. Power supplies and their functions 31
Tab. 23. Recommended external capacitors 32
Tab. 24. INTA configuration options 63
Tab. 25. SPI registers 74
Tab. 26. MODE1 register bit readout 74
Tab. 27. MODE1 register description 75
Tab. 28. Mode2 register bit readout 75
Tab. 29. Mode2 register description 75
Tab. 30. CONFIG1 register bit readout 76
Tab. 31. CONFIG1 bit description 76
Tab. 32. CONFIG1 parameter ranges 76
Tab. 33. CONFIG2 register bit readout 77
Tab. 34. CONFIG2 parameter ranges 77
Tab. 35. CONFIG3 register bit readout 78
Tab. 36. CONFIG3 bit descriptions 78
Tab. 37. CONFIG3 parameter ranges 78
Tab. 38. CONFIG4 register bit readout 79
Tab. 39. CONFIG4 parameter ranges 79
Tab. 40. CONFIG5 register 79
Tab. 41. CONFIG5 parameter ranges 79
Tab. 42. CONFIG6 register bit readout 80
Tab. 43. CONFIG6 parameter ranges 80
Tab. 44. CONFIG7 register bit readout 81
Tab. 45. CONFIG7 parameter ranges 81
Tab. 46. OT_TH register bit readout 82
Tab. 47. OTW_TH (IGBT overtemperature warning threshold register) 82
Tab. 48. STATUS1 register bit readout 83
Tab. 49. STATUS1 register description 83
Tab. 50. MSK1 register bit readout 83
Tab. 51. MSK1 register description 83
Tab. 52. RMSK1 register bit readout 84
Tab. 53. RMSK1 register description 84
Tab. 54. STATUS2 register bit readout 85
Tab. 55. STATUS2 register description 85
Tab. 56. MSK2 register bit readout 85
Tab. 57. MSK2 register description 85
Tab. 58. RMSK2 register bit readout 86
Tab. 59. RMSK2 register description 87
Tab. 60. STATUS3 register 87
Tab. 61. STATUS3 register description 87
Tab. 62. CONFIGAOUT register bit readout 88
Tab. 63. CONFIGAOUT bit description 88
Tab. 64. CONFIGAOUT parametric ranges 88
Tab. 65. REQADC request and response bit readout 89
Tab. 66. REQADC request selections 89
Tab. 67. REQBIST request and response bit readout 89
Tab. 68. REQBIST bit descriptions 89
Tab. 69. ID register bit readout 90
Tab. 70. ID bit description 90
Tab. 71. Watchdog scheduling according to PWM 91
Tab. 72. SPI and LV/HV domain communication error management 91
Tab. 73. GD3160 fault response and mask settings 99
Tab. 74. GD3160 control priority: Normal, Fault, and Fail-safe modes 101
Tab. 75. GD3160 fault priority and responses 102
Tab. 76. Package outline 104
Tab. 77. Revision history 108

All information provided in this document is subject to legal disclaimers.

© 2026 NXP B.V. All rights reserved.

Figures

Fig. 1. Simplified application diagram 3
Fig. 2. Internal block diagram 6
Fig. 3. Pinout diagram 7
Fig. 4. Main domain operating modes 30
Fig. 5. Definitions of over and undervoltage hysteresis 33
Fig. 6. Power supply sequencing at power up, low-voltage domain (5 V option) 34
Fig. 7. Power supply sequencing at power down, low-voltage domain 35
Fig. 8. Power supply sequencing at power-up, high-voltage domain 36
Fig. 9. Power supply sequencing at power-down, high-voltage domain 37
Fig. 10. HV domain power supplies, regulation, and monitoring 38
Fig. 11. Control and status reporting I/O 40
Fig. 12. FSENB and FSSTATE filtering when entering a Fail-safe state 42
Fig. 13. FSENB and FSSTATE filtering when exiting a fail-safe state 43
Fig. 14. PWM and PWMALT with dead time enforcement 44
Fig. 15. Gate drive output stage block diagram 45
Fig. 16. Active Miller clamp operation 47
Fig. 17. Short-circuit and overcurrent detection block diagram 49
Fig. 18. Short-circuit fault timing (2LTO = 1, SSD = 1) 50
Fig. 19. Overcurrent fault timing (OCM = 0, SSD = 1) 51
Fig. 20. Desaturation fault detection block 52
Fig. 21. DESAT fault timing (2LTO = 0, SSD = 1), RTMON_CFG = 1 53
Fig. 22. DESAT fault timing (2LTO = 1, SSD = 1), RTMON_CFG = 1 54
Fig. 23. DESAT fault timing (2LTO = 1, SSD = 1), RTMON_CFG = 0 55
Fig. 24. VCE active clamping timing 57
Fig. 25. Segmented drive detection circuitry 58
Fig. 26. Segmented drive timing 59
Fig. 27. AOUT % duty cycle vs. ADC value 61
Fig. 28. AOUT signal with interleaved pattern 61
Fig. 29. Low voltage domain monitoring of IGBT's VGE, RTMON_CFG = 0 (Vge state monitored at the AMC pin) 62
Fig. 30. INTA as a real-time VCE reporter 64
Fig. 31. INTA as a real-time VGE reporter 65
Fig. 32. Overtemperature monitoring circuitry 66
Fig. 33. GD3160 overtemperature block diagram 67
Fig. 34. AMUX and ADC block diagram 68
Fig. 35. SPI timing 70
Fig. 36. Single-device SPI message breakdown 71
Fig. 37. CRC Polynomial 71
Fig. 38. Daisy chain connection 73
Fig. 39. Daisy chain data transmission 73
Fig. 40. Successfully completed BIST sequence 93
Fig. 41. BIST sequence with failure 94

All information provided in this document is subject to legal disclaimers.

© 2026 NXP B.V. All rights reserved.

Contents

1 General description 1
2 Features and benefits 2
2.1 Key features 2
2.2 Safety features 2
2.3 Safety and regulatory approvals 2
3 Simplified application diagram 3
4 Applications 4
5 Ordering information 5
6 Internal block diagram 6
7 Pinning information 7
7.1 Pinning 7
7.2 Pin description 7
8 Limiting values 9
8.1 Range of functionality 9
8.2 Absolute maximum ratings 9
8.3 Thermal characteristics 11
8.4 Isolation and safety related specifications 12
9 Electrical characteristics 14
9.1 Power management 14
9.2 Digital inputs and outputs 15
9.3 Gate drive outputs 18
9.4 Current sense protection 21
9.5 Desaturation protection 23
9.6 VCE overvoltage protection 24
9.7 Power device overtemperature 25
9.8 IC overtemperature 25
9.9 AMUX and ADC electrical characteristics 26
9.10 LV/HV domain communications 27
10 Functional description 28
10.1 Device overview 28
10.2 State diagram 30
10.2.1 Main domain state diagram 30
11 Functional block operation 31
11.1 Power management 31
11.1.1 Introduction 31
11.1.2 Power sources and regulators 31
11.1.3 Recommended external capacitance 32
11.1.4 OV and UV threshold description 33
11.1.5 Power supply sequencing of the low-voltage domain 33
11.1.6 Power supply sequencing of the high-voltage domain 35
11.1.7 Fault management at power up 37
11.1.8 High-voltage domain supplies and monitors 38
11.2 Digital I/Os for control and configuration 39
11.2.1 Introduction 39
11.2.2 Functional block diagram 39
11.2.3 Safing logic pins 41
11.2.3.1 FSENB and FSSTATE pins 41
11.2.3.2 FSISO pin - Gate ON (MGD3160AM515EK, MGD3160AM518EK, MGD3160AM315EK, or MGD3160AM318EK) 43
11.2.3.3 FSISO pin - Gate 3-state (MGD3160AM535EK, MGD3160AM538EK, MGD3160AM335EK, or MGD3160AM338EK) 43
11.2.4 SPI pins (CSB, SCLK, MOSI, MISO) 44
11.2.5 PWM and PWMALT pins 44
11.3 Gate drive output stage and diagnostics 45
11.3.1 Introduction 45
11.3.2 Functional block diagram 45
11.3.3 Types of gate drive 46
11.3.3.1 Normal mode turn on and turn off 46
11.3.3.2 Soft shutdown 46
11.3.3.3 Two-level turn-off 46
11.3.3.4 Active Miller clamp and holdoff 47
11.4 Current sense protection 48
11.4.1 Introduction 48
11.4.2 Short-circuit fault management via the ISENSE pin 48
11.4.3 Overcurrent fault management with the ISENSE pin 50
11.5 Desaturation fault protection 51
11.5.1 Introduction 51
11.5.2 Features 51
11.5.3 Protection and diagnostic features 52
11.6 VCE overvoltage protection 55
11.6.1 Introduction 55
11.6.2 VCE advanced active clamp 56
11.6.3 Segmented drive operation 58
11.7 Fault status and analog reporting 60
11.7.1 Introduction 60
11.7.2 INTB pin 60
11.7.3 AOUT pin 61
11.8 VGE real-time monitoring (RTMON) 62
11.9 INTA fault reporting and real-time reporting 63
11.9.1 INTA overview 63
11.9.2 INTA fault reporting 63
11.9.3 INTA real-time VCE reporting 63
11.9.4 INTA real-time VGE reporting 64
11.10 Power device overtemperature detection circuitry 65
11.10.1 Introduction 65
11.10.2 Features 65
11.11 Overtemperature detection of the GD3160 66
11.11.1 Introduction 66
11.11.2 Features 67
11.12 AMUX and analog-to-digital converter 68
11.12.1 Introduction 68
11.12.2 AMUX and ADC features 68
11.13 24-bit serial peripheral interface 69
11.13.1 Introduction 69
11.13.2 SPI CRC 71
11.13.3 Protection of register configuration 71
11.13.4 Clearing fault bits 72
11.13.5 Daisy chain operation 72
11.14 SPI registers 74
11.14.1 MODE1 register (ADDR = 0x00) 74
11.14.2 MODE2 register (ADDR = 0x01) 75
11.14.3 CONFIG1 register (ADDR = 0x02) 76
11.14.4 CONFIG2 register (ADDR = 0x03) 77
11.14.5 CONFIG3 register (ADDR = 0x04) 78

All information provided in this document is subject to legal disclaimers.

© 2026 NXP B.V. All rights reserved.

11.14.6 CONFIG4 register (ADDR = 0x05) 78
11.14.7 CONFIG5 register (ADDR = 0x06) 79
11.14.8 CONFIG6 register (ADDR = 0x07) 80
11.14.9 CONFIG7 register (ADDR = 0x08) 81
11.14.10 OT_TH register (ADDR = 0x09) 82
11.14.11 OTW_TH register (ADDR = 0x0A) 82
11.14.12 STATUS1 register (ADDR = 0x0B) 82
11.14.13 MSK1 register (ADDR = 0x0C) 83
11.14.14 RMSK1 register (ADDR = 0x0D) 84
11.14.15 STATUS2 register (ADDR = 0x0E) 84
11.14.16 MSK2 register (ADDR = 0x0F) 85
11.14.17 RMSK2 register (ADDR = 0x10) 86
11.14.18 STATUS3 register (ADDR = 0x11) 87
11.14.19 CONFIGAOUT register (ADDR = 0x12) 88
11.14.20 ADC request and response (ADDR = 0x13) 88
11.14.21 BIST request and response (ADDR = 0x14) 89
11.14.22 Device ID (ADDR = 0x15) 90
11.15 Low-voltage domain to high-voltage domain communications 90
11.15.1 Introduction 90
11.15.2 Overview of low-voltage (LV) communications 90
11.15.3 Overview of high-voltage (HV) communications 91
11.15.4 Managing LV/HV domain communication errors 91
11.16 Built-in self-test 93
11.16.1 BIST overview 93
11.16.2 BIST process 94
11.16.3 Configure VEE_OORM before running BIST 95
12 Operation 96
12.1 GD3160 power-up sequence 96
12.2 Perform BIST upon initialization 97
12.3 Default functionality 98
12.3.1 Default configuration 98
12.3.2 Default protections 98
12.3.3 Default mask settings 99
12.4 Register initialization in CONFIG mode 99
12.5 Summary of faults and GD3160 responses 99
12.6 Fail-safe transitions 101
13 Packaging 104
13.1 Package mechanical dimensions 104
14 Revision history 108
Legal information 110

Please be aware that important notices concerning this document and the product(s) described herein, have been included in section 'Legal information'.

© 2026 NXP B.V. **All rights reserved.**