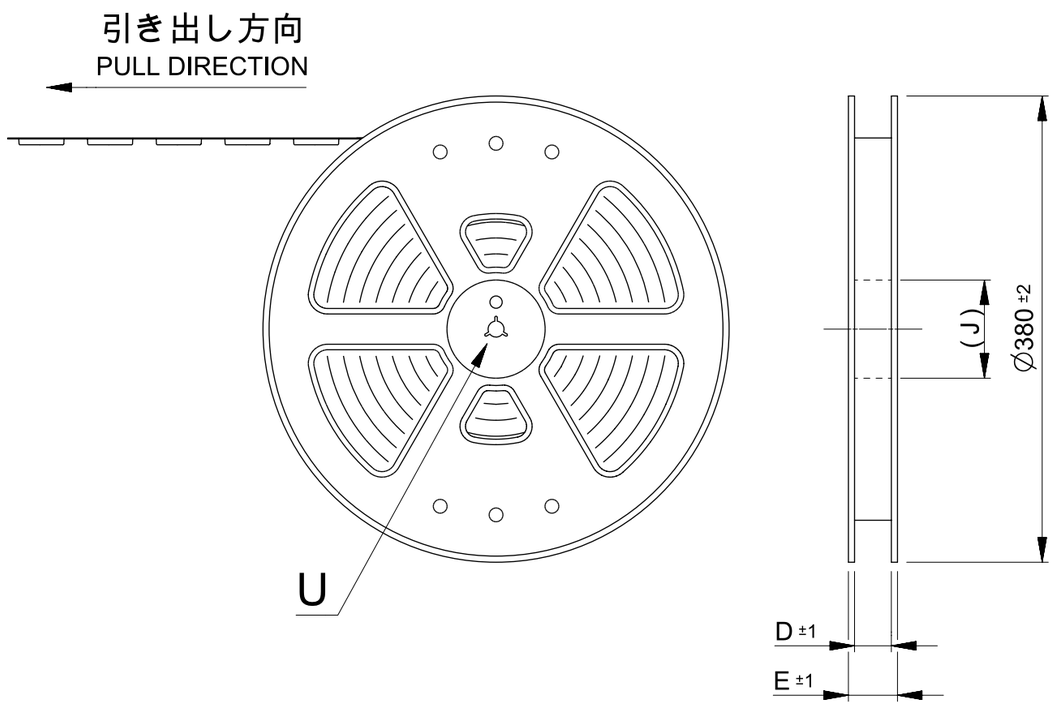

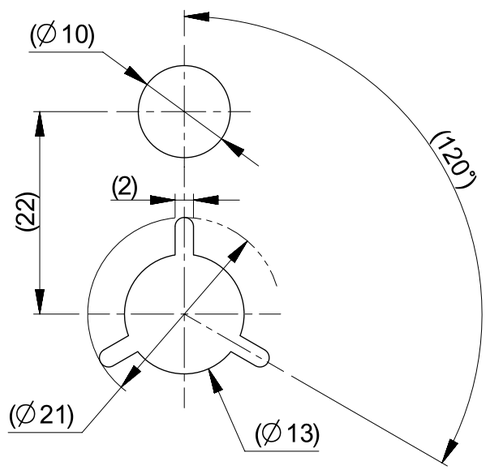

DETAIL U

NOTES

1. 梱包数量： 2000個／リール
   NUMBER OF CONNECTORS : 2000PCS/REEL

2. リードテープ長さ
   LEAD TAPE LENGTH

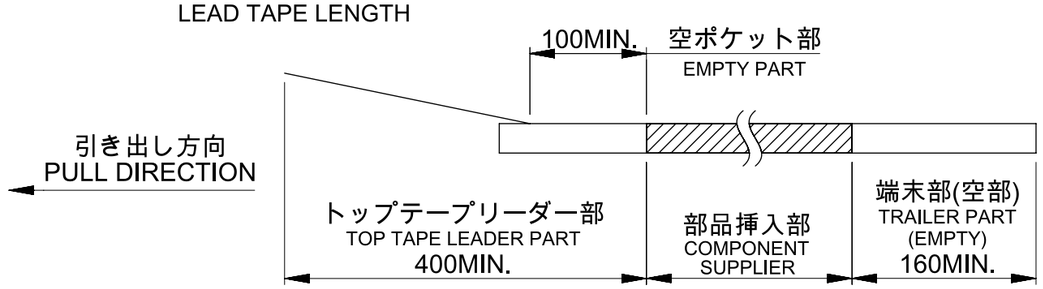

3. トップテープの剥離強度については、IEC60286-3に準拠。
   TOP TAPE PEEL FORCE IS DEFINED BY IEC 60286-3.

4. 製品詳細寸法については、図面 2203631000-SD を参照下さい。
   DIMENTIONS OF PRODUCT, REFER TO 2203631000-SD.

5. 材料　MATERIAL
   キャリアテープ : ポリスチレン
   トップテープ　 : ポリエチレンテレフタレート、ポリエチレン
   リール　　　　 : ポリスチレン < リサイクル材を含む >
   CARRIER TAPE : POLYSTYRENE
   TOP TAPE : POLYETHYLENE TEREPHTALATE, POLYETHYLENE
   REEL : POLYSTYRENE < RECYCLE MATERIAL CONTAINED >

FUNCTIONAL SYMBOLS: FA = 0, FC = 0, FP = 0	THIS DRAWING CONTAINS INFORMATION THAT IS PROPRIETARY TO MOLEX ELECTRONIC TECHNOLOGIES, LLC AND SHOULD NOT BE USED WITHOUT WRITTEN PERMISSION					
DIVISIONAL SYMBOLS	DIMENSION UNITS: mm; SCALE: 2:1	CURRENT REV DESC: Unfreeze the drawing and Added 100ckt	molex			
	GENERAL TOLERANCES (UNLESS SPECIFIED): ANGULAR TOL ± 3°; 4 PLACES ± 0.20000; 3 PLACES ± 0.2000; 2 PLACES ± 0.200; 1 PLACE ± 0.20; 0 PLACES ± 0.20	STATUS: Production DRWN: Kwan Yeong Hwang 2026-09-29 CHK'D: Hideki Iijima 2026-10-09 APPR: Kenta Sasaki 2026-10-09	EASY-ON FD4P 0.4MM PITCH FPC CONNECTOR ZIF FRONTFLIP EMBOSSED PACKAGE			
	DRAFT WHERE APPLICABLE MUST REMAIN WITHIN DIMENSIONS	THIRD ANGLE PROJECTION; DRAWING: A3-SIZE; SERIES: 220363	PRODUCT CUSTOMER DRAWING			
			DOCUMENT NUMBER: 2203630000-SD	DOC TYPE: PSD	DOC PART: 000	REVISION: C
			MATERIAL NUMBER: SEE TABLE	CUSTOMER: GENERAL MARKET		SHEET NUMBER: 1 OF 2

FORMAT: TC-db-prod-A3
REVISION: B
DATE: 2022/08/01

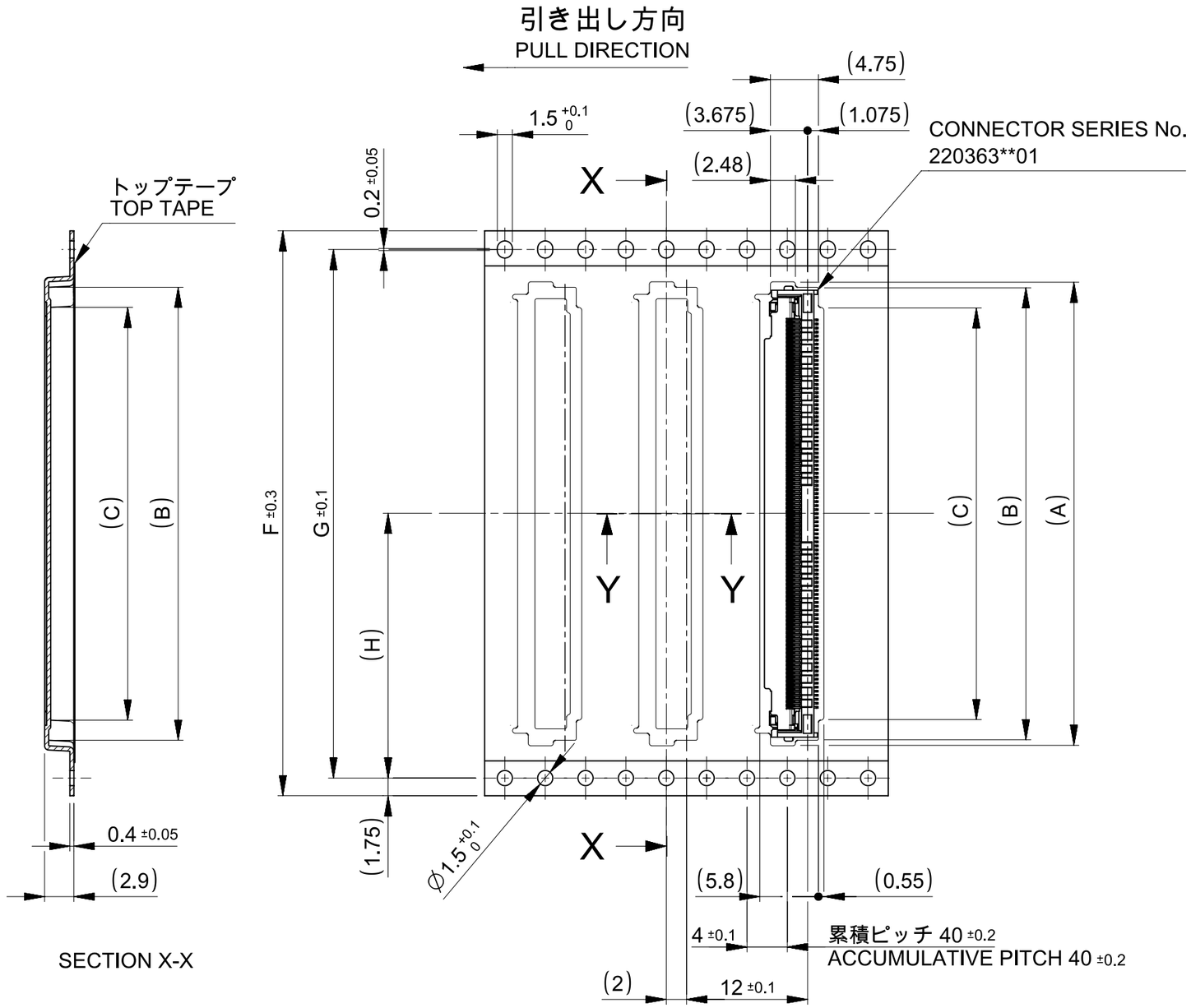

SECTION X-X

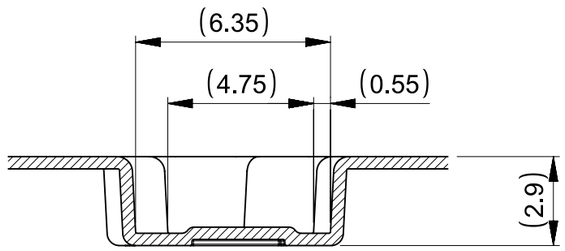

SECTION Y-Y
SCALE 5:1

80	34.2	68.4	72	77.4	73.4	48.5	53.7	54.8	2203631200	120
						40.5	45.7	46.8	2203631000	100
	26.2	52.4	56	61.4	57.4	32.5	37.7	38.8	2203630800	80
J	H	G	F	E	D	C	B	A	EMBOSSED PACKAGE オーダー番号 ORDER No.	CIRCUIT

THIS DRAWING CONTAINS INFORMATION THAT IS PROPRIETARY TO MOLEX ELECTRONIC TECHNOLOGIES, LLC AND SHOULD NOT BE USED WITHOUT WRITTEN PERMISSION

FUNCTIONAL SYMBOLS
FA = 0
FC = 0
FF = 0

DIVISIONAL SYMBOLS

DIMENSION UNITS	SCALE
mm	2:1

GENERAL TOLERANCES (UNLESS SPECIFIED)

ANGULAR TOL	± 3°
4 PLACES	± 0.20000
3 PLACES	± 0.2000
2 PLACES	± 0.200
1 PLACE	± 0.20
0 PLACES	± 0.20

DRAFT WHERE APPLICABLE MUST REMAIN WITHIN DIMENSIONS

CURRENT REV DESC: Unfreeze the drawing and Added 100ckt

STATUS: Production
DRWN: Kwan Yeong Hwang 2026-09-29
CHK'D: Hideki Iijima 2026-10-09
APPR: Kenta Sasaki 2026-10-09

THIRD ANGLE PROJECTION | DRAWING: A3-SIZE | SERIES: 220363

molex

EASY-ON FD4P
0.4MM PITCH FPC CONNECTOR ZIF FRONTFLIP
EMBOSSED PACKAGE

PRODUCT CUSTOMER DRAWING

DOCUMENT NUMBER	DOC TYPE	DOC PART	REVISION
2203630000-SD	PSD	000	C

MATERIAL NUMBER	CUSTOMER	SHEET NUMBER
SEE TABLE	GENERAL MARKET	2 OF 2

FORMAT: TC-db-prod-A3
REVISION: B
DATE: 2022/08/01

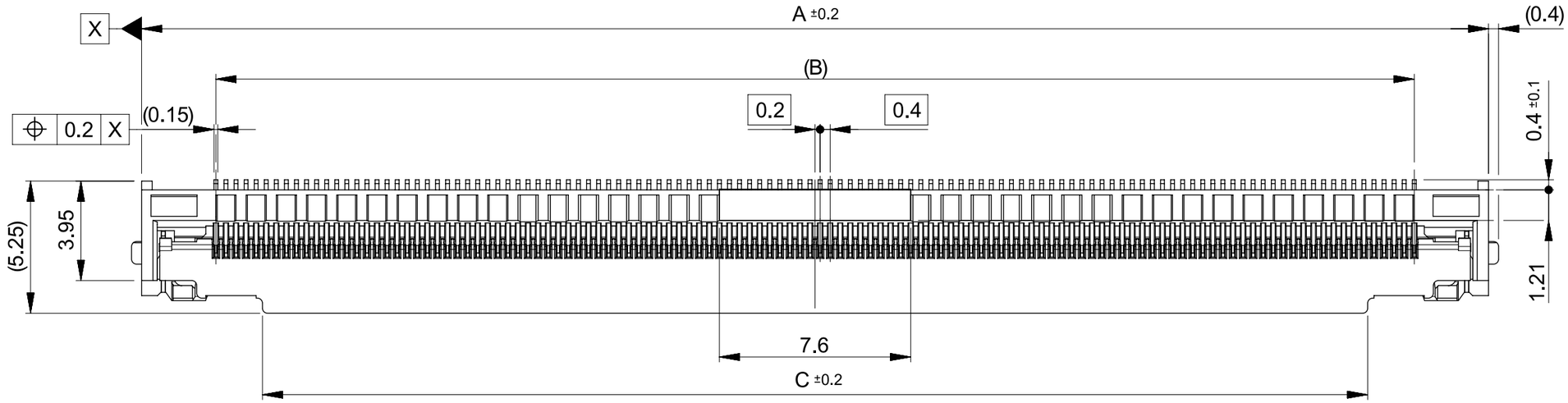

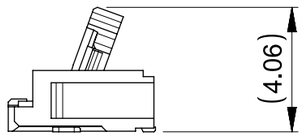

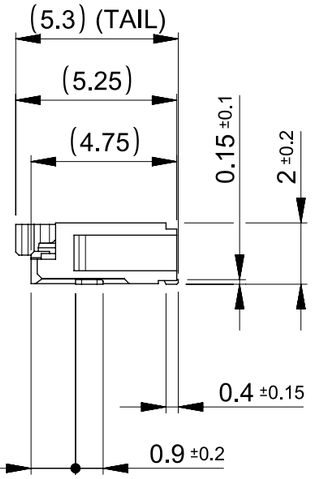

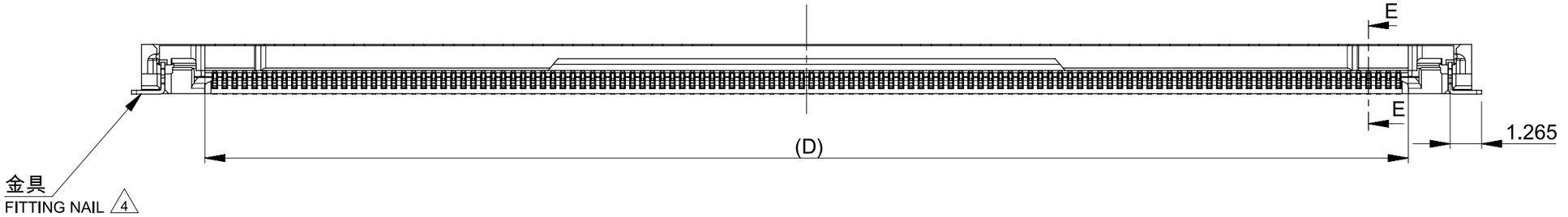

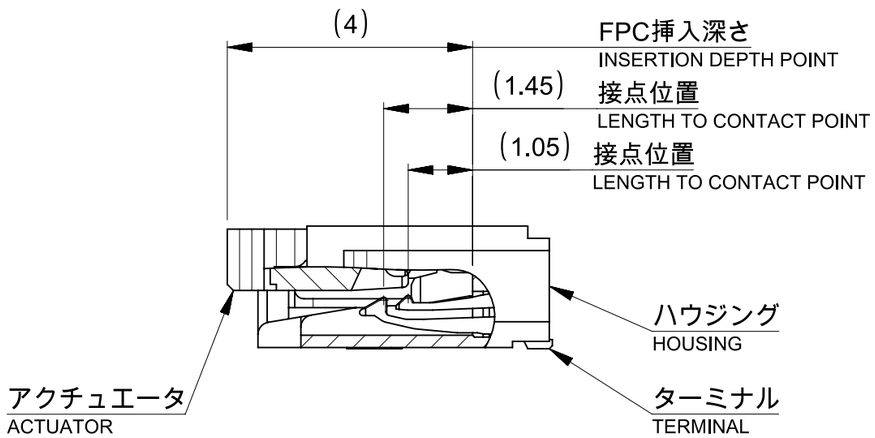

SECTION E-E
SCALE 10:1

48.4	43.9	47.6	53.5	2203631200	120
40.4	35.9	39.6	45.5	2203631000	100
32.4	27.9	31.6	37.5	2203630800	80
D	C	B	A	EMBOSSED PACKAGE オーダー番号 ORDER No	CIRCUIT

CONNECTOR SERIES No. 220363**01

THIS DRAWING CONTAINS INFORMATION THAT IS PROPRIETARY TO MOLEX ELECTRONIC TECHNOLOGIES, LLC AND SHOULD NOT BE USED WITHOUT WRITTEN PERMISSION

FUNCTIONAL SYMBOLS
FA = 0
FC = 0
FP = 0
DIVISIONAL SYMBOLS

DIMENSION UNITS	SCALE
mm	5:1
GENERAL TOLERANCES (UNLESS SPECIFIED)	
ANGULAR TOL ± 5°	
4 PLACES	± 0.20000
3 PLACES	± 0.2000
2 PLACES	± 0.200
1 PLACE	± 0.20
0 PLACES	± 0.20

DRAFT WHERE APPLICABLE MUST REMAIN WITHIN DIMENSIONS

CURRENT REV DESC: Unfreeze the drawing and Added 100ckt

STATUS: Production
DRWN: Kwan Yeong Hwang 2026-09-29
CHK'D: Hideki Iijima 2026-10-09
APPR: Kenta Sasaki 2026-10-09

molex

EASY-ON FD4P
0.4MM PITCH FPC CONNECTOR ZIF FRONTFLIP

PRODUCT CUSTOMER DRAWING

DOCUMENT NUMBER	DOC TYPE	DOC PART	REVISION
2203631000-SD	PSD	000	C

THIRD ANGLE PROJECTION	DRAWING	SERIES	MATERIAL NUMBER	CUSTOMER	SHEET NUMBER
	A3-SIZE	220363	SEE TABLE	GENERAL MARKET	1 OF 3

FORMAT: TC-db-prod-A3
REVISION: B
DATE: 2022/08/01

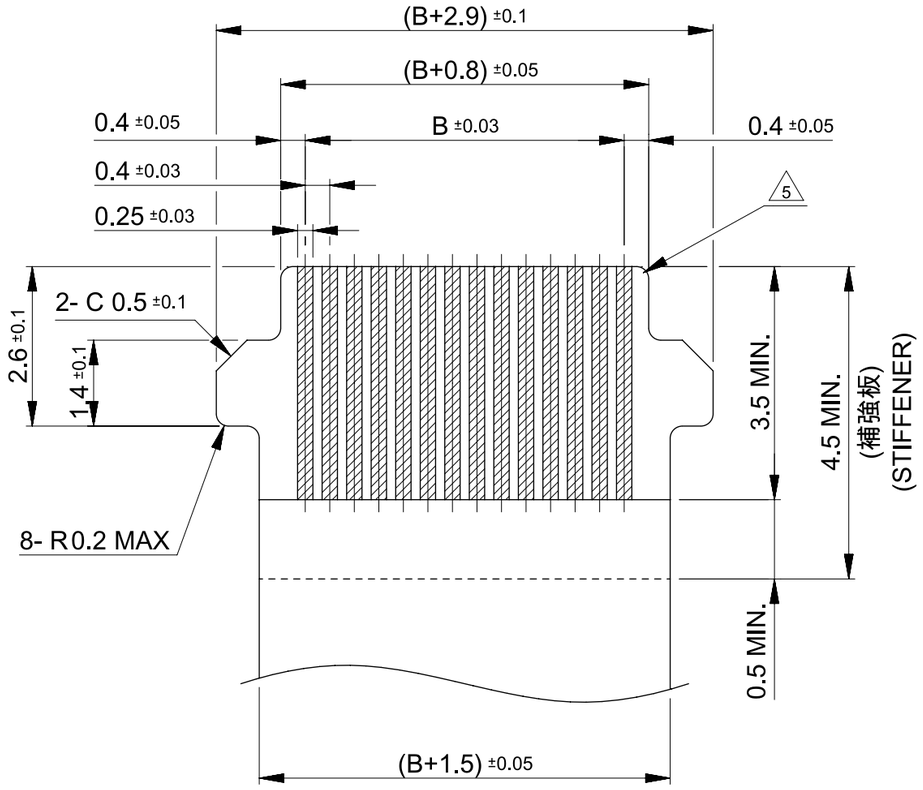

適合FPC推奨寸法
APPLICABLE FPC RECOMMENDED DIMENSION

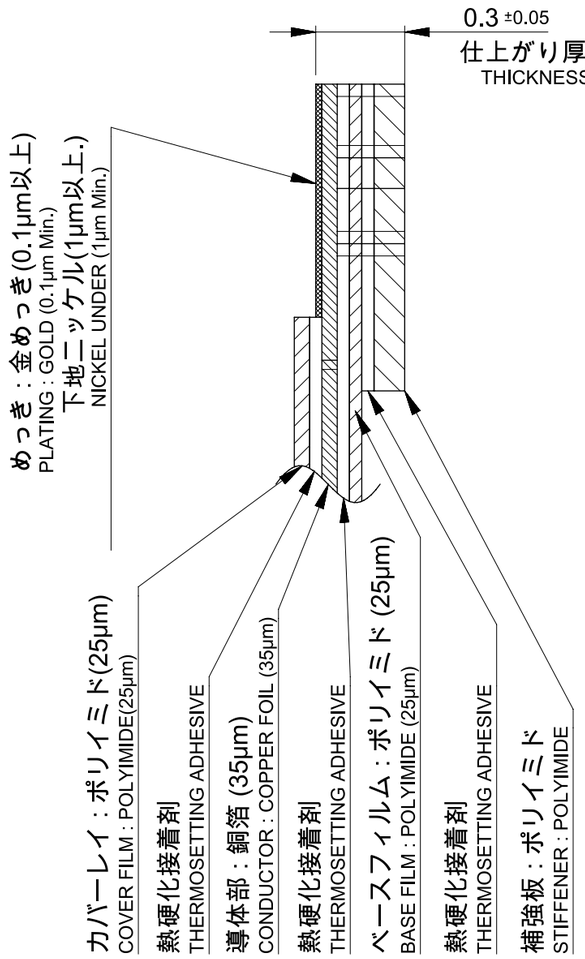

FPC構成推奨仕様
STRUCTURE OF FPC

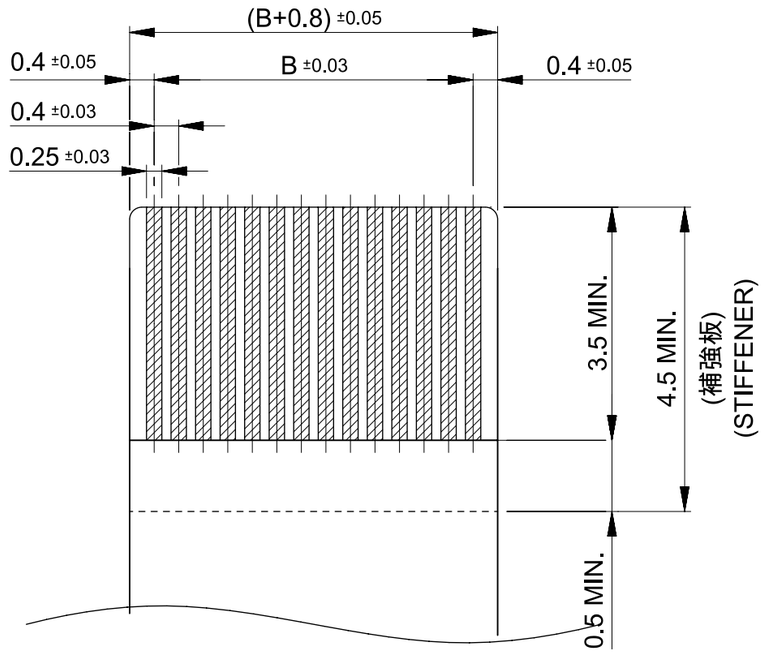

適合FPC推奨寸法
APPLICABLE FPC RECOMMENDED DIMENSION

FPCについて　ABOUT FPC

打ち抜き方向は導体側から補強板側を推奨します。
導体部については軟箔銅35μmまたは50μmを推奨します。
補強フィルム材質はポリイミドを推奨します。ベースフィルムは25μmを推奨します。
接着剤は熱硬化接着剤を推奨します。
尚、接着剤の接点部への付着は導通不良の原因になりますので、染み出しが無い様お願い致します。

RECOMMENDED PUNCHING DIRECTION : FROM CONDUCTOR SIDE TO STIFFENER SIDE
RECOMMENDED CONDUCTOR SPEC : SOFT COPPER FOIL
RECOMMENDED CONDUCTOR THICKNESS : 35 MICROMETER OR 50 MICROMETER.
RECOMMENDED STIFFENER MATERIAL : POLYIMIDE
RECOMMENDED BASE FILM THICKNESS : 25 MICROMETER
RECOMMENDED ADHESIVE : THERMOSETTING ADHESIVE
NOTE : PLEASE PUT APPROPRIATE AMOUNT OF ADHESIVE ON ADHEREND BECAUSE THERE IS A POSSIBILITY THAT THE EXTRA ADHESIVE CAUSES THE DEFECT IN ELECTRICAL CONTINUITY.

THIS DRAWING CONTAINS INFORMATION THAT IS PROPRIETARY TO MOLEX ELECTRONIC TECHNOLOGIES, LLC AND SHOULD NOT BE USED WITHOUT WRITTEN PERMISSION

FUNCTIONAL SYMBOLS	DIMENSION UNITS	SCALE	CURRENT REV DESC: Unfreeze the drawing and Added 100ckt	molex
FA = 0	mm	10:1		
FC = 0	GENERAL TOLERANCES (UNLESS SPECIFIED)			EASY-ON FD4P 0.4MM PITCH FPC CONNECTOR ZIF FRONTFLIP
FP = 0	ANGULAR TOL ± 5°			
DIVISIONAL SYMBOLS	4 PLACES	± 0.20000		PRODUCT CUSTOMER DRAWING
	3 PLACES	± 0.2000		
	2 PLACES	± 0.200	STATUS: Production	DOCUMENT NUMBER: 2203631000-SD; DOC TYPE: PSD; DOC PART: 000; REVISION: C
	1 PLACE	± 0.20	DRWN: Kwan Yeong Hwang 2026-09-29	
	0 PLACES	± 0.20	CHK'D: Hideki Iijima 2026-10-09	
	DRAFT WHERE APPLICABLE MUST REMAIN WITHIN DIMENSIONS		APPR: Kenta Sasaki 2026-10-09	
			THIRD ANGLE PROJECTION; DRAWING: A3-SIZE; SERIES: 220363	MATERIAL NUMBER: SEE TABLE; CUSTOMER: GENERAL MARKET; SHEET NUMBER: 2 OF 3

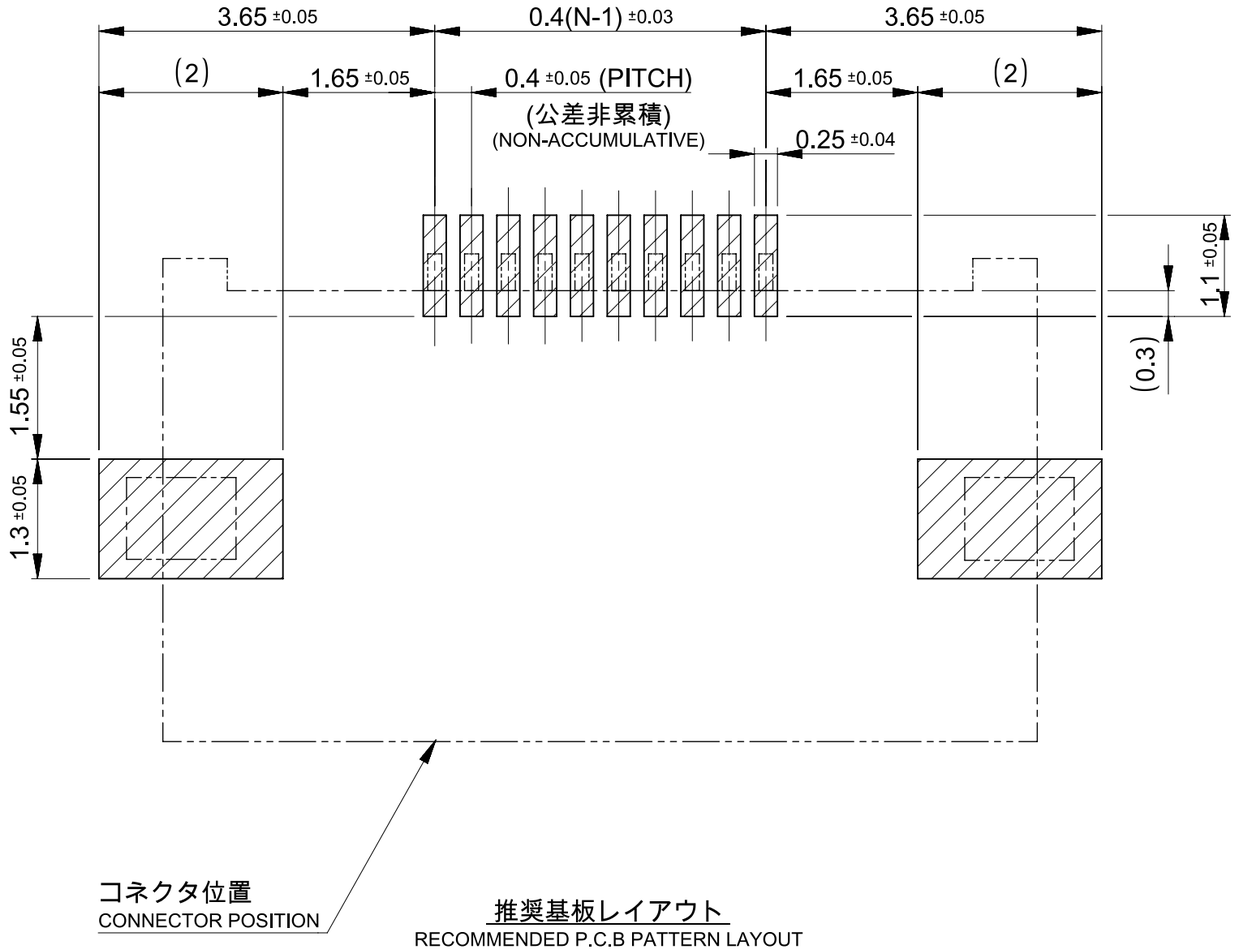

コネクタ位置
CONNECTOR POSITION

推奨基板レイアウト
RECOMMENDED P.C.B PATTERN LAYOUT

参考マスク厚 : 0.1mm
REFERENCE SCREEN THICKNESS : 0.1mm

参考マスク開口率 : 80%
REFERENCE SCREEN OPEN RATIO : 80%

注記　NOTES

1. 使用材料　MATERIAL

ハウジング HOUSING	:	液晶ポリマー　ガラス充填、UL94V-0、黒 LIQUID CRYSTAL POLYMER　GLASS FILLED, UL94V-0 BLACK
アクチュエータ ACTUATOR	:	ポリアミド　ガラス充填、UL94V-0、ナチュラル (白) POLYAMIDE GLASS FILLED, UL94V-0、NATURAL (WHITE)
ターミナル TERMINAL	:	リン青銅 (t=0.15) PHOSPHOR BRONZE
金具 FITTING NAIL	:	リン青銅 (t=0.15) PHOSPHOR BRONZE

2. めっき仕様　PLATING

ターミナル TERMINAL
コンタクト部 : 部分金めっき (0.05μm以上)
CONTACT AREA : SEPARATED GOLD PLATING (0.05μm MINIMUM)

テール部 : 部分金めっき
SOLDER TAIL AREA : SEPARATED GOLD PLATING

下地:ニッケルめっき (1.0μm以上)
UNDERPLATE : NICKEL OVERALL (1.0μm MINIMUM)

金具 FITTING NAIL
錫めっき (1.0μm以上)
TIN PLATING (1.0μm MINIMUM)

下地:ニッケルめっき (1.0μm以上)
UNDER PLATING : NICKEL PLATING (1.0μm MINIMUM)

3. エンボステープ梱包時は、アクチュエータが閉じた状態とする。
IN THE PACKAGE, ACTUATOR OF PART SHOULD BE CLOSED.

△4 パターン剥離止め用金具
FITTING NAIL FOR PREVENTING PEELING OF P.C.B. PATTERN.

△5 R0.2はFPC導体部にかからないこと。
R0.2 MUST NOT BE OVERLAPPED TO PATTERN OF FPC.

6. N : 極数　N : CIRCUIT

7. テールと金具を併せた平坦度は0.1mm以下とする。
TAILS AND NAILS COPLANALITY TO BE 0.1mm MAXIMUM.

FUNCTIONAL SYMBOLS
FA = 0
FC = 0
FD = 0
DIVISIONAL SYMBOLS

THIS DRAWING CONTAINS INFORMATION THAT IS PROPRIETARY TO MOLEX ELECTRONIC TECHNOLOGIES, LLC AND SHOULD NOT BE USED WITHOUT WRITTEN PERMISSION

DIMENSION UNITS	SCALE
mm	15:1
GENERAL TOLERANCES (UNLESS SPECIFIED)	
ANGULAR TOL	± 5°
4 PLACES	± 0.20000
3 PLACES	± 0.2000
2 PLACES	± 0.200
1 PLACE	± 0.20
0 PLACES	± 0.20

DRAFT WHERE APPLICABLE MUST REMAIN WITHIN DIMENSIONS

CURRENT REV DESC: Unfreeze the drawing and Added 100ckt

STATUS: Production
DRWN: Kwan Yeong Hwang 2026-09-29
CHK'D: Hideki Iijima 2026-10-09
APPR: Kenta Sasaki 2026-10-09

molex

EASY-ON FD4P
0.4MM PITCH FPC CONNECTOR ZIF FRONTFLIP

PRODUCT CUSTOMER DRAWING

DOCUMENT NUMBER	DOC TYPE	DOC PART	REVISION
2203631000-SD	PSD	000	C

THIRD ANGLE PROJECTION	DRAWING	SERIES	MATERIAL NUMBER	CUSTOMER	SHEET NUMBER
	A3-SIZE	220363	SEE TABLE	GENERAL MARKET	3 OF 3

FORMAT: TC-tb-prod-A3
REVISION: B
DATE: 2022/08/01