MASM-14 14mm Close-Differential Reed Switch



Agency Approvals

Agency	Agency File Number	Ampere-Turns Range
c UL us	E47258 E471070	10-30 AT

Note: Contact Littelfuse for specific agency approval ratings.

Dimensions

Dimensions in mm (inch)

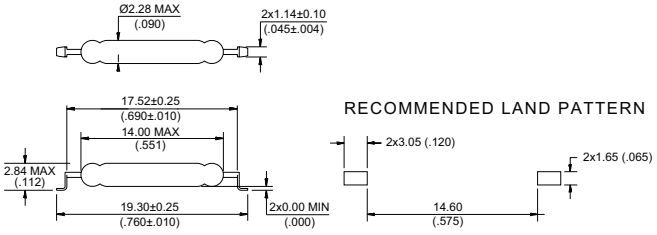

Note: Land pattern is Littelfuse recommendation only. User is responsible for proper PCB design.

Description

The MASM-14 surface mount reed switch is a close-differential, sub-miniature, normally open switch with a 14mm long x 2.28mm diameter (0.551" x 0.090") glass envelope, capable of switching 200Vdc at 10W.

This reed switch is a surface mount version of MACD-14. It has high insulation resistance of 10^{10} ohms minimum and a contact resistance of less than 100 milliohms. Both reed switches are intended for use in applications that require low hysteresis between Pull-In and Drop-Out values.

Features

- Surface mount normally open switch
- Capable of switching 200Vdc or 0.5A at up to 10W
- Low close/open hysteresis (close differential)

Benefits

- Hermetically sealed switch contacts are not affected by and have no effect on their external environment
- Zero operating power required for contact closure
- Excellent for switching micro-controller logic level loads

Applications

- Position Sensing
- Level Sensing
- Security
- Industrial Controls
- Office Equipment
- Home Appliances

Switch Type

Contact Form	A (SPST-NO)
Materials	Body: Glass Leads: Tin-plated Ni-Fe wire

Note: SPST-NO = Single-pole, single-throw, normally open

Electrical Ratings

Contact Rating [1]		W/VA - max.	10
Voltage [3]	Switching [2]	Vdc - max. Vac - max.	200 140
	Breakdown [4]	Vdc - min.	200
Current [3]	Switching [2]	Adc - max. Aac - max.	0.50 0.35
	Carry	Adc - max.	1.00
Resistance	Contact, Initial Insulation	Ω - max. Ω - min.	0.100 10^{10}
Capacitance	Contact	pF - typ.	0.3
Temperature	Operating Storage [5]	°C °C	-40 to +125 -65 to +125

Notes:
1. Contact rating - Product of the switching voltage and current should never exceed the wattage rating. Contact Littelfuse for additional load/life information.
2. When switching inductive and/or capacitive loads, the effects of transient voltages and/or currents should be considered. Refer to Application Notes AN108A and AN107 for details.
3. Electrical Load Life Expectancy - Contact Littelfuse with voltage, current values along with type of load.
4. Breakdown Voltage - per MIL-STD-202, Method 301.
5. Storage Temperature - Long time exposure at elevated temperature may degrade solderability of the leads.

© 2020 Littelfuse Revised: BO.12/07/20
Specifications are subject to change without notice.

Littelfuse
Expertise Applied | Answers Delivered

MASM-14 14mm Close-Differential Reed Switch

Product Characteristics

Operating Characteristics		
Operate Time [1]		0.6ms - max.
Release Time [1]		0.2ms - max.
Shock [2]	11ms 1/2 sine wave	100G - max.
Vibration [2]	50-2000 Hertz	30G - max.
Resonant Frequency		5.3kHz typ
Magnetic Characteristics		
Pull-In Range [3]	Ampere Turns	10-15, 15-20, 20-25, 25-30
Rating Sensitivity [4]	Ampere Turns	20
Test Coil		L4989

Notes:
1. Operate (including bounce)/Release Time - per EIA/NARM RS-421-A,diode suppressed coil (Coil II).
2. Shock and Vibration - per EIA/NARM RS-421-A and MIL-STD-202.
3. Pull-In Range - Contact Littelfuse for narrower AT ranges available. These AT ranges are the before modification AT of the MACD-14.
4. Rating Sensitivity - The value at which contact ratings and operating characteristics are determined. Derating may be required below this value.

Drop-Out vs. Pull-In Chart

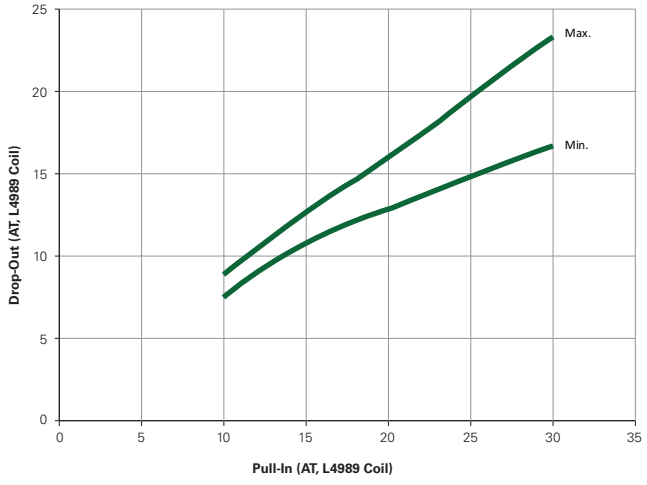

Note:
Chart represents the range of Drop Out, min to max for a given Pull-In value of the MACD-14 prior to modification into the MASM-14.

Part Numbering System

MASM-14 R - 10-15

Series

Packaging
R = Tape and Reel

AT Range
10-15 AT
15-20 AT
20-25 AT
25-30 AT

Packaging

Packaging Option	Packaging Specification	Quantity	Quantity & Packaging Code	Taping Width
Tape and Reel	EIA-RS-481-1	3000	R	32mm

© 2020 Littelfuse Revised: BO.12/07/20
Specifications are subject to change without notice.

littelfuse.com

MASM-14 14mm Close-Differential Reed Switch

TAPE DIMENSIONS mm (inch)

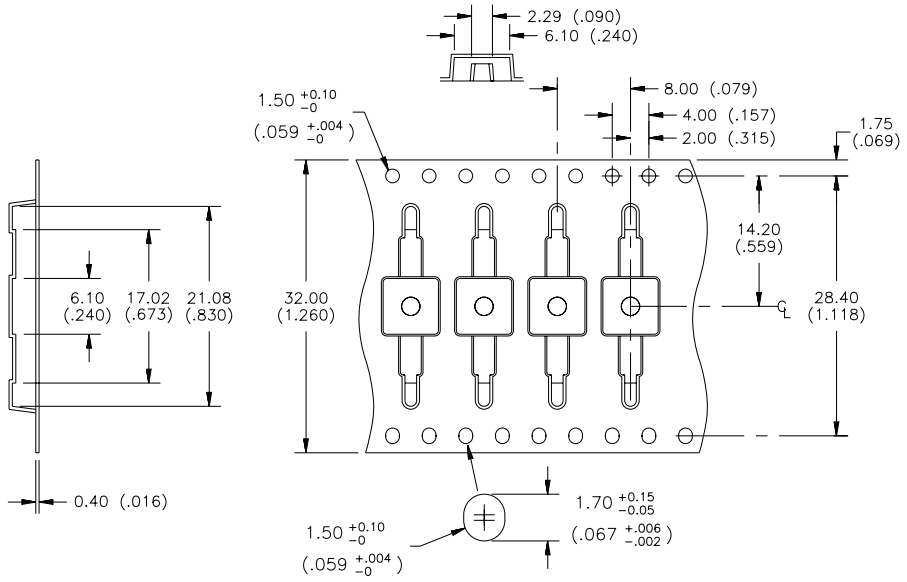

REEL DIMENSIONS mm (inch)

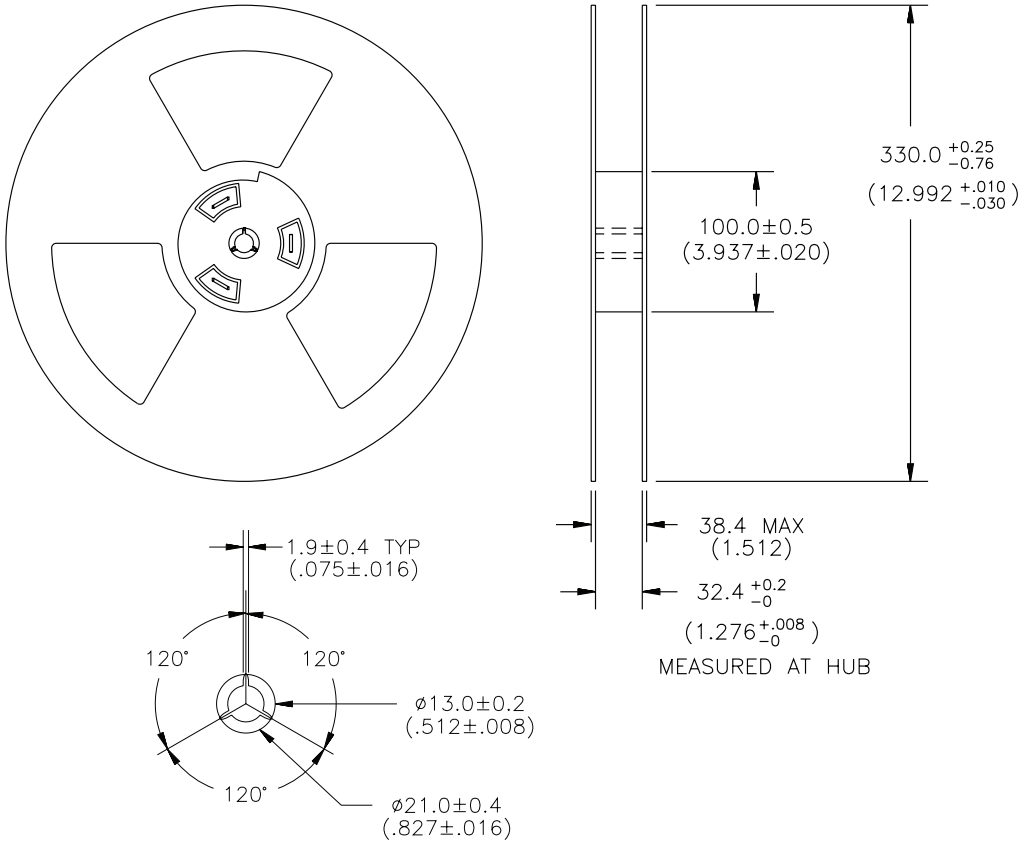

© 2020 Littelfuse Revised: BO.12/07/20
Specifications are subject to change without notice.