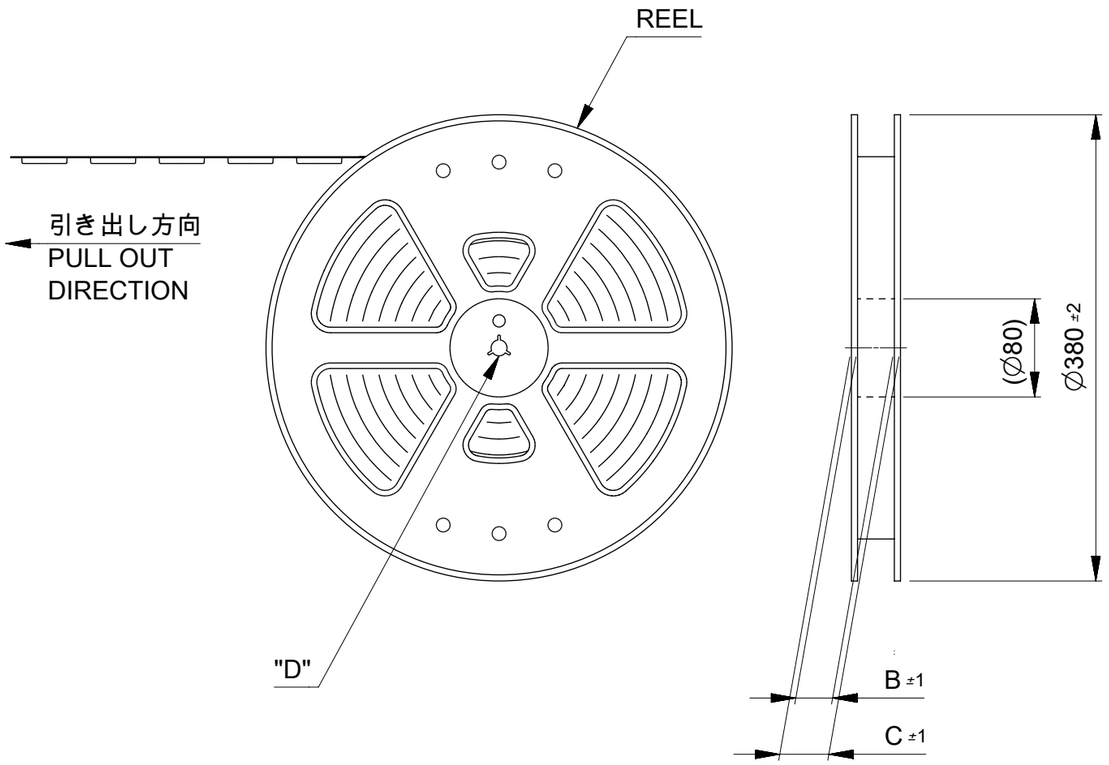

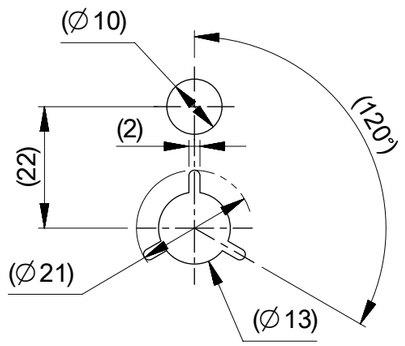

DETAIL "D"

NOTES

1. 製品詳細寸法については製品単体図面を参照下さい。
   FOR DETAILED DIMENSION, SEE PRODUCT DRAWING.
2. 梱包数量：シート 2, 3, 4の表をご確認ください。
   NUMBER OF CONNECTORS : SEE CHART ON SHEET 2, 3, 4
3. リードテープ長さ LEAD TAPE LENGTH

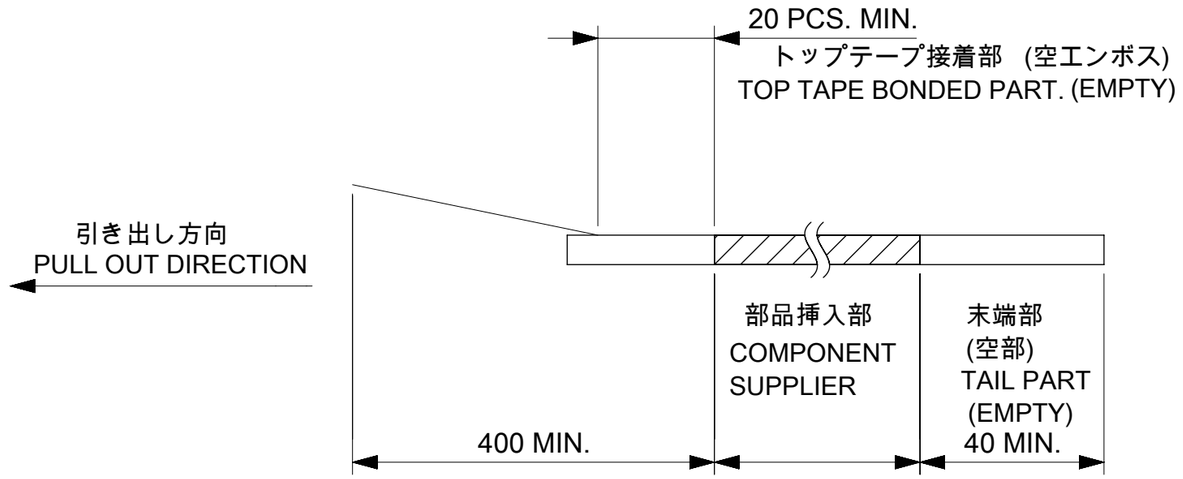

4. カバーテープの剥離強度については、IEC-60286-3に準拠
   COVER TAPE PEEL FORCE IS DEFINED BY IEC-60286-3.
5. 材料 MATERIAL
   キャリアテープ(CARRIER TAPE) : ポリスチレン(POLYSTYRENE)
   トップテープ(TOP TAPE) : PET , OTHER
   リール(REEL) : ポリスチレン(PS) (リサイクル材を含む)
   POLYSTYRENE (PS) (RECYCLE MATERIAL CONTAINED)

THIS DRAWING CONTAINS INFORMATION THAT IS PROPRIETARY TO MOLEX ELECTRONIC TECHNOLOGIES, LLC AND SHOULD NOT BE USED WITHOUT WRITTEN PERMISSION

DIMENSION UNITS	mm
SCALE	NTS
GENERAL TOLERANCES (UNLESS SPECIFIED)	
ANGULAR TOL	± 3.0 °
4 PLACES	± 0.03
3 PLACES	± 0.03
2 PLACES	± 0.05
1 PLACE	± 0.1
0 PLACES	± 0.2
DRAFT WHERE APPLICABLE MUST REMAIN WITHIN DIMENSIONS	

CURRENT REV DESC: REMOVED OBSOLETED PART NUMBERS AS PER PCN#516673

EC NO: 850267
DRWN: SAMPRS 2026/01/27
CHK'D: GGA 2026/03/13
APPR: GGA 2026/03/13

INITIAL REVISION:
DRWN: KYHWANG 2020/03/04
APPR: SHOSHIKAWA 2020/04/13

molex

0.4 MM PITCH BOARD-TO-BOARD CONNECTOR
HIGH RETENTION FORCE (HRF) 7S/7L
PLUG ASSY EMBSTP PKG

PRODUCT CUSTOMER DRAWING

THIRD ANGLE PROJECTION	DRAWING	SERIES	MATERIAL NUMBER	CUSTOMER	SHEET NUMBER
	A3-SIZE	503552	SEE CHART	GENERAL	1 OF 2

DOCUMENT NUMBER	DOC TYPE	DOC PART	REVISION
5035520000-SD	PSD	000	A1

DOCUMENT STATUS	P1	RELEASE DATE	2026/03/13 14:36:23

FORMAT: master-ib-prod-A3
REVISION: J1
DATE: 2021/05/01

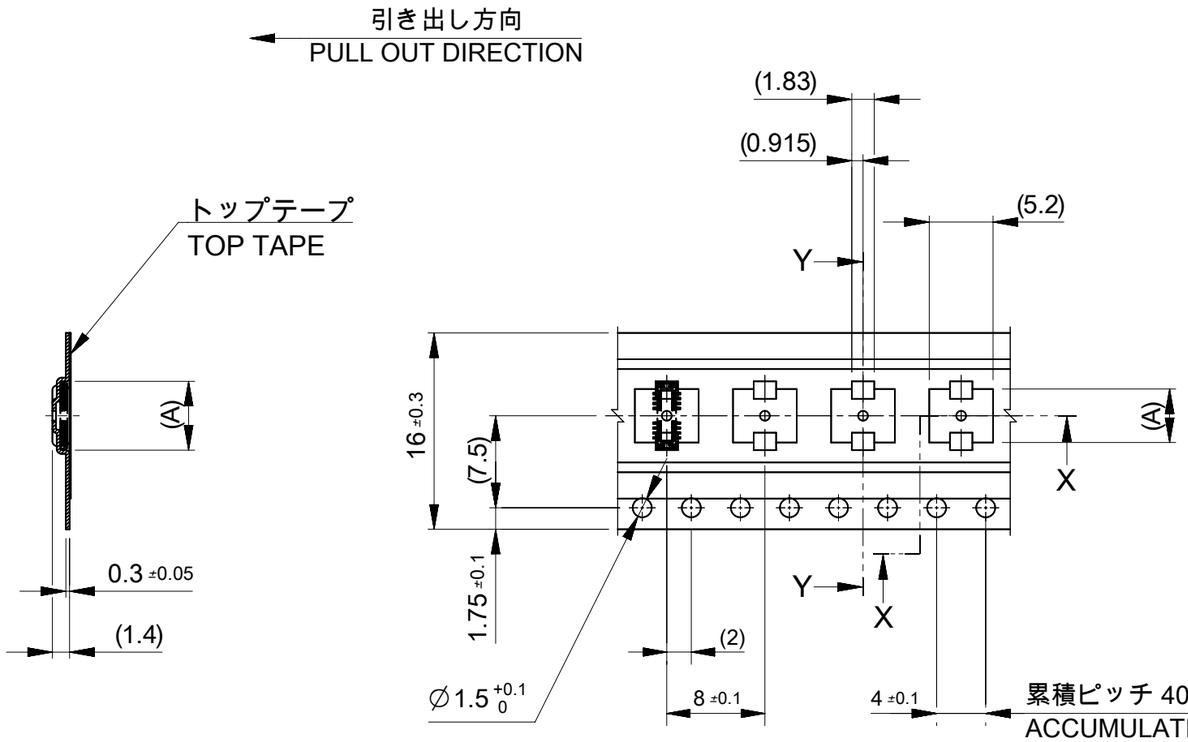

SECTION Y-Y

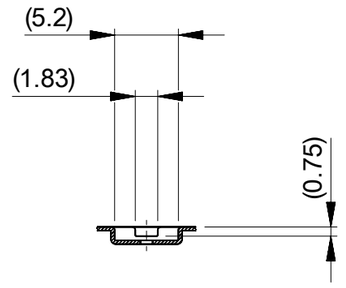

SECTION X-X

16 mm 幅キャリアテープ
16 mm WIDTH CARRIER TAPE

キャリアテープ幅 CARRIER TAPE WIDTH	NUMBER OF CONNECTORS [PCS/REEL]	C	B	(A)	ORDER No.	CKT.
16	7000	21.4	17.4	5.21	5035521822	18
				4.81	5035521622	16
				4.41	5035521422	14
				4.01	5035521222	12
				3.61	5035521022	10
				2.81	5035520622	6

THIS DRAWING CONTAINS INFORMATION THAT IS PROPRIETARY TO MOLEX ELECTRONIC TECHNOLOGIES, LLC AND SHOULD NOT BE USED WITHOUT WRITTEN PERMISSION

DIMENSION UNITS	SCALE
mm	NTS

GENERAL TOLERANCES (UNLESS SPECIFIED)

ANGULAR TOL	±	3.0 °
4 PLACES	±	0.03
3 PLACES	±	0.03
2 PLACES	±	0.05
1 PLACE	±	0.1
0 PLACES	±	0.2

DRAFT WHERE APPLICABLE MUST REMAIN WITHIN DIMENSIONS

CURRENT REV DESC: REMOVED OBSOLETED PART NUMBERS AS PER PCN#516673

EC NO: 850267
DRWN: SAMPRS 2026/01/27
CHK'D: GGA 2026/03/13
APPR: GGA 2026/03/13

INITIAL REVISION:
DRWN: KYHWANG 2020/03/04
APPR: SHOSHIKAWA 2020/04/13

THIRD ANGLE PROJECTION | DRAWING: A3-SIZE | SERIES: 503552

molex

0.4 MM PITCH BOARD-TO-BOARD CONNECTOR
HIGH RETENTION FORCE (HRF) 7S/7L
PLUG ASSY EMBSTP PKG

PRODUCT CUSTOMER DRAWING

DOCUMENT NUMBER	DOC TYPE	DOC PART	REVISION
5035520000-SD	PSD	000	A1

MATERIAL NUMBER	CUSTOMER	SHEET NUMBER
SEE CHART	GENERAL	2 OF 2

DOCUMENT STATUS	P1	RELEASE DATE	2026/03/13 14:36:23

FORMAT: master-lb-prod-A3
REVISION: J1
DATE: 2021/05/01

503552-**22 6 ~ 18 CKT.

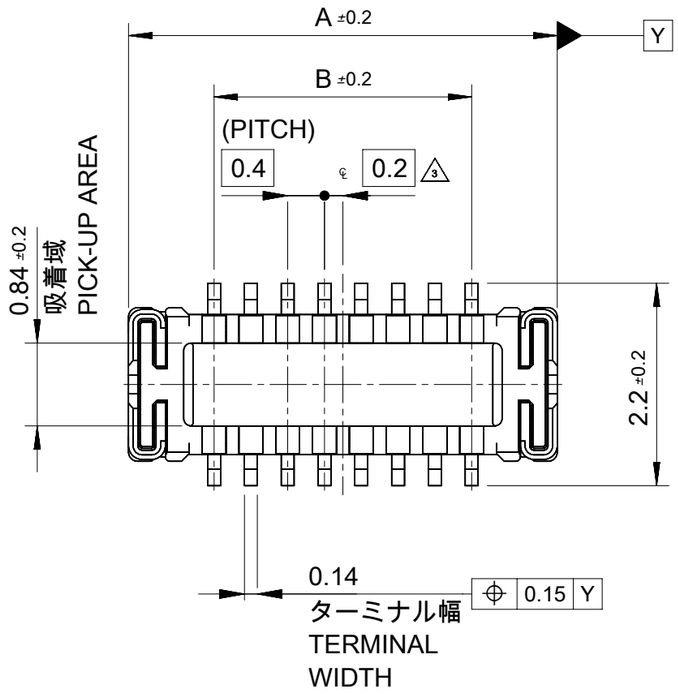

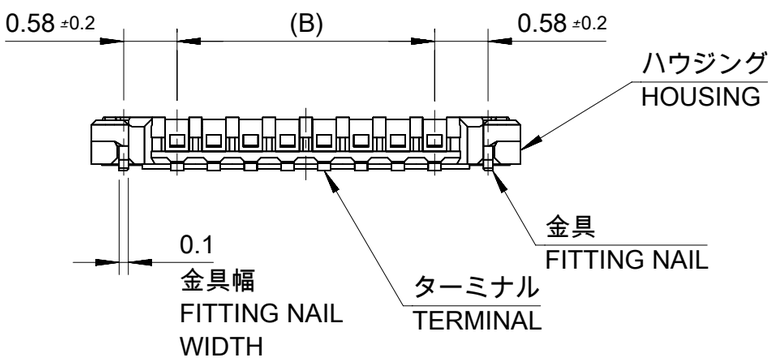

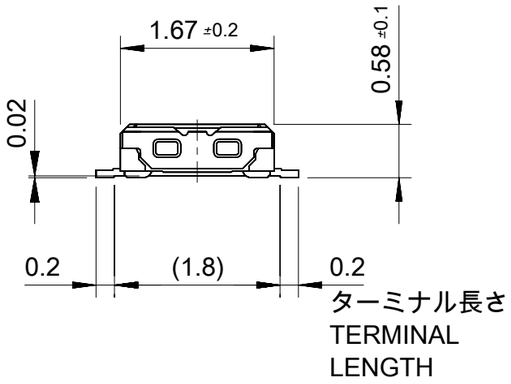

注記 NOTES

1. 使用材料 MATERIAL
   ハウジング：液晶ポリマー(LCP) UL94V-0 (黒)
   HOUSING : LIQUID CRYSTAL POLYMER, UL94V-0 (COLOR : BLACK)
   ターミナル：銅合金
   TERMINAL : COPPER ALLOY
   金具：銅合金
   FITTING NAIL : COPPER ALLOY
2. メッキ仕様 PLATING
   ターミナル TERMINAL
   コンタクト部：金メッキ (0.1μm以上)
   CONTACT AREA : GOLD (0.1μm MINIMUM)
   テール部：金メッキ
   SOLDER TAIL AREA : GOLD
   下地メッキ：ニッケルメッキ (1.0μm以上)
   UNDER PLATING : NICKEL (1.0μm MINIMUM)
   ※ コンタクト部とテール部の基板接触面には金メッキを施しています。
   それ以外の個所には金メッキもしくはニッケルメッキが露出し、
   外観上、色調が異なる場合がありますが、性能には影響ありません。
   但し、コンタクト部とテール部の間にはニッケルメッキで
   金メッキを分断している個所があります。
   THE CONTACT PART AND SOLDER TAIL SURFACE OF TERMINAL WHICH CONTACTS PAD OF PWB ARE PLATED WITH GOLD.
   THE OTHER SURFACES ARE PLATED WITH GOLD OR NICKEL UNDERPLATING EXCEPT CUTOFF.
   THE GOLD PLATING IS DIVIDED INTO TWO SECTIONS BY NICKEL, WHICH ARE CONTACT AND SOLDER TAIL PARTS.
   IT IS NO PROBLEM IN THE PERFORMANCE ALTHOUGH THOSE MAY SEEM DIFFERENT COLOR TONE.
   金具 FITTING NAIL
   金メッキ (テール部のみ)
   GOLD (ONLY TAIL PART)
   下地メッキ：ニッケルメッキ
   UNDER PLATING : NICKEL
3. △3 (全極数/2)=偶数の場合に適用。
   APPLY FOR (CIRCUIT/2)=EVEN.
4. 嵌合相手：503548シリーズ
   MATE WITH : 503548 SERIES.
5. テール平坦度は、0.08以下、テール及び金具の平坦度は、0.1以下。
   TAIL COPLANARITY TO BE 0.08 MAXIMUM.
   TAIL AND FITTING NAIL COPLANARITY TO BE 0.1 MAXIMUM.
6. 本0.4 mm ピッチBOARD-TO-BOARD CONNECTOR HRF 7S/7L シリーズは503304 / 503308と503548 / 503552シリーズを統合した製品群です
   THIS PRODUCT FAMILY, 0.4 MM PITCH BOARD-TO-BOARD CONNECTOR HRF 7S/7L, IS WHAT 503304 AND 503548 SERIES WERE UNIFIED.

3.2	5.06	5035521822	18
2.8	4.66	1622	16
2.4	4.26	1422	14
2.0	3.86	1222	12
1.6	3.46	1022	10
0.8	2.66	5035520622	6
B	A	EMBOSSED PACKAGE オーダー番号 ORDER No.	極数 CIRCUITS

THIS DRAWING CONTAINS INFORMATION THAT IS PROPRIETARY TO MOLEX ELECTRONIC TECHNOLOGIES, LLC AND SHOULD NOT BE USED WITHOUT WRITTEN PERMISSION

DIMENSION UNITS	mm
SCALE	NTS
GENERAL TOLERANCES (UNLESS SPECIFIED)	
ANGULAR TOL	± 3.0 °
4 PLACES	± 0.03
3 PLACES	± 0.03
2 PLACES	± 0.05
1 PLACE	± 0.1
0 PLACES	± 0.2
DRAFT WHERE APPLICABLE MUST REMAIN WITHIN DIMENSIONS	

CURRENT REV DESC: REMOVED OBSOLETED PART NUMBERS AS PER PCN#516673

EC NO: 850267
DRWN: SAMPRS 2026/01/27
CHK'D: GGA 2026/03/13
APPR: GGA 2026/03/13

INITIAL REVISION:
DRWN: KYHWANG 2020/03/04
APPR: SHOSHIKAWA 2020/04/13

THIRD ANGLE PROJECTION | DRAWING: A3-SIZE | SERIES: 503552

molex

0.4 MM PITCH BOARD-TO-BOARD CONNECTOR
HIGH RETENTION FORCE (HRF) 7S/7L
PLUG ASSY

PRODUCT CUSTOMER DRAWING

DOCUMENT NUMBER	DOC TYPE	DOC PART	REVISION
5035521000-SD	PSD	000	A1

MATERIAL NUMBER	CUSTOMER	SHEET NUMBER
SEE CHART	GENERAL	1 OF 2

DOCUMENT STATUS	P1	RELEASE DATE	2026/03/13 14:36:23

FORMAT: master-ib-prod-A3
REVISION: J1
DATE: 2021/05/01

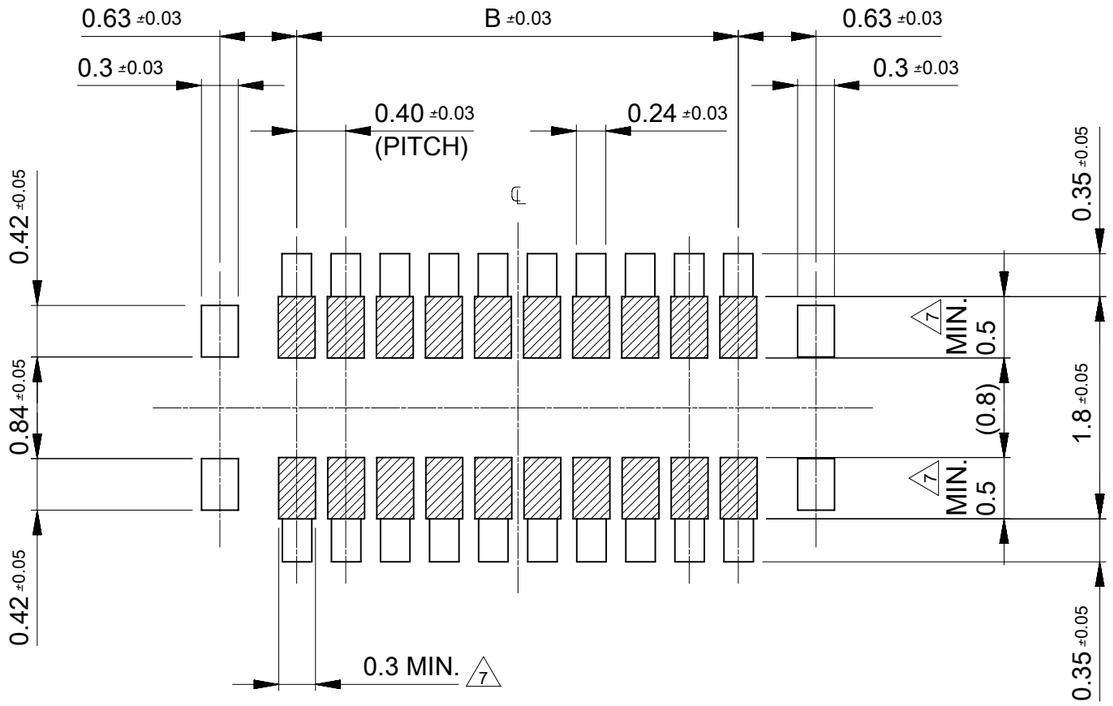

推奨基板レイアウト
RECOMMENDED P.W. BOARD PATTERN LAYOUT

△7 パターン引き回し、および半田禁止エリア
(当該箇所においては、これと接触する回路以外の配線を禁止する。
また、接する回路を配線する場合はレジストを施し、
この部分に半田は無き事)
PROHIBITED AREA OF PATTERN WIRING AND SOLDER.
(IT IS NOT ALLOWED FOR EACH THE AREA TO BE SOLDERED AND CONTACT THE OTHER WIRINGS WITHOUT ITSELF ONE.
IF THEY CONTACTED, RESIST TREATMENT SHOULD BE REQUIRED ON IT IN ORDER NOT TO CONTACT EACH OTHER.)

参考メタルマスク開口率 : 100%
REFERENCE SCREEN OPEN RATIO : 100%

参考メタルマスク厚さ
REFERENCE SCREEN THICKNESS
503552-**22 : t=0.08 mm
503308-**** : t=0.1 mm

THIS DRAWING CONTAINS INFORMATION THAT IS PROPRIETARY TO MOLEX ELECTRONIC TECHNOLOGIES, LLC AND SHOULD NOT BE USED WITHOUT WRITTEN PERMISSION

DIMENSION UNITS	SCALE
mm	NTS

GENERAL TOLERANCES (UNLESS SPECIFIED)

ANGULAR TOL	±	3.0 °
4 PLACES	±	0.03
3 PLACES	±	0.03
2 PLACES	±	0.05
1 PLACE	±	0.1
0 PLACES	±	0.2

DRAFT WHERE APPLICABLE MUST REMAIN WITHIN DIMENSIONS

CURRENT REV DESC: REMOVED OBSOLETED PART NUMBERS AS PER PCN#516673

EC NO: 850267
DRWN: SAMPRS 2026/01/27
CHK'D: GGA 2026/03/13
APPR: GGA 2026/03/13

INITIAL REVISION:
DRWN: KYHWANG 2020/03/04
APPR: SHOSHIKAWA 2020/04/13

molex

0.4 MM PITCH BOARD-TO-BOARD CONNECTOR
HIGH RETENTION FORCE (HRF) 7S/7L
PLUG ASSY

PRODUCT CUSTOMER DRAWING

DOCUMENT NUMBER	DOC TYPE	DOC PART	REVISION
5035521000-SD	PSD	000	A1

THIRD ANGLE PROJECTION	DRAWING	SERIES	MATERIAL NUMBER	CUSTOMER	SHEET NUMBER
	A3-SIZE	503552	SEE CHART	GENERAL	2 OF 2

DOCUMENT STATUS	P1	RELEASE DATE	2026/03/13 14:36:23

FORMAT: master-ib-prod-A3
REVISION: J1
DATE: 2021/05/01