uClamp0506T
Low Profile µClamp®
6-Line ESD Protection

PROTECTION PRODUCTS - MicroClamp®

Description

The µClamp® series of TVS arrays are designed to protect sensitive electronics from damage or latch-up due to ESD. It is designed to replace single line devices such as multilayer varistors (MLVs) in space constrained applications such as cell phones, notebook computers, and other portable electronics. It features large cross-sectional area junctions for conducting high transient currents. TVS diodes offer desirable characteristics for board level protection including fast response time, low operating and clamping voltage, and no device degradation.

The µClamp®0506T is in a 6-pin SLP1313P6T package. It measures 1.3 x 1.3 mm with a nominal height of only 0.4mm. The leads are spaced at a pitch of 0.4mm and are finished with lead-free NiPdAu. Each device features six TVS diodes with an operating voltage of 5 volts and a maximum loading capacitance of only 10pF.

They may be used to meet the ESD immunity requirements of IEC 61000-4-2, Level 4 (±15kV air, ±8kV contact discharge). The combination of small size and high ESD surge capability makes them ideal for use in portable applications such as cellular phones, digital cameras, and notebook computers.

Features

- Transient protection for data lines to
  IEC 61000-4-2 (ESD) ±15kV (air), ±8kV (contact)
  IEC 61000-4-4 (EFT) 40A (tp = 5/50ns)
  Cable Discharge Event (CDE)
- Ultra-small package
- Protects six data lines
- Low clamping voltage
- Working voltage: 5V
- Low capacitance (10pF)
- Solid-state silicon-avalanche technology

Mechanical Characteristics

- SLP1313P6T package
- Pb-Free, Halogen Free, RoHS/WEEE Compliant
- Nominal Dimensions: 1.3 x 1.3 x 0.4 mm
- Lead Finish: NiPdAu
- Molding compound flammability rating: UL 94V-0
- Marking : Marking code
- Packaging : Tape and Reel

Applications

- Cellular Handsets & Accessories
- Notebooks & Handhelds
- mp3 Players
- Cordless Phones
- Portable Instrumentation
- Digital Cameras
- Peripherals

Dimensions

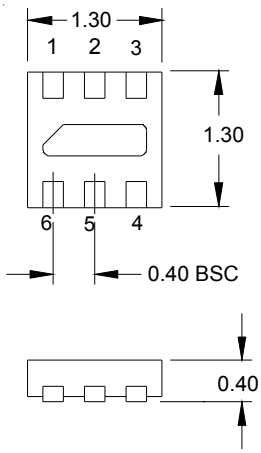

Nominal Dimensions (mm)
(SLP1313P6T Bottom View)

Schematic

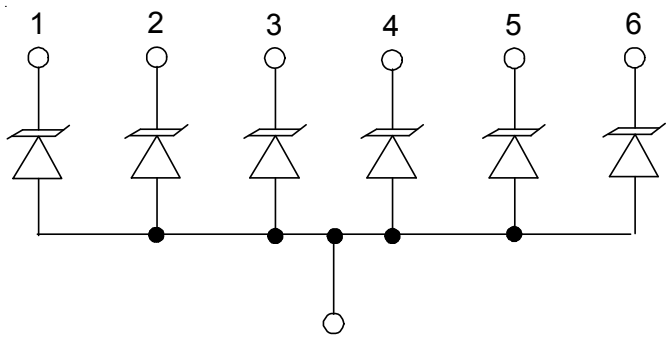

Absolute Maximum Rating

Rating	Symbol	Value	Units
Peak Pulse Power (tp = 8/20μs)	P_{pk}	25	Watts
Maximum Peak Pulse Current (tp = 8/20μs)	I_{pp}	2	Amps
ESD per IEC 61000-4-2 (Air) ESD per IEC 61000-4-2 (Contact)	V_{ESD}	+/- 20 +/- 15	kV
Operating Temperature	T_J	-55 to +125	°C
Storage Temperature	T_{STG}	-55 to +150	°C

Electrical Characteristics (T=25°C)

Parameter	Symbol	Conditions	Minimum	Typical	Maximum	Units
Reverse Stand-Off Voltage	V_{RWM}				5	V
Reverse Breakdown Voltage	V_{BR}	I_t = 1mA	6			V
Reverse Leakage Current	I_R	V_{RWM} = 5V, T=25°C			0.25	μA
Forward Voltage	V_F	I_F = 10mA		1	1.2	V
Clamping Voltage	V_C	I_{PP} = 2A, t_p = 8/20μs			12.5	V
Junction Capacitance	C_j	V_R = 0V, f = 1MHz			10	pF
Junction Capacitance	C_j	V_R = 3.3V, f = 1MHz		4.5		pF

Typical Characteristics

Non-Repetitive Peak Pulse Power vs. Pulse Time

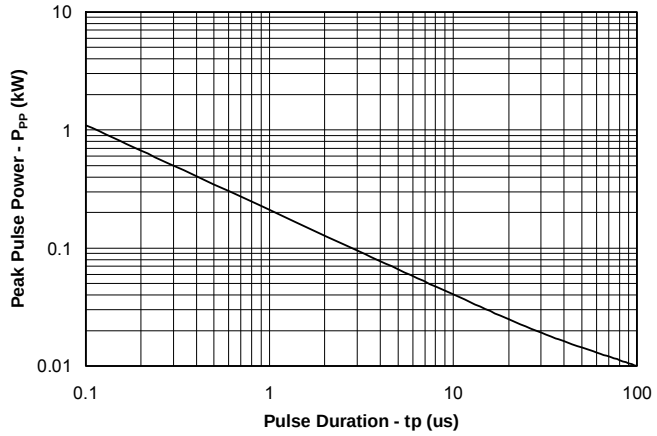

Power Derating Curve

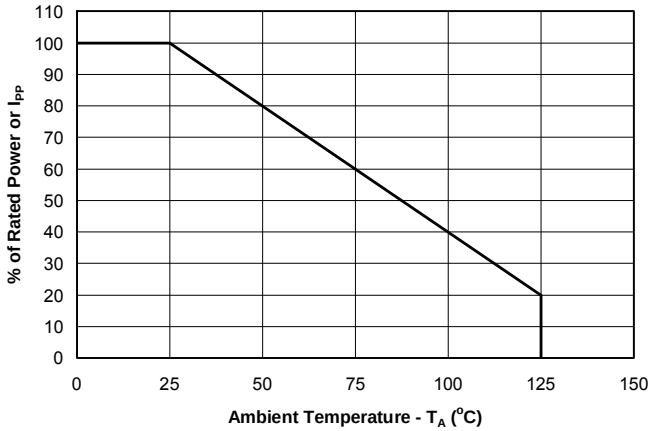

Clamping Voltage vs. Peak Pulse Current

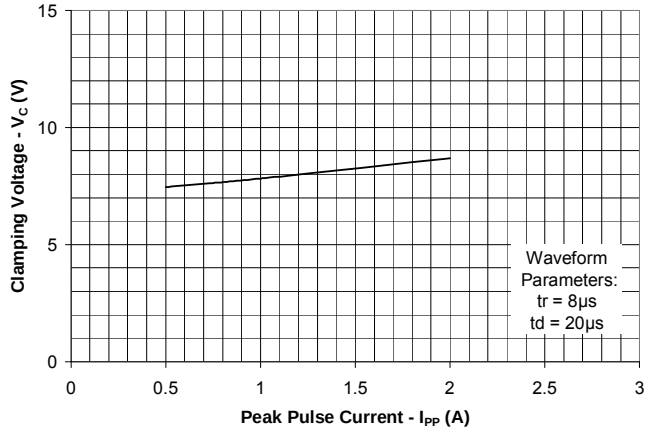

Forward Voltage vs. Forward Current

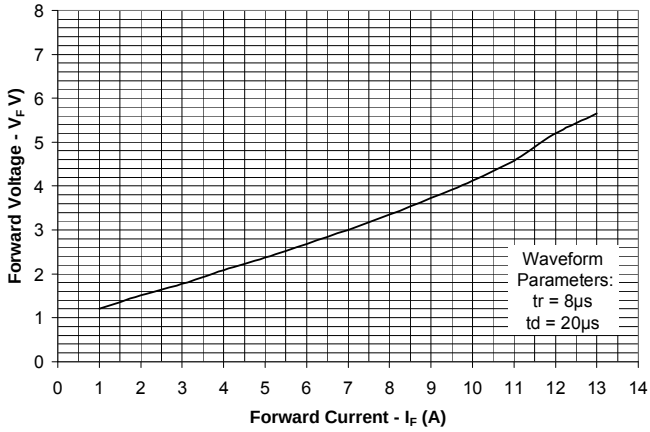

Junction Capacitance vs. Reverse Voltage

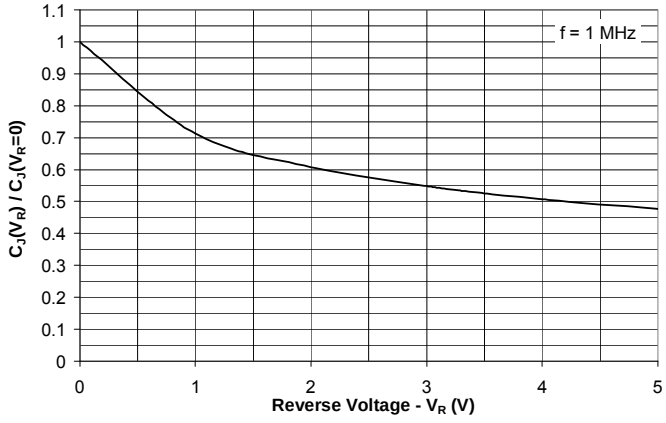

ESD Clamping (8kV Contact per IEC 61000-4-2)

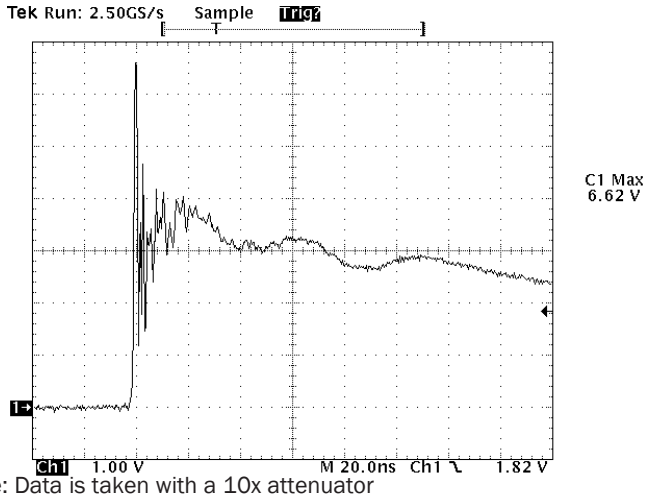

Note: Data is taken with a 10x attenuator

Applications Information

Device Connection Options

This device is designed to protect six data lines. The device is unidirectional and may be used on lines where the signal polarity is above ground.

Circuit Board Layout Recommendations for Suppression of ESD.

Good circuit board layout is critical for the suppression of ESD induced transients. The following guidelines are recommended:

- Place the TVS near the input terminals or connectors to restrict transient coupling.
- Minimize the path length between the TVS and the protected line.
- Minimize all conductive loops including power and ground loops.
- The ESD transient return path to ground should be kept as short as possible.
- Never run critical signals near board edges.
- Use ground planes whenever possible.

Circuit Diagram

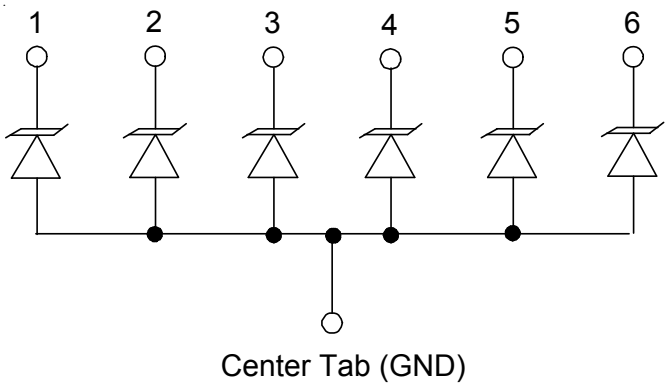

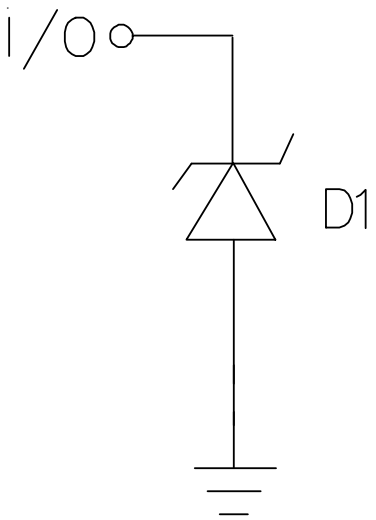

uClamp0506T Spice Model

uClamp0506T Spice Parameters		
Parameter	**Unit**	**D1 (TVS)**
IS	Amp	2.05e-15
BV	Volt	7.0
VJ	Volt	0.80
RS	Ohm	0.75
IBV	Amp	1.0E-3
CJO	Farad	9e-12
TT	sec	2.541E-9
M	--	0.25
N	--	1.1
EG	eV	1.11

Outline Drawing - SLP1313P6T

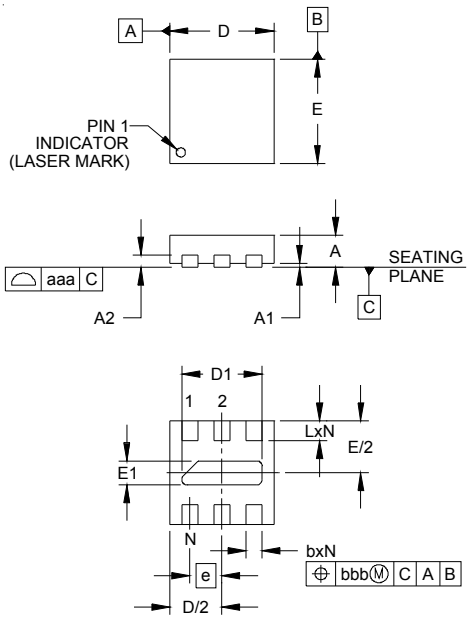

DIM	DIMENSIONS					
	INCHES			MILLIMETERS		
	MIN	NOM	MAX	MIN	NOM	MAX
A	.015	.016	.017	0.37	0.40	0.43
A1	0.00	.001	.002	0.00	0.03	0.05
A2		(.005)			(0.13)	
b	.006	.008	.010	0.15	0.20	0.25
D	.047	.051	.055	1.20	1.30	1.40
D1	.035	.039	.043	0.90	1.00	1.10
E	.047	.051	.055	1.20	1.30	1.40
E1	.008	.012	.016	0.20	0.30	0.40
e	.016 BSC			0.40 BSC		
L	.008	.010	.012	0.20	0.25	0.30
N	6			6		
aaa	.003			0.08		
bbb	.004			0.10		

NOTES:
1. CONTROLLING DIMENSIONS ARE IN MILLIMETERS (ANGLES IN DEGREES).
2. COPLANARITY APPLIES TO THE EXPOSED PAD AS WELL AS THE TERMINALS.

Land Pattern - SLP1313P6T

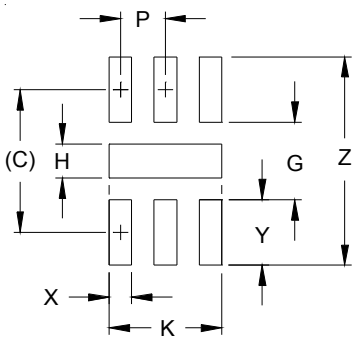

DIM	DIMENSIONS	
	INCHES	MILLIMETERS
C	(.050)	(1.27)
G	.027	0.69
H	.012	0.30
K	.039	1.00
P	.016	0.40
X	.008	0.20
Y	.023	0.58
Z	.073	1.85

NOTES:
1. CONTROLLING DIMENSIONS ARE IN MILLIMETERS (ANGLES IN DEGREES).
2. THIS LAND PATTERN IS FOR REFERENCE PURPOSES ONLY. CONSULT YOUR MANUFACTURING GROUP TO ENSURE YOUR COMPANY'S MANUFACTURING GUIDELINES ARE MET.
3. THERMAL VIAS IN THE LAND PATTERN OF THE EXPOSED PAD SHALL BE CONNECTED TO A SYSTEM GROUND PLANE. FAILURE TO DO SO MAY COMPROMISE THE THERMAL AND/OR FUNCTIONAL PERFORMANCE OF THE DEVICE.

Marking Code

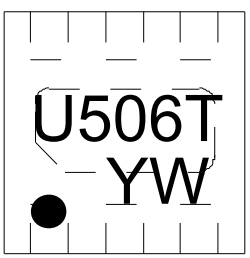

YW = Date Code

Ordering Information

Part Number	Working Voltage	Qty per Reel	Reel Size
uClamp0506T.TCT	5V	3,000	7 Inch

Notes:
1) This is a lead-free, RoHS/WEEE compliant product
MicroClamp, uClamp and µClamp are marks of Semtech Corporation

Tape and Reel Specification

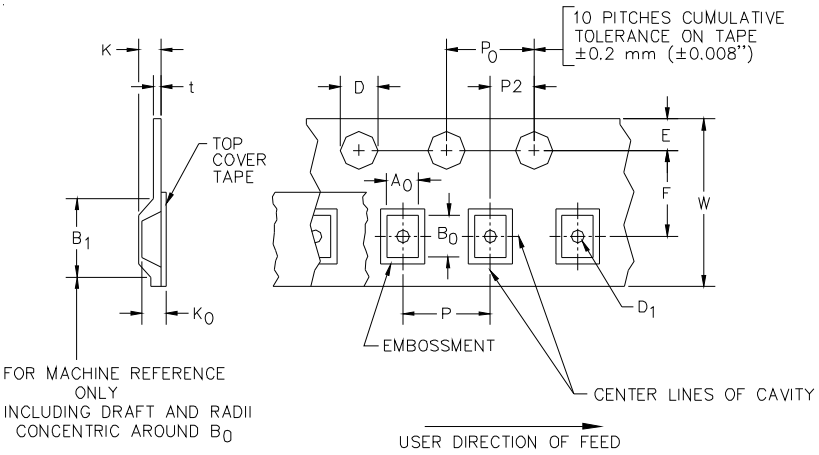

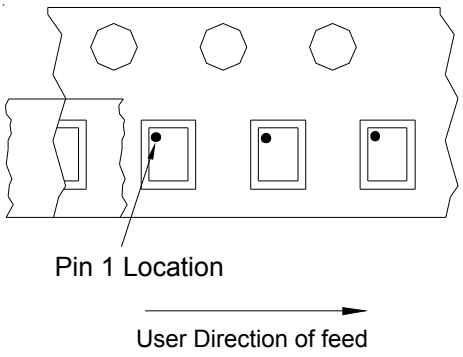

Device Orientation in Tape

A0	B0	K0
1.51 +/-0.05 mm	1.51 +/-0.05 mm	0.56 +/-0.05 mm

Tape Width	B, (Max)	D	D1	E	F	K (MAX)	P	P0	P2	T(MAX)	W
8 mm	4.2 mm (.165)	1.5 + 0.1 mm - 0.0 mm (0.59 +.005 - .000)	0.8 mm ±0.05 (.031)	1.750±.10 mm (.069±.004)	3.5±0.05 mm (.138±.002)	2.4 mm (.094)	4.0±0.1 mm (.157±.00-4)	4.0±0.1 mm (.157±.00-4)	2.0±0.05m-m (.079±.002)	0.4 mm (.016)	8.0 mm + 0.3 mm - 0.1 mm (.312±.012)

Contact Information

Semtech Corporation
Protection Products Division
200 Flynn Rd., Camarillo, CA 93012
Phone: (805)498-2111 FAX (805)498-3804