

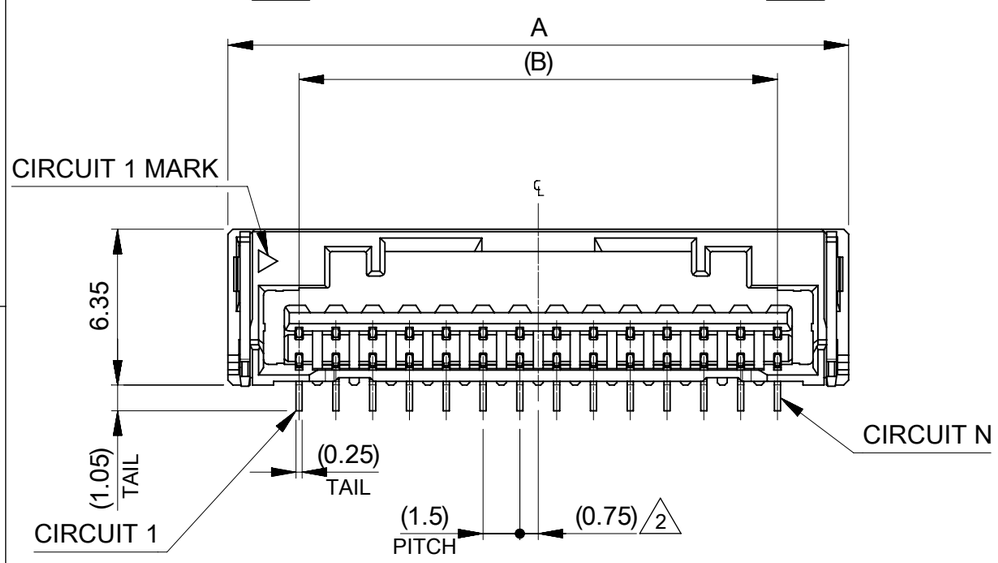

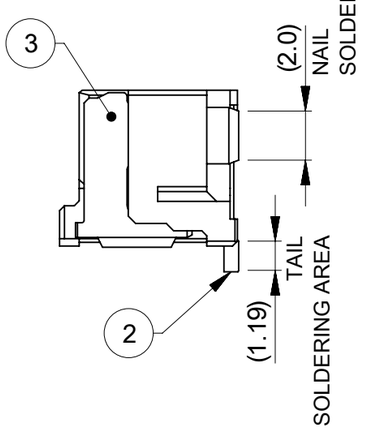

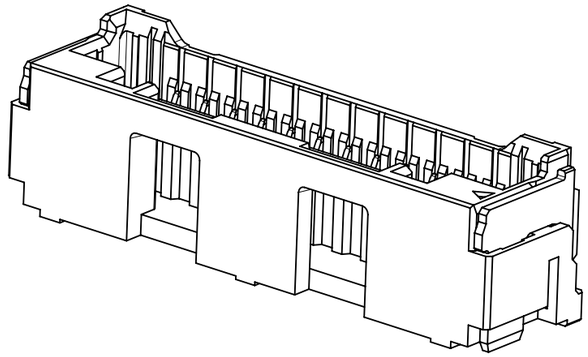

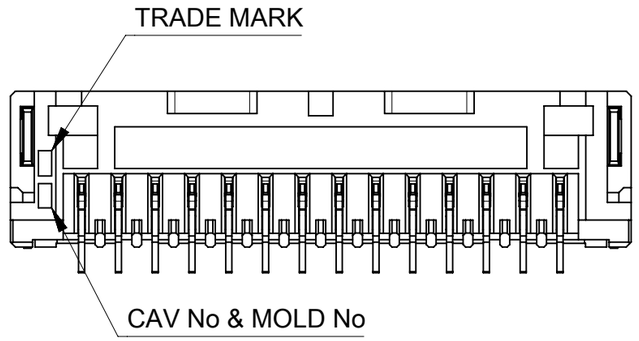

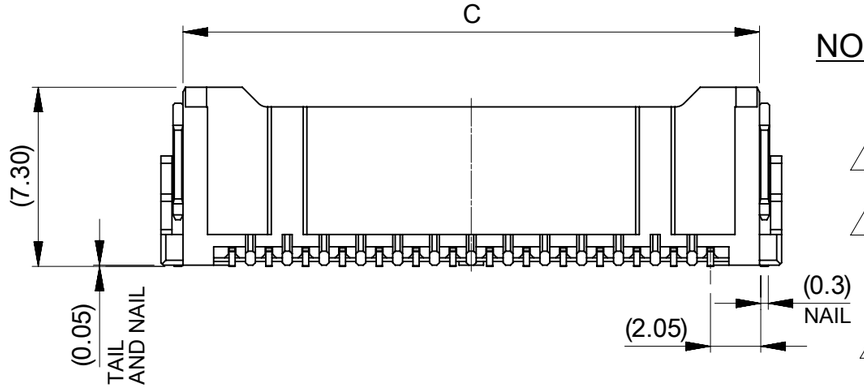

NOTES

1. 端子テール部及びネイルの平坦度:0.1 MAX.
2. TAIL AND NAIL COPLANARITY TO BE 0.1 MAX.
   極数/2 = 偶数に適用
3. APPLY FOR CIRCUIT SIZE / 2 =EVEN
   適用製品及び各種仕様書はSHEET 5を参照のこと
   REFER TO SHEET 5 ABOUT APPLICABLE PRODUCTS AND VARIOUS SPECIFICATIONS.
4. オーダー番号(製品番号)：SHEET 6の製品一覧を参照ください
   ORDER No (MATERIAL No)： REFER TO SHEET 6 FOR PRODUCT LIST

502584 ****

- 502584: シリーズ番号 / SERIES NO
- 極数 / CIRCUIT SIZE
- 色 / COLOR
- カバーテープ / COVER TAPE

番号 NO.	部品 PART	材質 MATERIAL
①	ハウジング HOUSING	ポリアミド(PA) UL94V-0 色：SEE CHART POLYAMIDE(PA) UL94V-0 COLOR : SEE CHART
②	ターミナル TERMINAL	銅合金 COPPER ALLOY
		錫めっき ： 1.0 micro-meter MIN MATTE TIN PLATING
		ニッケルめっき(下地)：1.0 micro-meter MIN NICKEL (UNDER PLATING)
③	ネイル NAIL	黄銅 BRASS
		錫めっき ： 1.0 micro-meter MIN MATTE TIN PLATING
		ニッケルめっき(下地)：1.0 micro-meter MIN NICKEL (UNDER PLATING)

CIRCUIT	No	COVER TAPE	No	COLOR	No	COLOR
02 ~ 15	6	WITH	0	ナチュラル NATURAL (ベージュ) (BEIGE)	5	桃 PINK
			1	黒 BLACK	6	緑 GREEN
	7	WITHOUT	2	赤 RED	7	茶 BROWN
			3	黄 YELLOW	8	橙 ORANGE
			4	青 BLUE	9	紫 VIOLET

C		B	A		極数 CIRCUIT NO
25	±0.25	21	26.8	±0.25	15
23.5		19.5	25.3		14
22		18	23.8		13
20.5		16.5	22.3		12
19		15	20.8		11
17.5		13.5	19.3		10
16		12	17.8		9
14.5		10.5	16.3		8
13		9	14.8		7
11.5		7.5	13.3		6
10		6	11.8		5
8.5	(±0.20)	4.5	10.3	(±0.20)	4
7		3	8.8		3
5.5		1.5	7.3		2

THIS DRAWING CONTAINS INFORMATION THAT IS PROPRIETARY TO MOLEX ELECTRONIC TECHNOLOGIES, LLC AND SHOULD NOT BE USED WITHOUT WRITTEN PERMISSION

DIMENSION UNITS: mm | SCALE: NTS
GENERAL TOLERANCES (UNLESS SPECIFIED)
ANGULAR TOL ± 3.0 °
4 PLACES ± 0.2
3 PLACES ± 0.2
2 PLACES ± 0.2
1 PLACE ± 0.2
0 PLACES ± 0.2
DRAFT WHERE APPLICABLE MUST REMAIN WITHIN DIMENSIONS

CURRENT REV DESC:

EC NO: 820193
DRWN: RSATO 2025/04/24
CHK'D: SAKIYAMA 2025/04/28
APPR: AIDA 2025/04/28
INITIAL REVISION:
DRWN: AISHIKAWA 2018/03/16
APPR: KOMURAKAMI 2020/03/03

THIRD ANGLE PROJECTION | DRAWING: A3-SIZE | SERIES: 502584

molex

CLIK-MATE 1.5
SINGLE ROW SMT VT TYPE REC ASSY
TIN PLATING

PRODUCT CUSTOMER DRAWING

DOCUMENT NUMBER	DOC TYPE	DOC PART	REVISION
5025840000-SD	PSD	000	D

MATERIAL NUMBER	CUSTOMER	SHEET NUMBER
	GENERAL	1 OF 6

DOCUMENT STATUS	P1	RELEASE DATE	2025/04/28 04:09:35

FORMAT: master-tb-prod-A3
REVISION: J
DATE: 2020/01/14

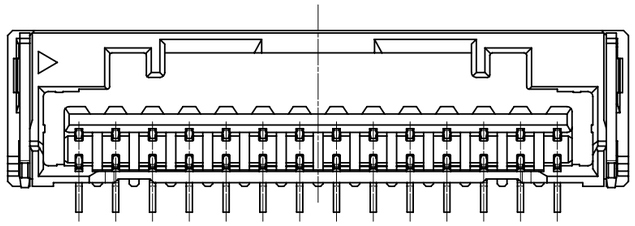

製品レイアウト
PRODUCT LAYOUT

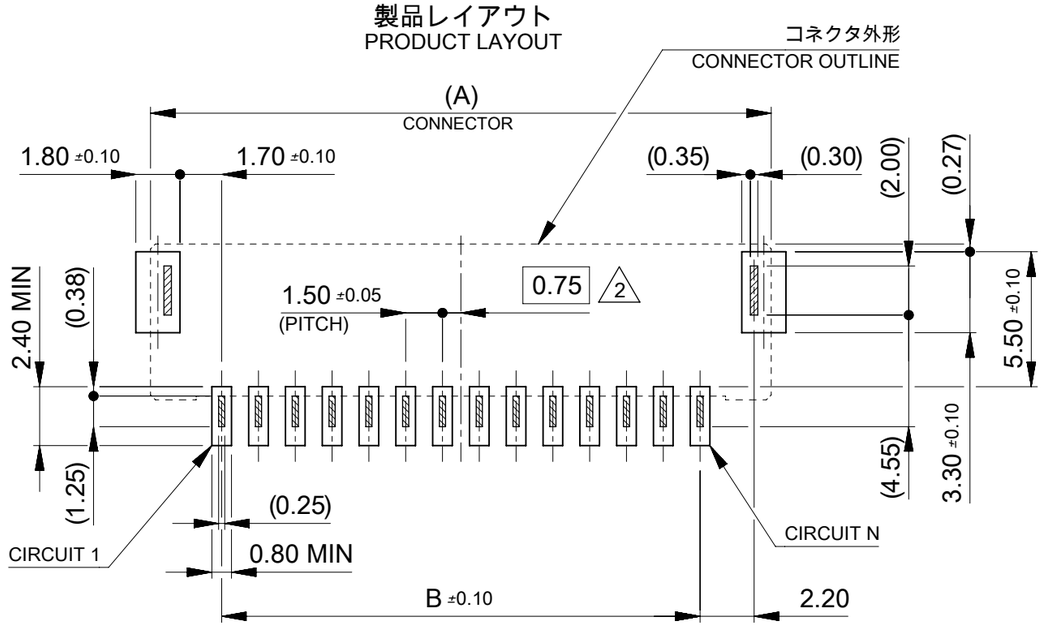

基板レイアウト(参考)
PCB PATTERN LAYOUT (REFERENCE)
(参考：メタルマスク厚さ 0.10mm, マスク開口率100%)
(REFERENCE:METAL STENCIL THICKNESS 0.10mm, APERTURE RATIO 100%)

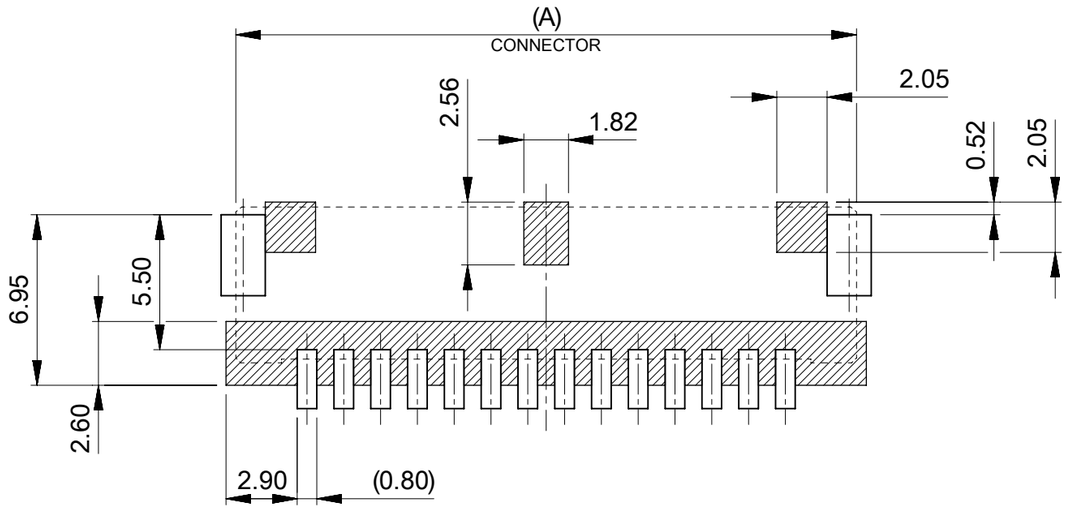

パターン非推奨エリア

パターンを引き回す際は、製品機能に影響がないことをご確認ください。
PATTERN IS NOT RECCOMENDED ON THE HATCHED AREA.
PLEASE CHECK NOT TO HAVE PROBLEM FOR PRODUCT FUNCTION
WHEN SETTING PATTERN ON THE HATCHED AREA.

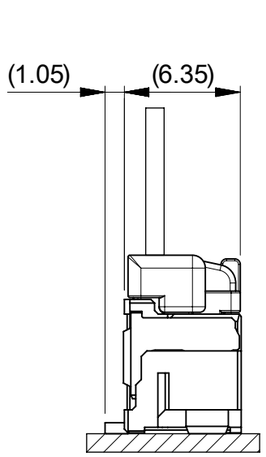

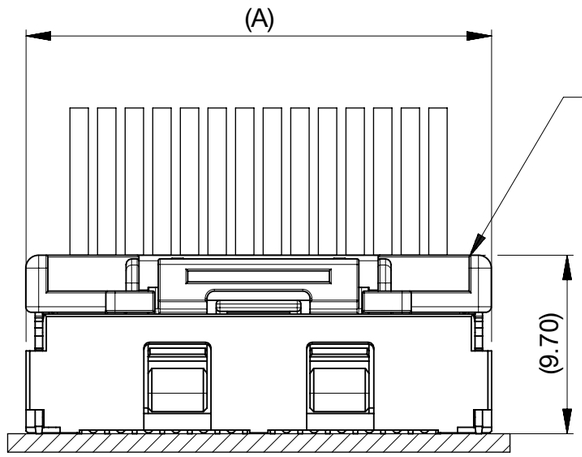

嵌合図
MATED CONNECTORS

THIS DRAWING CONTAINS INFORMATION THAT IS PROPRIETARY TO MOLEX ELECTRONIC TECHNOLOGIES, LLC AND SHOULD NOT BE USED WITHOUT WRITTEN PERMISSION

DIMENSION UNITS	SCALE
mm	NTS

GENERAL TOLERANCES (UNLESS SPECIFIED)		
ANGULAR TOL	±	3.0 °
4 PLACES	±	0.2
3 PLACES	±	0.2
2 PLACES	±	0.2
1 PLACE	±	0.2
0 PLACES	±	0.2

DRAFT WHERE APPLICABLE MUST REMAIN WITHIN DIMENSIONS

CURRENT REV DESC:

EC NO: 820193
DRWN: RSATO 2025/04/24
CHK'D: SAKIYAMA 2025/04/28
APPR: AIDA 2025/04/28

INITIAL REVISION:
DRWN: AISHIKAWA 2018/03/16
APPR: KOMURAKAMI 2020/03/03

molex

CLIK-MATE 1.5
SINGLE ROW SMT VT TYPE REC ASSY
TIN PLATING

PRODUCT CUSTOMER DRAWING

DOCUMENT NUMBER	DOC TYPE	DOC PART	REVISION
5025840000-SD	PSD	000	D

THIRD ANGLE PROJECTION	DRAWING	SERIES	MATERIAL NUMBER	CUSTOMER	SHEET NUMBER
	A3-SIZE	502584		GENERAL	2 OF 6

DOCUMENT STATUS	P1	RELEASE DATE	2025/04/28 04:09:35

FORMAT: master-lb-prod-A3
REVISION: J
DATE: 2020/01/14

ロック形状および吸着エリア
LOCK SHAPE AND VACCUME AREA

WITHOUT COVER TAPE
MATERIAL No. : 502584 **7*

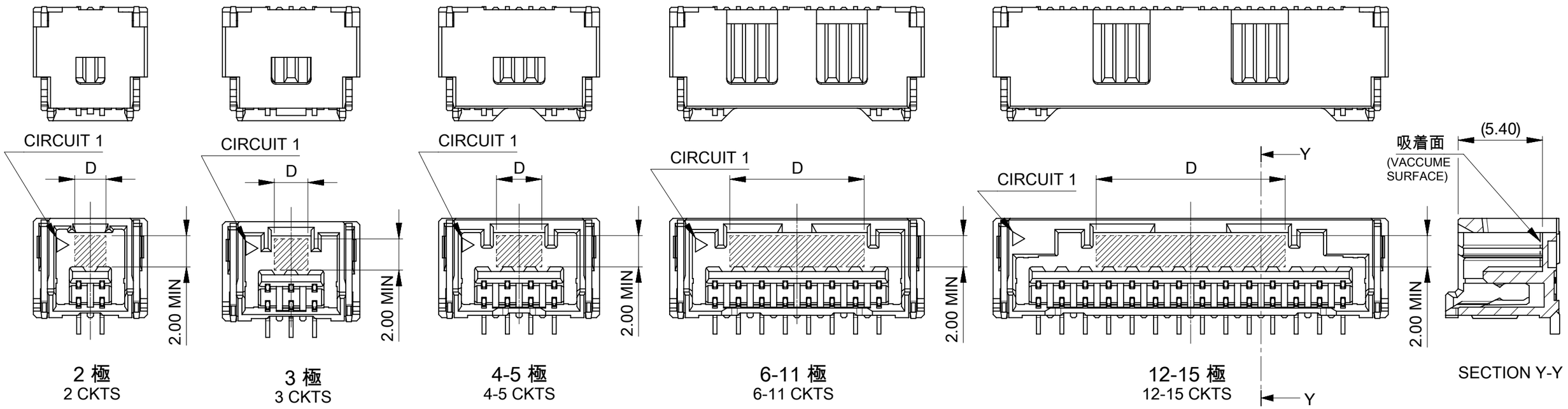

2 極
2 CKTS

3 極
3 CKTS

4-5 極
4-5 CKTS

6-11 極
6-11 CKTS

12-15 極
12-15 CKTS

SECTION Y-Y

WITH COVER TAPE
MATERIAL No. : 502584 **6*

ロック形状はカバーテープなし(502584 **7*)と共通

LOCK SHAPE IS SAME AS THAT WITHOUT COVER TAPE (502584 **7*)

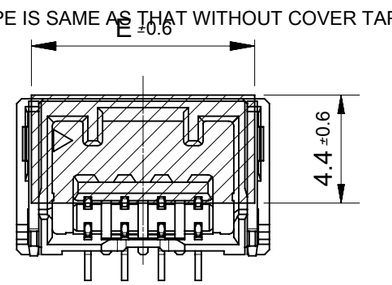

2-7 極
2-7 CKTS

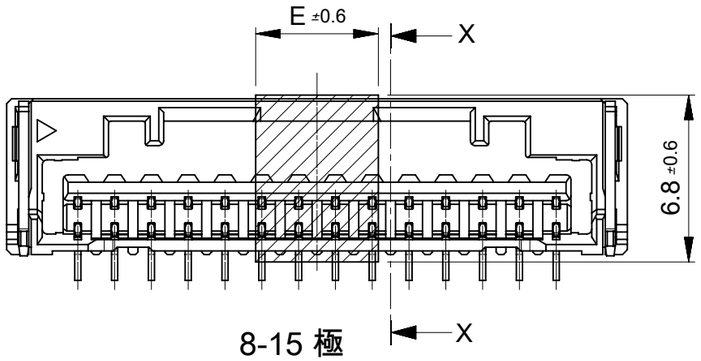

8-15 極
8-15 CKTS

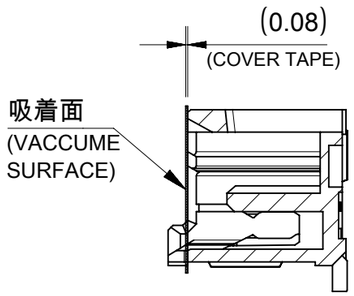

SECTION X-X

E	D	極数 CIRCUIT NO
5.0	12.1	15
		14
		13
		12
		11
	10.1	10
		9
	8.6	8
13.6	7.1	7
12.1	6.2	6
10.6	3.2	5
9.1	2.9	4
7.6	2.15	3
6.1	2.0	2

THIS DRAWING CONTAINS INFORMATION THAT IS PROPRIETARY TO MOLEX ELECTRONIC TECHNOLOGIES, LLC AND SHOULD NOT BE USED WITHOUT WRITTEN PERMISSION

DIMENSION UNITS	mm
SCALE	NTS
GENERAL TOLERANCES (UNLESS SPECIFIED)	
ANGULAR TOL ±	3.0 °
4 PLACES ±	0.2
3 PLACES ±	0.2
2 PLACES ±	0.2
1 PLACE ±	0.2
0 PLACES ±	0.2
DRAFT WHERE APPLICABLE MUST REMAIN WITHIN DIMENSIONS	

CURRENT REV DESC:

EC NO: 820193
DRWN: RSATO 2025/04/24
CHK'D: SAKIYAMA 2025/04/28
APPR: AIDA 2025/04/28

INITIAL REVISION:
DRWN: AISHIKAWA 2018/03/16
APPR: KOMURAKAMI 2020/03/03

THIRD ANGLE PROJECTION | DRAWING: A3-SIZE | SERIES: 502584

molex

CLIK-MATE 1.5
SINGLE ROW SMT VT TYPE REC ASSY
TIN PLATING

PRODUCT CUSTOMER DRAWING

DOCUMENT NUMBER	DOC TYPE	DOC PART	REVISION
5025840000-SD	PSD	000	D

MATERIAL NUMBER	CUSTOMER	SHEET NUMBER
	GENERAL	3 OF 6

DOCUMENT STATUS	P1	RELEASE DATE	2025/04/28 04:09:35

FORMAT: master-tb-prod-A3
REVISION: J
DATE: 2020/01/14

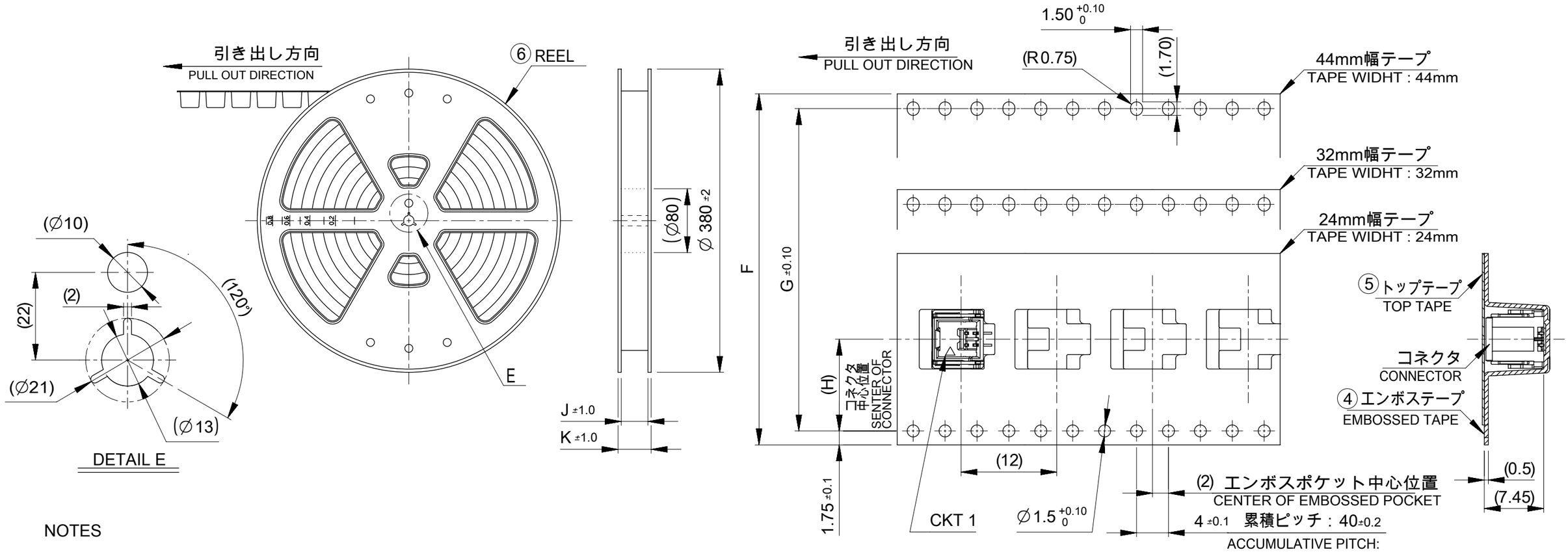

NOTES

5. 梱包数量 : 900個/リール
   NUMBER OF CONNECTORS : 900 PIECES/REEL
6. リードテープ長さ
   LEAD TAPE LENGTH

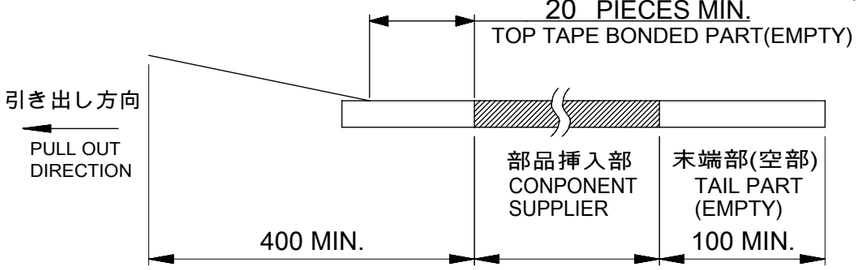

7. トップテープの剥離強度はJIS C0806-3に準拠
   TOP TAPE PEELING FORCE IS DEFINED BY JIS C0806-3.
8. 本製品は乾燥剤入り、ハイバリア梱包である
   THIS PRODUCT IS DELIVERD IN HIGH BARRIER PACKAGE WITH DESICCANT.

番号 NO.	部品 PART	材質 MATERIAL
④	エンボステープ EMBOSSED TAPE	ポリスチレン(PS) POLYSTYRENE(PS)
⑤	トップテープ TOP TAPE	ポリエチレン、ポリエチレンテレフタレート POLYETHLENE(PE), POLYETHYLENE TEREPHTHALATE(PET)
⑥	リール REEL	ポリスチレン(PS) <リサイクル材を含む> POLYSTYRENE(PS) <RECYCLE MATERIAL CONTAINED>

K	J	H	G	エンボステープ幅F WIDTH OF TAPE	極数 CIRCUIT NO
49.4	45.4	20.2	40.4	44±0.3	15
					14
					13
					12
					11
					10
37.4	33.4	14.2	28.4	32±0.3	9
					8
					7
					6
29.4	25.4	11.5	-	24 +0.3 -0.1	5
					4
					3
					2

THIS DRAWING CONTAINS INFORMATION THAT IS PROPRIETARY TO MOLEX ELECTRONIC TECHNOLOGIES, LLC AND SHOULD NOT BE USED WITHOUT WRITTEN PERMISSION

DIMENSION UNITS	mm
SCALE	NTS
GENERAL TOLERANCES (UNLESS SPECIFIED)	
ANGULAR TOL	± 3.0 °
4 PLACES	± 0.2
3 PLACES	± 0.2
2 PLACES	± 0.2
1 PLACE	± 0.2
0 PLACES	± 0.2
DRAFT WHERE APPLICABLE MUST REMAIN WITHIN DIMENSIONS	

CURRENT REV DESC:

EC NO: 820193
DRWN: RSATO 2025/04/24
CHK'D: SAKIYAMA 2025/04/28
APPR: AIDA 2025/04/28

INITIAL REVISION:
DRWN: AISHIKAWA 2018/03/16
APPR: KOMURAKAMI 2020/03/03

THIRD ANGLE PROJECTION | DRAWING: A3-SIZE | SERIES: 502584

molex

CLIK-MATE 1.5
SINGLE ROW SMT VT TYPE REC ASSY
TIN PLATING

PRODUCT CUSTOMER DRAWING

DOCUMENT NUMBER	DOC TYPE	DOC PART	REVISION
5025840000-SD	PSD	000	D

MATERIAL NUMBER	CUSTOMER	SHEET NUMBER
	GENERAL	4 OF 6

DOCUMENT STATUS	P1	RELEASE DATE	2025/04/28 04:09:35

FORMAT: master-tb-prod-A3
REVISION: J
DATE: 2020/01/14

△3 適用製品及び各種仕様書
APPLICABLE PRODUCTS AND VARIOUS SPECIFICATIONS

	PART NUMBER	DOCUMENT NUMBER
梱包仕様書 PACKAGING SPECIFICATION	502584 **7* 502584 **6*	SPK-502584-001

適用嵌合相手 MATE WITH	HOUSING	TERMINAL (TIN PLATING)	
		#24-28	#28-30
シリーズ番号 SERIES NUMBER	502578	502579 0000	503429 0000
製品仕様書 PRODUCT SPECIFICATION	5025780000-PS		
アプリケーション仕様書 APPLICATION SPECIFICATION	AS-502578-001		

THIS DRAWING CONTAINS INFORMATION THAT IS PROPRIETARY TO MOLEX ELECTRONIC TECHNOLOGIES, LLC AND SHOULD NOT BE USED WITHOUT WRITTEN PERMISSION

DIMENSION UNITS	SCALE
mm	NTS

GENERAL TOLERANCES (UNLESS SPECIFIED)

ANGULAR TOL	±	3.0 °
4 PLACES	±	0.2
3 PLACES	±	0.2
2 PLACES	±	0.2
1 PLACE	±	0.2
0 PLACES	±	0.2

DRAFT WHERE APPLICABLE MUST REMAIN WITHIN DIMENSIONS

CURRENT REV DESC:

EC NO: 820193
DRWN: RSATO 2025/04/24
CHK'D: SAKIYAMA 2025/04/28
APPR: AIDA 2025/04/28

INITIAL REVISION:
DRWN: AISHIKAWA 2018/03/16
APPR: KOMURAKAMI 2020/03/03

molex

CLIK-MATE 1.5
SINGLE ROW SMT VT TYPE REC ASSY
TIN PLATING

PRODUCT CUSTOMER DRAWING

DOCUMENT NUMBER	DOC TYPE	DOC PART	REVISION
5025840000-SD	PSD	000	D

THIRD ANGLE PROJECTION	DRAWING	SERIES	MATERIAL NUMBER	CUSTOMER	SHEET NUMBER
	A3-SIZE	502584		GENERAL	5 OF 6

DOCUMENT STATUS	P1	RELEASE DATE	2025/04/28 04:09:35

FORMAT: master-lb-prod-A3
REVISION: J
DATE: 2020/01/14

△4 製品一覧 PRODUCT LIST

HOUSING COLOR : BLUE		HOUSING COLOR : YELLOW		HOUSING COLOR : RED		HOUSING COLOR : BLACK		HOUSING COLOR : NATURAL (BEIGE)		
WITHOUT COVER TAPE	WITH COVER TAPE	WITHOUT COVER TAPE	WITH COVER TAPE	WITHOUT COVER TAPE	WITH COVER TAPE	WITHOUT COVER TAPE	WITH COVER TAPE	WITHOUT COVER TAPE	WITH COVER TAPE	
502584 1574	502584 1564	502584 1573	502584 1563	502584 1572	502584 1562	502584 1571	502584 1561	502584 1570	502584 1560	15
502584 1474	502584 1464	502584 1473	502584 1463	502584 1472	502584 1462	502584 1471	502584 1461	502584 1470	502584 1460	14
502584 1374	502584 1364	502584 1373	502584 1363	502584 1372	502584 1362	502584 1371	502584 1361	502584 1370	502584 1360	13
502584 1274	502584 1264	502584 1273	502584 1263	502584 1272	502584 1262	502584 1271	502584 1261	502584 1270	502584 1260	12
502584 1174	502584 1164	502584 1173	502584 1163	502584 1172	502584 1162	502584 1171	502584 1161	502584 1170	502584 1160	11
502584 1074	502584 1064	502584 1073	502584 1063	502584 1072	502584 1062	502584 1071	502584 1061	502584 1070	502584 1060	10
502584 0974	502584 0964	502584 0973	502584 0963	502584 0972	502584 0962	502584 0971	502584 0961	502584 0970	502584 0960	9
502584 0874	502584 0864	502584 0873	502584 0863	502584 0872	502584 0862	502584 0871	502584 0861	502584 0870	502584 0860	8
502584 0774	502584 0764	502584 0773	502584 0763	502584 0772	502584 0762	502584 0771	502584 0761	502584 0770	502584 0760	7
502584 0674	502584 0664	502584 0673	502584 0663	502584 0672	502584 0662	502584 0671	502584 0661	502584 0670	502584 0660	6
502584 0574	502584 0564	502584 0573	502584 0563	502584 0572	502584 0562	502584 0571	502584 0561	502584 0570	502584 0560	5
502584 0474	502584 0464	502584 0473	502584 0463	502584 0472	502584 0462	502584 0471	502584 0461	502584 0470	502584 0460	4
502584 0374	502584 0364	502584 0373	502584 0363	502584 0372	502584 0362	502584 0371	502584 0361	502584 0370	502584 0360	3
502584 0274	502584 0264	502584 0273	502584 0263	502584 0272	502584 0262	502584 0271	502584 0261	502584 0270	502584 0260	2
オーダー番号 ORDER No										極数 CIRCUIT

HOUSING COLOR : VIOLET		HOUSING COLOR : ORANGE		HOUSING COLOR : BROWN		HOUSING COLOR : GREEN		HOUSING COLOR : PINK		
WITHOUT COVER TAPE	WITH COVER TAPE	WITHOUT COVER TAPE	WITH COVER TAPE	WITHOUT COVER TAPE	WITH COVER TAPE	WITHOUT COVER TAPE	WITH COVER TAPE	WITHOUT COVER TAPE	WITH COVER TAPE	
502584 1579	502584 1569	502584 1578	502584 1568	502584 1577	502584 1567	502584 1576	502584 1566	502584 1575	502584 1565	15
502584 1479	502584 1469	502584 1478	502584 1468	502584 1477	502584 1467	502584 1476	502584 1466	502584 1475	502584 1465	14
502584 1379	502584 1369	502584 1378	502584 1368	502584 1377	502584 1367	502584 1376	502584 1366	502584 1375	502584 1365	13
502584 1279	502584 1269	502584 1278	502584 1268	502584 1277	502584 1267	502584 1276	502584 1266	502584 1275	502584 1265	12
502584 1179	502584 1169	502584 1178	502584 1168	502584 1177	502584 1167	502584 1176	502584 1166	502584 1175	502584 1165	11
502584 1079	502584 1069	502584 1078	502584 1068	502584 1077	502584 1067	502584 1076	502584 1066	502584 1075	502584 1065	10
502584 0979	502584 0969	502584 0978	502584 0968	502584 0977	502584 0967	502584 0976	502584 0966	502584 0975	502584 0965	9
502584 0879	502584 0869	502584 0878	502584 0868	502584 0877	502584 0867	502584 0876	502584 0866	502584 0875	502584 0865	8
502584 0779	502584 0769	502584 0778	502584 0768	502584 0777	502584 0767	502584 0776	502584 0766	502584 0775	502584 0765	7
502584 0679	502584 0669	502584 0678	502584 0668	502584 0677	502584 0667	502584 0676	502584 0666	502584 0675	502584 0665	6
502584 0579	502584 0569	502584 0578	502584 0568	502584 0577	502584 0567	502584 0576	502584 0566	502584 0575	502584 0565	5
502584 0479	502584 0469	502584 0478	502584 0468	502584 0477	502584 0467	502584 0476	502584 0466	502584 0475	502584 0465	4
502584 0379	502584 0369	502584 0378	502584 0368	502584 0377	502584 0367	502584 0376	502584 0366	502584 0375	502584 0365	3
502584 0279	502584 0269	502584 0278	502584 0268	502584 0277	502584 0267	502584 0276	502584 0266	502584 0275	502584 0265	2
オーダー番号 ORDER No										極数 CIRCUIT

THIS DRAWING CONTAINS INFORMATION THAT IS PROPRIETARY TO MOLEX ELECTRONIC TECHNOLOGIES, LLC AND SHOULD NOT BE USED WITHOUT WRITTEN PERMISSION

DIMENSION UNITS	SCALE
mm	NTS

GENERAL TOLERANCES (UNLESS SPECIFIED)

ANGULAR TOL	±	3.0 °
4 PLACES	±	0.2
3 PLACES	±	0.2
2 PLACES	±	0.2
1 PLACE	±	0.2
0 PLACES	±	0.2

DRAFT WHERE APPLICABLE MUST REMAIN WITHIN DIMENSIONS

CURRENT REV DESC:

EC NO: 820193
DRWN: RSATO 2025/04/24
CHK'D: SAKIYAMA 2025/04/28
APPR: AIDA 2025/04/28

INITIAL REVISION:
DRWN: AISHIKAWA 2018/03/16
APPR: KOMURAKAMI 2020/03/03

THIRD ANGLE PROJECTION | DRAWING: A3-SIZE | SERIES: 502584

molex

CLIK-MATE 1.5
SINGLE ROW SMT VT TYPE REC ASSY
TIN PLATING

PRODUCT CUSTOMER DRAWING

DOCUMENT NUMBER	DOC TYPE	DOC PART	REVISION
5025840000-SD	PSD	000	D

MATERIAL NUMBER	CUSTOMER	SHEET NUMBER
	GENERAL	6 OF 6

DOCUMENT STATUS	P1	RELEASE DATE	2025/04/28 04:09:35

FORMAT: master-lb-prod-A3
REVISION: J
DATE: 2020/01/14