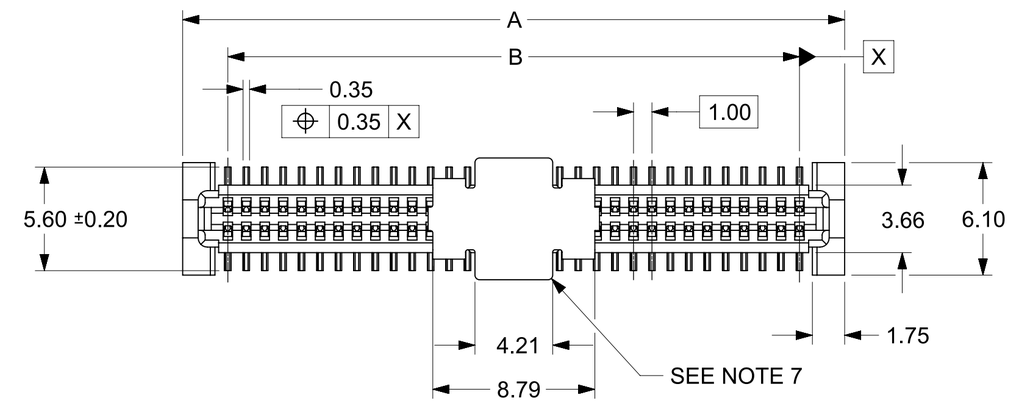

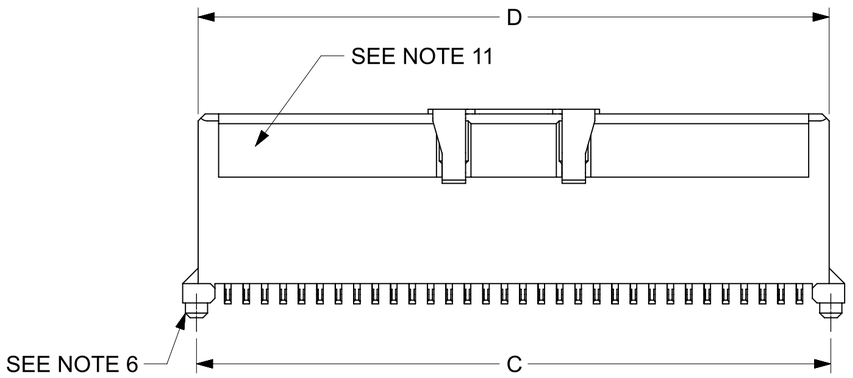

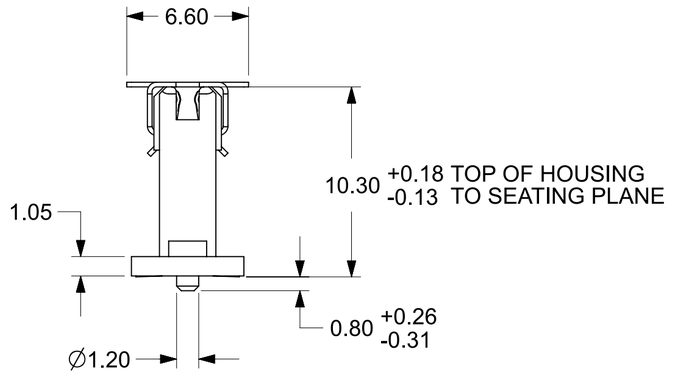

CIRCUIT SIZE	DIM.A	DIM.B	DIM.C	DIM.D
20	13.90	9.00	12.40	12.22
30	18.90	14.00	17.40	17.22
40	23.90	19.00	22.40	22.22
50	28.90	24.00	27.40	27.22
60	33.90	29.00	32.40	32.22
64	35.90	31.00	34.40	34.22
70	38.90	34.00	37.40	37.22
80	43.90	39.00	42.40	42.22
84	45.90	41.00	44.40	44.22
90	48.90	44.00	47.40	47.22
100	53.90	49.00	52.40	52.22
110	58.90	54.00	57.40	57.22
120	63.90	59.00	62.40	62.22

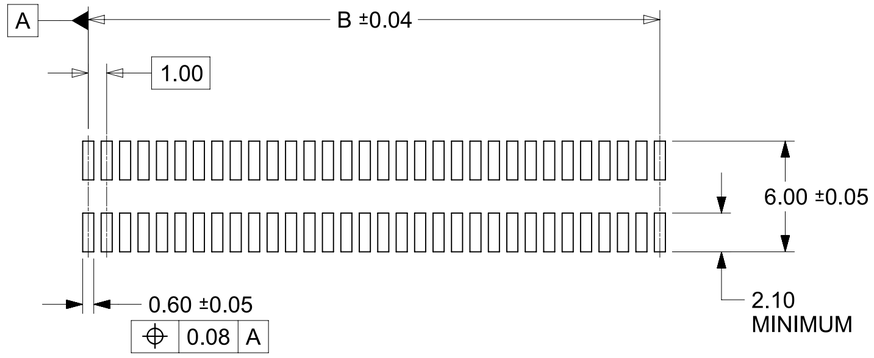

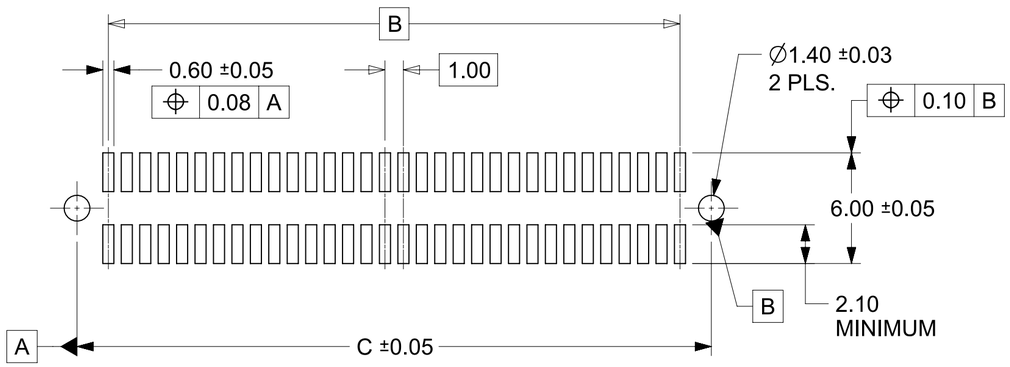

RECOMMENDED PCB LAYOUT
(WITH AND WITHOUT PEGS)
RECOMMENDED PCB THICKNESS: 1.00±0.10

NOTES

1. HOUSING MATERIAL: LIQUID CRYSTAL POLYMER(LCP) GLASS FILLED; UL RATING; 94V-0; COLOR: WHITE OR BLACK.
   TERMINAL MATERIAL: PHOSPHOR BRONZE; 0.205 THICK
   VACUUM CAP MATERIAL: STAINLESS STEEL; 0.255 THICK.
2. PLATING FINISHES: SEE SHEET 2
3. PRODUCT SPECIFICATION: PS-71436-999
4. PACKAGING SPECIFICATIONS: REFER TO CHART ON SHEET 2.
5. MATES WITH: 71436 SERIES. SEE SHEET 2 FOR MATING VIEW AND STACK HEIGHT.
6. PEGS ARE OPTIONAL. REFER TO CHART ON SHEET 2.
7. VACUUM PICK & PLACE CAP IS OPTIONAL. REFER TO CHART ON SHEET 2.
8. THIS PART CONFORMS TO EIA STANDARD 700 AAAB FOR 1.0mm TWO-PART CONNECTORS FOR USE WITH PARALLEL PRINTED BOARDS.
9. COPLANARITY OF SMT TAILS: 0.10mm MAXIMUM.
10. 64-CIRCUIT RECEPTACLE ASSEMBLY WITH PEGS AND VACUUM CAP SHOWN FOR ILLUSTRATION PURPOSES ONLY.
11. ASSEMBLY TO HAVE DATE CODE: XX XX
    WEEK — YEAR

THIS DRAWING CONTAINS INFORMATION THAT IS PROPRIETARY TO MOLEX ELECTRONIC TECHNOLOGIES, LLC AND SHOULD NOT BE USED WITHOUT WRITTEN PERMISSION

DIMENSION UNITS	MM
SCALE	NTS
GENERAL TOLERANCES (UNLESS SPECIFIED)	
ANGULAR TOL	± 0.5°
4 PLACES	±
3 PLACES	±
2 PLACES	± 0.130
1 PLACE	± 0.25
0 PLACES	±
DRAFT WHERE APPLICABLE MUST REMAIN WITHIN DIMENSIONS	

CURRENT REV DESC: REMOVED OBSOLETED PART NUMBERS AS PER PCN#514336

STATUS: Production

DRWN:	Sampreet S Mirajkar	2025-06-12
CHK'D:	Ganesh Rao B	2025-06-24
APPR:	Gurunandan GA	2025-06-24

molex

SALES ASSY, 1.0MM BOARD TO BOARD RECEPTACLE CONNECTOR 10.30 HIGH

PRODUCT CUSTOMER DRAWING

DOCUMENT NUMBER	DOC TYPE	DOC PART	REVISION
714393000	PSD	000	B1

THIRD ANGLE PROJECTION	DRAWING	SERIES	MATERIAL NUMBER	CUSTOMER	SHEET NUMBER
	C-SIZE	71439	SEE TABLE	GENERAL MARKET	1 OF 2

FORMAT: TC-tb-prod-C
REVISION: B
DATE: 2022/08/01

WHITE (NATURAL) MATERIAL

CIRCUIT SIZE	RECEPTACLE ASSY. PART NUMBER	PEGS	CONTACT PLATING (SEE PLATING NOTES)	PICK & PLACE CAP	PACKAGING SPEC. NUMBER	PACKAGING TYPE
64	71439-3164	YES	30 GOLD	NO	PK-70873-0693	TUBE
64	71439-3364	YES	30 GOLD	YES	PK-70873-0693	TUBE
64	71439-3464	YES	30 GOLD	YES	PK-70873-063	TAPE & REEL
64	71439-3564	NO	30 GOLD	NO	PK-70873-0692	TUBE
64	71439-3764	NO	30 GOLD	YES	PK-70873-0692	TUBE
64	71439-3864	NO	30 GOLD	YES	PK-70873-063	TAPE & REEL

RECOMMENDED PLUG/RECEPTACLE COMBINATION FOR MATED STACK HEIGHT PER EIA STANDARD 700 AAAB

MATED STACK HEIGHT	RECEPTACLE HEIGHT	RECEPTACLE SERIES NO.	PLUG HEIGHT	PLUG SERIES NO.
14.00	10.30	71439-3***	3.30	71436-1***
15.00	10.30	71439-3***	4.30	71436-2***

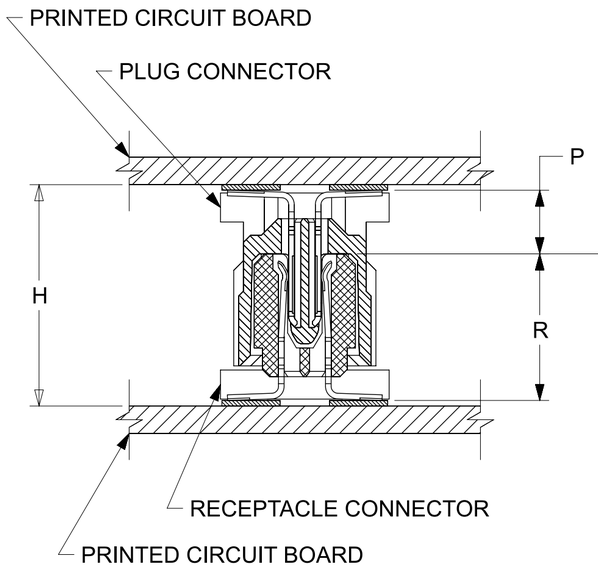

PLUG STACK HEIGHT
+ RECEPTACLE STACK HEIGHT
+ 0.40 (SOLDER PASTE ALLOWANCE)
= MATED STACK HEIGHT

P = PLUG STACK HEIGHT
R = RECEPTACLE STACK HEIGHT
H = MATED STACK HEIGHT

PLATING NOTES :

30 GOLD - SELECTIVE GOLD (Au) IN THE CONTACT AREA;
THICKNESS = 0.76 MICROMETER MINIMUM ;
SELECTIVE TIN (Sn) IN THE CONTACT AREA;
THICKNESS = 1.88 MICOMETER MINIMUM;
NICKEL UNDERPLATE OVERALL;

50 GOLD - SELECTIVE GOLD (Au) IN THE CONTACT AREA;
THICKNESS = 1.27 MICROMETER MINIMUM ;
SELECTIVE TIN (Sn) IN THE CONTACT AREA;
THICKNESS = 1.88 MICOMETER MINIMUM;
NICKEL UNDERPLATE OVERALL;

*THE PRIMARY SHIPPING CARTON WILL BE LABELED "COMPLIANT TO RoHS DIRECTIVE 2002/95/EC AND ELV ANNEX II OF DIRECTIVE 2000/53/EC". CARTONS WITHOUT THIS LABEL MAY CONTAIN PRODUCT WITH LEAD.

THIS DRAWING CONTAINS INFORMATION THAT IS PROPRIETARY TO MOLEX ELECTRONIC TECHNOLOGIES, LLC AND SHOULD NOT BE USED WITHOUT WRITTEN PERMISSION

DIMENSION UNITS	MM
SCALE	NTS
GENERAL TOLERANCES (UNLESS SPECIFIED)	
ANGULAR TOL ±	0.5°
4 PLACES ±	
3 PLACES ±	
2 PLACES ±	0.130
1 PLACE ±	0.25
0 PLACES ±	
DRAFT WHERE APPLICABLE MUST REMAIN WITHIN DIMENSIONS	

CURRENT REV DESC: REMOVED OBSOLETED PART NUMBERS AS PER PCN#514336

STATUS: Production

DRWN:	Sampreet S Mirajkar	2025-06-12
CHK'D:	Ganesh Rao B	2025-06-24
APPR:	Gurunandan GA	2025-06-24

molex

SALES ASSY, 1.0MM BOARD TO BOARD RECEPTACLE CONNECTOR 10.30 HIGH

PRODUCT CUSTOMER DRAWING

DOCUMENT NUMBER	DOC TYPE	DOC PART	REVISION
714393000	PSD	000	B1

THIRD ANGLE PROJECTION	DRAWING	SERIES	MATERIAL NUMBER	CUSTOMER	SHEET NUMBER
	C-SIZE	71439		GENERAL MARKET	2 OF 2

FORMAT TC-drprod-C
REVISION: B
DATE: 2022/08/01

WHITE (NATURAL) MATERIAL

CIRCUIT SIZE	RECEPTACLE ASSY. ITEM NUMBER	PEGS	CONTACT PLATING (SEE PLATING NOTES)	PICK & PLACE CAP	PACKAGING SPEC. NUMBER	PACKAGING TYPE
64	71439-3164	YES	30 GOLD	NO	PK-70873-0693	TUBE
64	71439-3364	YES	30 GOLD	YES	PK-70873-0693	TUBE
64	71439-3464	YES	30 GOLD	YES	PK-70873-063	TAPE & REEL
64	71439-3564	NO	30 GOLD	NO	PK-70873-0692	TUBE
64	71439-3764	NO	30 GOLD	YES	PK-70873-0692	TUBE
64	71439-3864	NO	30 GOLD	YES	PK-70873-063	TAPE & REEL
64	71439-3264	NO	50 GOLD	YES	PK-70873-063	TAPE & REEL

PLATING NOTES:

30 GOLD: SELECTIVE GOLD (Au) IN THE CONTACT AREA;
THICKNESS = 0.76 MICROMETERS (30 MICROINCHES) MINIMUM;
SELECTIVE TIN (Sn) IN THE PC TAIL AREA;
THICKNESS = 1.88 MICROMETERS (75 MICROINCHES) MINIMUM;
NICKEL UNDERPLATE OVERALL.

50 GOLD: SELECTIVE GOLD (Au) IN THE CONTACT AREA;
THICKNESS = 1.27 MICROMETERS (50 MICROINCHES) MINIMUM;
SELECTIVE TIN (Sn) IN THE PC TAIL AREA;
THICKNESS = 1.88 MICROMETERS (75 MICROINCHES) MINIMUM;
NICKEL UNDERPLATE OVERALL.

*THE PRIMARY SHIPPING CARTON WILL BE LABELED "COMPLIANT TO RoHS DIRECTIVE 2002/95/EC AND ELV ANNEX II OF DIRECTIVE 2000/53/EC". CARTONS WITHOUT THIS LABEL MAY CONTAIN PRODUCT WITH LEAD.

RECOMMENDED PLUG/RECEPTACLE COMBINATION FOR
MATED STACK HEIGHT PER EIA STANDARD 700 AAAB

MATED STACK HEIGHT	RECEPTACLE HEIGHT	RECEPTACLE SERIES NO.	PLUG HEIGHT	PLUG SERIES NO.
14.00/.551	10.30/.406	71439-3***	3.30/.130	71436-1***
15.00/.591	10.30/.406	71439-3***	4.30/.169	71436-2***

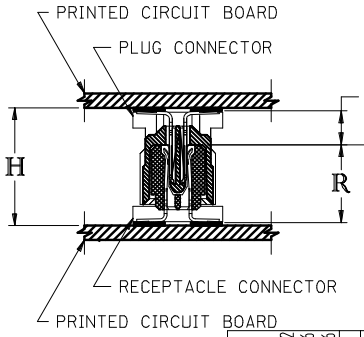

PLUG STACK HEIGHT
+ RECEPTACLE STACK HEIGHT
+ 0.40/.016 (SOLDER PASTE ALLOWANCE)
= MATED STACK HEIGHT

P = PLUG STACK HEIGHT
R = RECEPTACLE STACK HEIGHT
H = MATED STACK HEIGHT

CORRECT DESIGN UNITS
EC NO: UCP2008-2484 2008/04/22
DRWN:MSIBARRA 2008/05/06
CH'KD:BBARKER 2008/05/06
APPR:SMILLER 2008/05/06
DESCRIPTION
K
REV

QUALITY SYMBOLS
▼=0
▽=0

GENERAL TOLERANCES (UNLESS SPECIFIED)

	mm	INCH
4 PLACES	± ---	± ---
3 PLACES	± ---	± ---
2 PLACES	± ---	± ---
1 PLACE	± ---	± ---

ANGULAR ±1/2°

DRAFT WHERE APPLICABLE MUST REMAIN WITHIN DIMENSIONS

DIMENSION STYLE: MM/IN
SCALE: ---
DESIGN UNITS: METRIC
THIRD ANGLE PROJECTION

DRAWN BY: REED DATE: 1995/03/23
CHECKED BY: REED DATE: 1995/03/23
APPROVED BY: BIXLER DATE: 1995/03/23

TITLE: ASSY 1.0MM BOARD-T-BOARD RECEPTACLE CONNECTOR 10.30/.406 STACK HEIGHT

MOLEX INCORPORATED

MATERIAL NO.: SEE TABLE
DOCUMENT NO.: SDA-71439-3***
SHEET NO.: 2 OF 2
SIZE: C

THIS DRAWING CONTAINS INFORMATION THAT IS PROPRIETARY TO MOLEX INCORPORATED AND SHOULD NOT BE USED WITHOUT WRITTEN PERMISSION