Features

Regulated Converter

- 2:1 input voltage range
- 1.6kVDC isolation
- UL certified
- Efficiency up to 91%
- Six-sided continuous shield
- No minimum load required

RECOM
DC/DC Converter

RP10-A

10 Watt
1“ x 1“
Single and Dual Output

YEAR 3 warranty



UL60950-1 certified
EN55032 compliant

Description

The RP10-A series are wide input voltage range 1”x1” power DC/DC converters. Despite their small size, the RP10-A converters are fully specified devices with built-in Class A EMC filters, no minimum load, 1.6kVDC isolation, under-voltage lockout and low ripple/noise figures. The outputs are fully protected against short circuits, overcurrent and overvoltage and can be trimmed over a ±10% range. The RP10-A series will find many uses in applications where board space is at a premium as no external components are required.

Selection Guide

Part Number	Input Voltage Range [VDC]	Output Voltage [VDC]	Output Current [mA]	Input (1) Current [mA]	Efficiency (1) typ. [%]	Max. Capacitive Load (2) [µF]
RP10-123.3SA (2,3)	9-18	3.3	3000	994	83	3500
RP10-1205SA (2,3)	9-18	5	2000	969	86	2500
RP10-1212SA (2,3)	9-18	12	830	933	89	430
RP10-1215SA (2,3)	9-18	15	670	931	90	350
RP10-1224SA (2,3)	9-18	24	416	914	91	125
RP10-243.3SA (2,3)	18-36	3.3	3000	485	85	3500
RP10-2405SA (2,3)	18-36	5	2000	484	86	2500
RP10-2412SA (2,3)	18-36	12	830	456	91	430
RP10-2415SA (2,3)	18-36	15	670	465	90	350
RP10-2424SA (2,3)	18-36	24	416	457	91	125
RP10-483.3SA (2,3)	36-75	3.3	3000	243	85	3500
RP10-4805SA (2,3)	36-75	5	2000	239	87	2500
RP10-4812SA (2,3)	36-75	12	830	230	90	430
RP10-4815SA (2,3)	36-75	15	670	233	90	350
RP10-4824SA (2,3)	36-75	24	416	229	91	125
RP10-1205DA (2,3)	9-18	±5	±1000	969	86	±1440
RP10-1212DA (2,3)	9-18	±12	±416	935	89	±250
RP10-1215DA (2,3)	9-18	±15	±333	925	90	±180
RP10-2405DA (2,3)	18-36	±5	±1000	484	86	±1440
RP10-2412DA (2,3)	18-36	±12	±416	462	90	±250
RP10-2415DA (2,3)	18-36	±15	±333	463	90	±180
RP10-4805DA (2,3)	36-75	±5	±1000	239	87	±1440
RP10-4812DA (2,3)	36-75	±12	±416	229	91	±250
RP10-4815DA (2,3)	36-75	±15	±333	231	90	±180

Notes:

Note1: Maximum values at nominal input voltage and full load
Note2: Max. Cap load is tested at nominal input and full resistive load

Model Numbering

RP10-__ __ _A/_-_

nom. Input Voltage
nom. Output Voltage
Single or **D**ual
“Package (4)”
“CTRL Logic (3)”

Notes:

Note3: add suffix ”P” for CTRL function with positive logic (1=ON, 0=OFF) and Trim pin
add suffix “N” for CTRL function with negative logic (0=ON, 1=OFF) and Trim pin
or add suffix “XC” for omitted CTRL pin and Trim pin (refer to ***“Dimension Drawing (mm)”***)
Note4: add suffix “-HC” for premounted Heat-sink with clamps

Ordering Examples

RP10-1205SA/P = 12V input, 5V output, single, positive Logic CTRL pin
RP10-4805DA/XC-HC = 48V input, ±5V output, dual, without CTRL pin, Heat-sink premounted

Specifications (measured @ Ta= 25°C, nom. Vin, full load unless otherwise stated)

BASIC CHARACTERISTICS

Parameter	Condition		Min.	Typ.	Max.
Internal Input Filter					Pi-Type
Input Voltage Range	nom. Vin = 12VDC nom. Vin = 24VDC nom. Vin = 48VDC		9VDC 18VDC 36VDC	12VDC 24VDC 48VDC	18VDC 36VDC 75VDC
Input Surge Voltage	1s max.	nom. Vin = 12VDC nom. Vin = 24VDC nom. Vin = 48VDC			25VDC 50VDC 100VDC
Under Voltage Lockout (UVLO)	nom. Vin = 12VDC	DC-DC ON DC-DC OFF		8VDC	9VDC
	nom. Vin = 24VDC	DC-DC ON DC-DC OFF		16VDC	18VDC
	nom. Vin = 48VDC	DC-DC ON DC-DC OFF		33VDC	36VDC
Output Voltage Trimming	refer to ***"OUTPUT VOLTAGE TRIMMING"***	3.3Vout, 12Vout Others	-10% -10%		+10% +20%
Minimum Load			0%		
Start-up Time	Power up ON/OFF CTRL				30ms 30ms
ON/OFF CTRL [5] refer to ***"ON/OFF CTRL"***	Positive Logic	DC-DC ON DC-DC OFF			Open or 3.0VDC < V_{CTRL}< 15VDC Short or 0VDC < V_{CTRL}< 1.2VDC
	Negative Logic	DC-DC ON DC-DC OFF			Short or 0VDC < V_{CTRL}< 1.2VDC Open or 3.0VDC < V_{CTRL}< 15VDC
Input Current of CTRL pin	drive current	I_{CTRL}	-0.5mA		+1.0mA
Standby Current	DC-DC OFF	I_{In}		2.5mA	
Internal Operating Frequency			297kHz	330kHz	363kHz
Output Ripple and Noise	measured at 20MHz BW, with a 10µF/25V X7R 1206 MLCC	3.3Vout, 5Vout 12Vout, 15Vout		40mVp-p 60mVp-p	
	measured at 20MHz BW, with a 1µF/50V X7R 1206 MLCC	24Vout		60mVp-p	
Input Reflected Ripple Current				30mAp-p	

Notes:

Note5: If suffix "XC" is specified, the control pin will be absent. If fitted, the ON/OFF control function can be positive or negative logic. The pin voltage is referenced to -Vin

RP10-2405SA

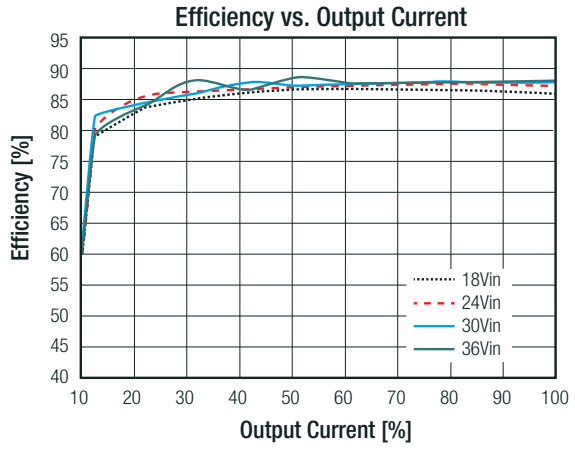

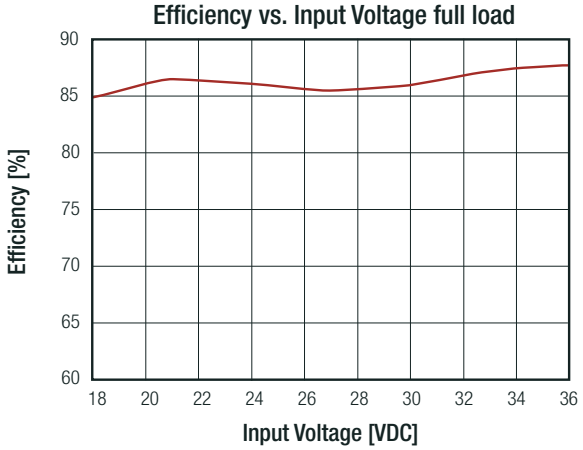

Specifications (measured @ Ta= 25°C, nom. Vin, full load unless otherwise stated)

ON/OFF CTRL

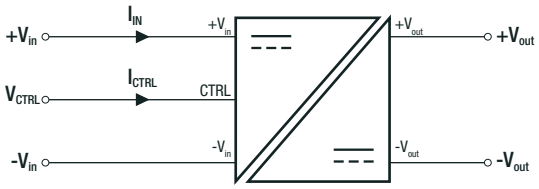

Positve Logic	DC-DC ON	Open or 3.0VDC < V_{CTRL} < 15VDC
	DC-DC OFF	Short or 0VDC < V_{CTRL} < 1.2VDC
Negativ Logic	DC-DC ON	Short or 0VDC < V_{CTRL} < 1.2VDC
	DC-DC OFF	Open or 3.0VDC < V_{CTRL} < 15VDC

OUTPUT VOLTAGE TRIMMING

Output Voltage Trimming

Single output Powerline converters offer the feature of trimming the output voltage over a certain range around the nominal value by using external trim resistors. No general equation can be given for calculating the trim resistors, but the following trimtables give typical values for choosing these trimming resistors. If voltages between the given trim points are required, extrapolate between the two nearest given values to work out the resistor required or use a variable resistor to set the output voltage. Output can be externally trimmed by using the method shown below.

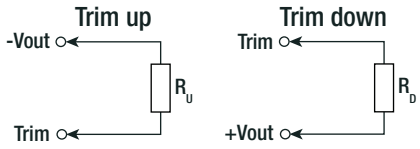

RP10-xx3.3SA

Trim up	1	2	3	4	5	6	7	8	9	10	[%]
Vout =	3.333	3.366	3.399	3.432	3.465	3.498	3.531	3.564	3.597	3.63	[VDC]
R_U =	385.071	191.511	126.990	94.730	75.374	62.470	53.253	46.340	40.963	36.662	[kΩ]

Trim down	1	2	3	4	5	6	7	8	9	10	[%]
Vout =	3.267	3.234	3.201	3.168	3.135	3.102	3.069	3.036	3.003	2.97	[VDC]
R_D =	116.719	54.779	34.133	23.810	17.616	13.486	10.537	8.325	6.604	5.228	[kΩ]

RP10-xx05SA

Trim up	1	2	3	4	5	6	7	8	9	10	[%]
Vout =	5.05	5.10	5.15	5.20	5.25	5.30	5.35	5.4	5.45	5.50	[VDC]
R_U =	253.450	125.700	83.117	61.825	49.050	40.533	34.450	29.888	26.339	23.500	[kΩ]

Trim up	11	12	13	14	15	16	17	18	19	20	[%]
Vout =	5.55	5.60	5.65	5.70	5.75	5.80	5.85	5.90	5.95	6.00	[VDC]
R_U =	21.177	19.242	17.604	16.200	14.983	13.919	12.979	12.144	11.397	10.725	[kΩ]

Trim down	1	2	3	4	5	6	7	8	9	10	[%]
Vout =	4.95	4.90	4.85	4.80	4.75	4.70	4.65	4.60	4.55	4.50	[VDC]
R_D =	248.340	120.590	78.007	56.715	43.940	35.423	29.340	24.778	21.229	18.390	[kΩ]

RP10-xx12SA

Trim up	1	2	3	4	5	6	7	8	9	10	[%]
Vout =	12.12	12.24	12.36	12.48	12.60	12.72	12.84	12.96	13.08	13.20	[VDC]
R_U =	203.223	99.057	64.334	46.973	36.557	29.612	24.652	20.932	18.038	15.723	[kΩ]

Trim down	1	2	3	4	5	6	7	8	9	10	[%]
Vout =	11.88	11.76	11.64	11.52	11.40	11.28	11.16	11.04	10.92	10.8	[VDC]
R_D =	776.557	380.723	248.779	182.807	143.223	116.834	97.985	83.848	72.853	64.057	[kΩ]

continued on next page

Specifications (measured @ Ta= 25°C, nom. Vin, full load unless otherwise stated)

RP10-xx15SA

Trim up	1	2	3	4	5	6	7	8	9	10	[%]
Vout =	15.15	15.30	15.45	15.60	15.75	15.90	16.05	16.20	16.35	16.50	[VDC]
R_U =	161.557	78.223	50.446	36.557	28.223	22.668	18.700	15.723	13.409	11.557	[kΩ]
Trim up	11	12	13	14	15	16	17	18	19	20	[%]
Vout =	16.65	16.80	16.95	17.10	17.25	17.40	17.55	17.70	17.85	18.00	[VDC]
R_U =	10.042	8.779	7.711	6.795	6.001	5.307	4.694	4.149	3.662	3.223	[kΩ]
Trim down	1	2	3	4	5	6	7	8	9	10	[%]
Vout =	14.85	14.70	14.55	14.40	14.25	14.10	13.95	13.80	13.65	13.50	[VDC]
R_D =	818.223	401.557	262.668	193.223	151.557	123.779	103.938	89.057	77.483	68.223	[kΩ]

RP10-xx24SA

Trim up	1	2	3	4	5	6	7	8	9	10	[%]
Vout =	24.24	24.48	24.72	24.96	25.20	25.44	25.68	25.92	26.16	26.40	[VDC]
R_U =	570.333	278.667	181.444	132.833	13.667	84.222	70.333	59.917	51.815	45.333	[kΩ]
Trim up	11	12	13	14	15	16	17	18	19	20	[%]
Vout =	26.64	26.88	27.12	27.36	27.60	27.84	28.08	28.32	28.56	28.80	[VDC]
R_U =	40.030	35.611	31.872	28.667	25.889	23.458	21.314	19.407	17.702	16.167	[kΩ]
Trim down	1	2	3	4	5	6	7	8	9	10	[%]
Vout =	23.76	23.52	23.28	23.04	22.80	22.56	22.32	22.08	21.84	21.60	[VDC]
R_D =	4947.667	2439.333	1603.222	1185.167	934.333	767.111	647.667	558.083	488.407	432.667	[kΩ]

REGULATIONS

Parameter	Condition		Value
Output Accuracy			±1.0%
Line Regulation	low line to high line, full load	Single	±0.2%
		Dual	±0.5%
Load Regulation	0% to 100% load	Single	±0.2%
		Dual	±1.0%
	10% to 90% load	Single	±0.1%
		Dual	±0.8%
Cross Regulation	asymmetrical 25%<>100% load		±5.0%
Transient Response Recovery Time	25% load step change		250µs typ.

Specifications (measured @ Ta= 25°C, nom. Vin, full load unless otherwise stated)

PROTECTIONS

Parameter	Condition		Value
Short Circuit Protection (SCP)			continuous, automatic recovery
Over Voltage Protection (OVP)	zener diode clamp	3.3Vout 5Vout 12Vout 15Vout 24Vout	3.7 - 5.4VDC 6.3 - 7.4VDC 13.5 - 19.6VDC 18.3 - 22.0VDC 29.1 - 32.5VDC
Over Load Protection (OLP)	% of Iout rated		150% typ., Hiccup mode
Isolation Voltage (6)	I/P to O/P I/P to O/P to case		1.6kVDC/ 1 minute 1.0kVDC/ 1 minute
Isolation Resistance	Viso= 500VDC		1GΩ min.
Isolation Capacitance			1500pF max.

Notes:

Note6: For repeat Hi-Pot testing, reduce the time and/or the test voltage

Note7: This power module is not internally fused. An input line fuse must always be used
Recom suggests: 12Vin= T2A; 24Vin= T1A; 48Vin= T0.5A slow blow types

ENVIRONMENTAL

Parameter	Condition		Value
Operating Temperature Range	without derating with derating		-40°C to +78°C -40°C to +100°C
Maximum Case Temperature			+105°C
Temperature Coefficient			±0.02%/K max.
Thermal Impedance	@ natural convection 0.1m/s, vertical direction	without heat-sink with heat-sink	18.2K/W 15.8K/W
Operating Humidity	non-condensing		5% - 95% RH
Thermal Shock			according to MIL-STD-810F
Vibration			according to MIL-STD-810F
MTBF	according to MIL-HDBK-217F, G.B.	+25°C	3308 x 10^3 hours

Derating Graph (8)

RP10-2405SA

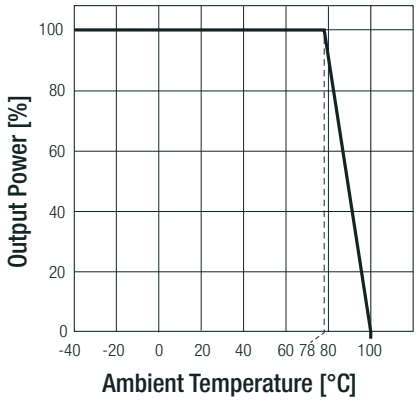

RP10-2405SA-HC

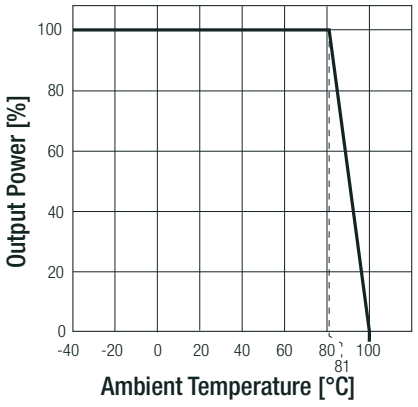

Notes:

Note8: Derating graphs are valid only for the shown part numbers. If you need detailed derating-information about a part-number not shown here please contact RECOM Techsupport for detailed information

Specifications (measured @ Ta= 25°C, nom. Vin, full load unless otherwise stated)

SAFETY AND CERTIFICATIONS		
Certificate Type (Safety)	**Condition**	**Standard**
Information Technology Equipment, General Requirements for Safety	E196683	UL60950-1, 1st Edition CAN/CSA-C22.2 No. 60950-1, 1st Edition
EAC	RU-AT.49.09571	TP TC 004/2011
RoHS2+		RoHS-2011/65/EU + AM-2015/863

EMC Compliance	**Condition**	**Standard / Criterion**
Electromagnetic compatibility of multimedia equipment - Emission requirements	without external filter refer to ***"EMC Filtering Suggestions"***	EN55032, Class A EN55032, Class B
ESD Electrostatic discharge immunity test	Air ±8kV and Contact ±6kV	EN61000-4-2, Criteria A
Radiated, radio-frequency, electromagnetic field immunity test	10V/m	EN61000-4-3, Criteria A
Fast Transient and Burst Immunity (9)	±2kV	EN61000-4-4, Criteria A
Surge Immunity (9)	±1kV	EN61000-4-5, Criteria A
Immunity to conducted disturbances, induced by radio-frequency fields	3Vr.m.s	EN61000-4-6, Criteria A
Power Magnetic Field Immunity	100A/m continuous; 1000A/m 1s	EN61000-4-8, Criteria A

Notes:

Note9: An external input filter capacitor is required if the module has to meet EN61000-4-4, EN61000-4-5
Recom suggests Nippon chemi-con KY series 220µF/100V

EMC Filtering Suggestions according to EN55032

Single

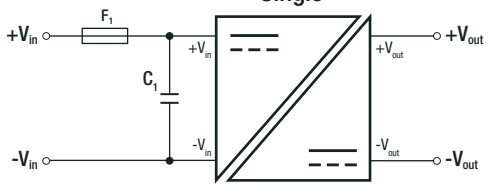

Dual

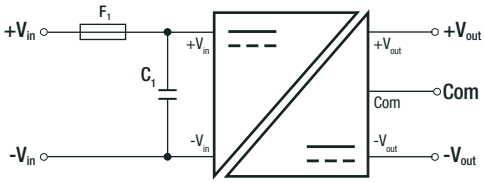

Component List Class B

MODEL	C1
RP10-12xxSA, RP10-12xxDA	10µF/25V, 1812 MLCC
RP10-24xxSA, RP10-24xxDA	6.8µF/50V, 1812 MLCC
RP10-48xxSA, RP10-48xxDA	4.7µF/100V, 1812 MLCC

DIMENSIONS AND PHYSICAL CHARACTERISTICS		
Parameter	**Type**	**Value**
Material	case base potting	copper alloy C2680 FR4 PCB epoxy (UL94 V-0)
Dimensions (LxWxH)	without Heat-sink with Heat-sink	25.4 x 25.4 x 9.9mm 31.4 x 25.4 x 16.5mm
Weight	without Heat-sink with Heat-sink	16.5g 23g

continued on next page

Specifications (measured @ Ta= 25°C, nom. Vin, full load unless otherwise stated)

Dimension Drawing (mm)

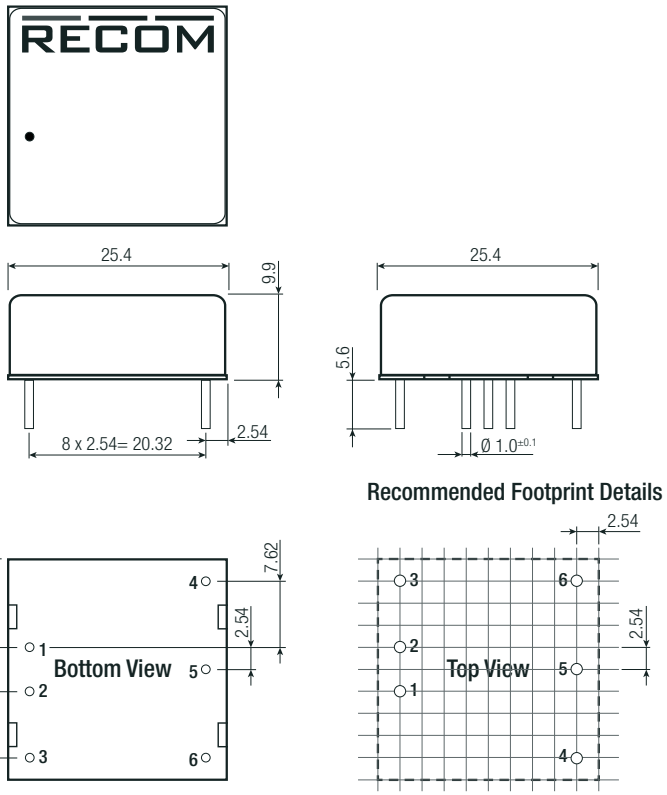

Pinning Information

Pin #	Single	Dual	"/XC"
1	+Vin	+Vin	+Vin
2	-Vin	-Vin	-Vin
3	CTRL (3)	CTRL (3)	no Pin (3)
4	+Vout	+Vout	+Vout
5	Trim	Com	Trim
6	-Vout	-Vout	-Vout

Pin Pitch Tolerance ±0.25mm
Tolerance: xx.x= ±0.5mm
xx.xx= ±0.25mm

Dimension Drawing with Heat-sink (mm)

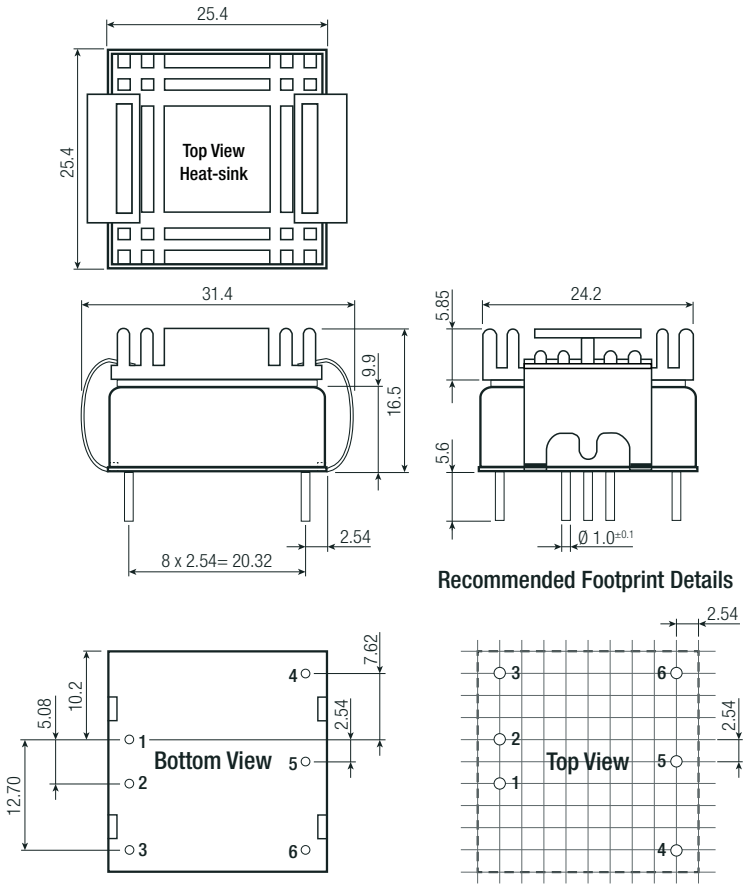

Pinning Information

Pin #	Single	Dual	"/XC"
1	+Vin	+Vin	+Vin
2	-Vin	-Vin	-Vin
3	CTRL (3)	CTRL (3)	no Pin (3)
4	+Vout	+Vout	+Vout
5	Trim	Com	Trim
6	-Vout	-Vout	-Vout

Pin Pitch Tolerance ±0.25mm
Tolerance: xx.x= ±0.5mm
xx.xx= ±0.25mm

Specifications (measured @ Ta= 25°C, nom. Vin, full load unless otherwise stated)

PACKAGING INFORMATION			
Parameter	**Type**		**Value**
Packaging Dimension (LxWxH)	tube tray	without heat-sink with heat-sink	257.0 x 28.5 x 21.0mm 230.0 x 180.0 x 28.0mm
Packaging Quantity	tube tray	without heat-sink with heat-sink	8pcs 20pcs
Storage Temperature Range			-55°C to +125°C
Storage Humidity	non-condensing		5% - 95% RH

The product information and specifications may be subject to changes even without prior written notice.The product has been designed for various applications; its suitability lies in the responsibility of each customer. The products are not authorized for use in safety-critical applications without RECOM's explicit written consent. A safety-critical application is an application where a failure may reasonably be expected to endanger or cause loss of life, inflict bodily harm or damage property. The applicant shall indemnify and hold harmless RECOM, its affiliated companies and its representatives against any damage claims in connection with the unauthorized use of RECOM products in such safety-critical applications.