RJF0622JSP

60V, 3A N Channel Thermal FET
Power Switching

R07DS1418EJ0100
Rev.1.00
Jun 04, 2018

Description

This FET has the over temperature shut-down capability sensing to the junction temperature. This FET has the built-in over temperature shut-down circuit in the gate area. And this circuit operation to shut-down the gate voltage in case of high junction temperature like applying over power consumption, over current etc..

Features

- Logic level operation.
- Built-in the over temperature shut-down circuit and current limitation circuit.
- High endurance capability against to the short circuit.
- Temperature hysteresis type.
- High density mounting
- Power supply voltage applies 12 V and 24 V. (Max Power supply voltage : 38 V)
- AEC-Q101 Compliant

Outline

RENESAS Package code: PRSP0008DD-D
(Package name: SOP-8 <FP-8DAV>)

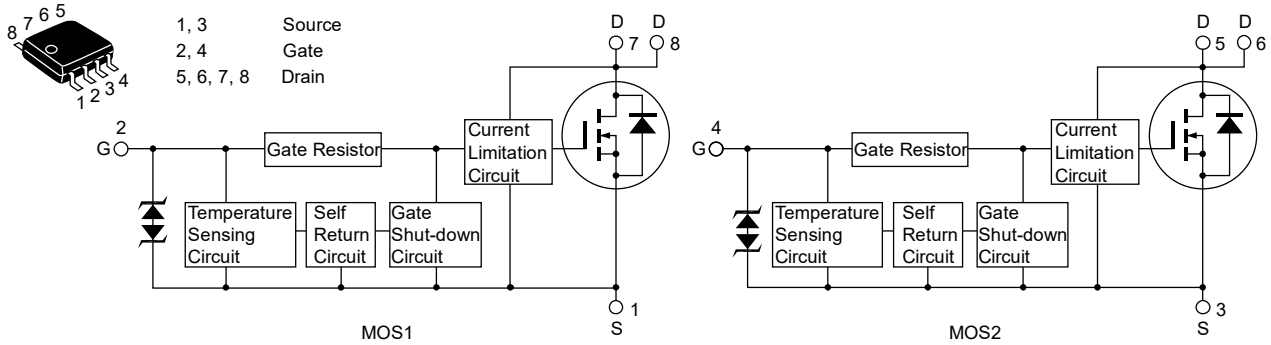

Absolute Maximum Ratings

(Ta = 25°C)

Item	Symbol	Ratings	Unit
Drain to source voltage	V_{DSS}	60	V
Gate to source voltage	V_{GSS}	16	V
Gate to source voltage	V_{GSS}	–2.5	V
Drain current	I_D Note4	3	A
Body-drain diode reverse drain current	I_{DR}	3	A
Avalanche current	I_{AP} Note 3	0.9	A
Avalanche energy	E_{AR} Note 3	69.4	mJ
Channel dissipation	Pch Note 1	2	W
Channel dissipation	Pch Note 2	3	W
Channel temperature	Tch	150	°C
Storage temperature	Tstg	–55 to +150	°C

Notes: 1. 1 Drive operation: When using the glass epoxy board (FR4 40 × 40 × 1.6 mm), PW ≤ 10 s
2. 2 Drive operation: When using the glass epoxy board (FR4 40 × 40 × 1.6 mm), PW ≤ 10 s
3. Tch = 25°C, Rg ≥ 50 Ω, L = 100 mH
4. It provides by the current limitation lower bound value.

Typical Operation Characteristics

(Ta = 25°C)

Item	Symbol	Min	Typ	Max	Unit	Test Conditions
Input voltage	V_{IH}	3.5	—	—	V	
	V_{IL}	—	—	1.2	V	
Input current (Gate non shut down)	I_{IH1}	—	—	100	μA	Vi = 8 V, V_{DS} = 0
	I_{IH2}	—	—	50	μA	Vi = 3.5 V, V_{DS} = 0
	I_{IL}	—	—	1	μA	Vi = 1.2 V, V_{DS} = 0
Input current (Gate shut down)	$I_{IH(sd)1}$	—	0.8	—	mA	Vi = 8 V, V_{DS} = 0
	$I_{IH(sd)2}$	—	0.35	—	mA	Vi = 3.5 V, V_{DS} = 0
Shut down temperature	Tsd	—	175	—	°C	Channel temperature
Return temperature	Thr	—	120	—	°C	Channel temperature
Gate operation voltage	Vop	3.5	—	12	V	
Drain current (Current limitation value)	$I_{D\ limit}$	3	—	—	A	V_{GS} = 5 V, V_{DS} = 10 V Note 5
Load short-circuit voltage	V_{DD}	—	—	32	V	V_{GS} = 5 V, RL = 0

Notes: 5. Pulse test

Electrical Characteristics

(Ta = 25°C)

Item	Symbol	Min	Typ	Max	Unit	Test Conditions
Drain current	I_{D1}	—	—	10	mA	V_{GS} = 1.2 V, V_{DS} = 10 V
	I_{D2}	3	—	—	A	V_{GS} = 5 V, V_{DS} =10 V Note 6
Drain to source breakdown voltage	$V_{(BR)DSS}$	60	—	80	V	I_D = 10 mA, V_{GS} = 0
Gate to source breakdown voltage	$V_{(BR)GSS}$	16	—	—	V	I_G = 800 μA, V_{DS} = 0
	$V_{(BR)GSS}$	–2.5	—	—	V	I_G = –100 μA, V_{DS} = 0
Gate to source leak current	I_{GSS1}	—	—	100	μA	V_{GS} = 8 V, V_{DS} = 0
	I_{GSS2}	—	—	50	μA	V_{GS} = 3.5 V, V_{DS} = 0
	I_{GSS3}	—	—	1	μA	V_{GS} = 1.2 V, V_{DS} = 0
	I_{GSS4}	—	—	–100	μA	V_{GS} = –2.4 V, V_{DS} = 0
Input current (shut down)	$I_{GS(OP)1}$	—	0.8	—	mA	V_{GS} = 8 V, V_{DS} = 0
	$I_{GS(OP)2}$	—	0.35	—	mA	V_{GS} = 3.5 V, V_{DS} = 0
Zero gate voltage drain current	I_{DSS}	—	—	10	μA	V_{DS} = 32 V, V_{GS} = 0, Ta = 125°C
Gate to source cutoff voltage	$V_{GS(off)}$	1.1	—	2.1	V	I_D = 1 mA, V_{DS} = 10 V
Static drain to source on state resistance	$R_{DS(on)}$	—	159	180	mΩ	I_D = 2.5 A, V_{GS} = 5 V Note 6
	$R_{DS(on)}$	—	139	160	mΩ	I_D = 2.5 A, V_{GS} = 10 V Note 6
Forward transfer admittance	$\|y_{fs}\|$	3.3	5.4	—	S	I_D = 2.5 A, V_{DS} = 10 V Note 6
Output capacitance	Coss	—	154	—	pF	V_{DS} = 10 V, V_{GS} = 0, f = 1MHz
Turn-on delay time	$t_{d(on)}$	—	1.9	—	μs	I_D= 2.5 A, V_{GS} = 5 V, R_L = 12 Ω
Rise time	t_r	—	11.0	—	μs	
Turn-off delay time	$t_{d(off)}$	—	1.1	—	μs	
Fall time	t_f	—	3.0	—	μs	
Body-drain diode forward voltage	V_{DF}	—	0.91	—	V	I_F = 5 A, V_{GS} = 0
Body-drain diode reverse recovery time	t_{rr}	—	662	—	ns	I_F = 3 A, V_{GS} = 0, di_F/dt = 50 A/μs
Over load shut down operation time Note 7	t_{os1}	—	0.29	—	ms	V_{GS} = 5 V, V_{DD} = 16 V
	t_{os2}	—	0.18	—	ms	V_{GS} = 5 V, V_{DD} = 24 V

Notes: 6. Pulse test

7. Including the junction temperature rise of the over loaded condition.

Main Characteristics

Power vs. Temperature Derating

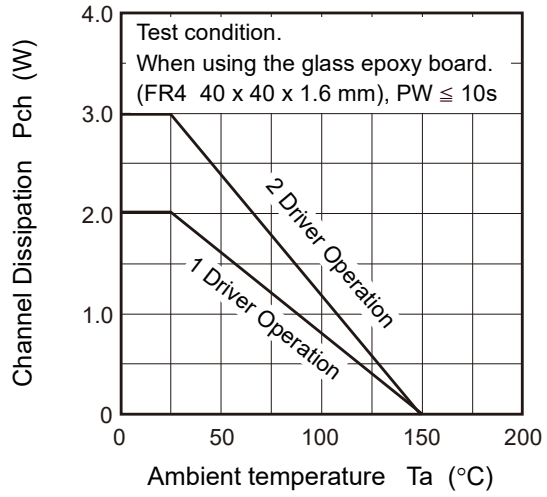

Maximum Safe Operation Area

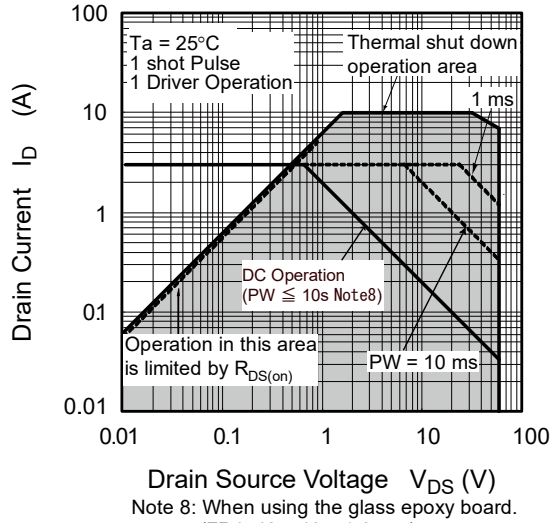

Note 8: When using the glass epoxy board.
(FR4 40 x 40 x 1.6 mm)

Typical Output Characteristics

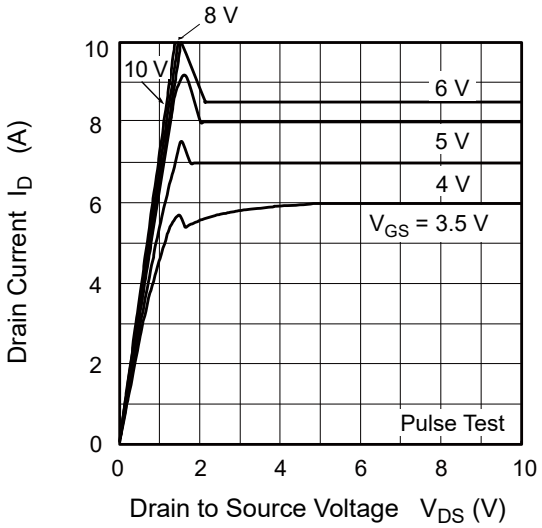

Typical Transfer Characteristics

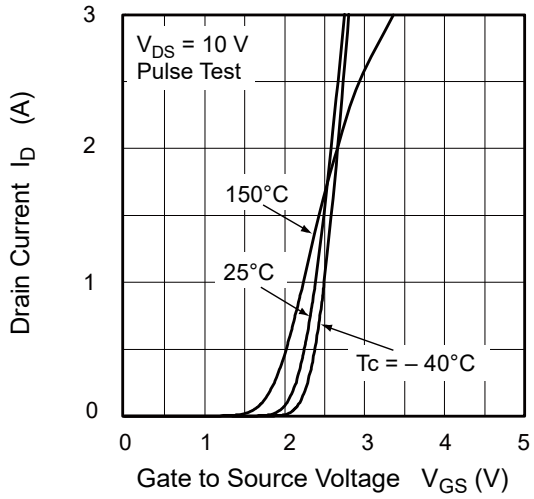

Drain to Source Saturation Voltage vs.
Gate to Source Voltage

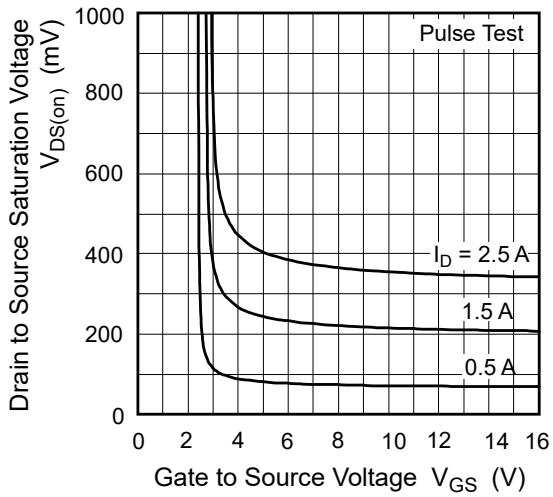

Static Drain to Source on State Resistance
vs. Drain Current

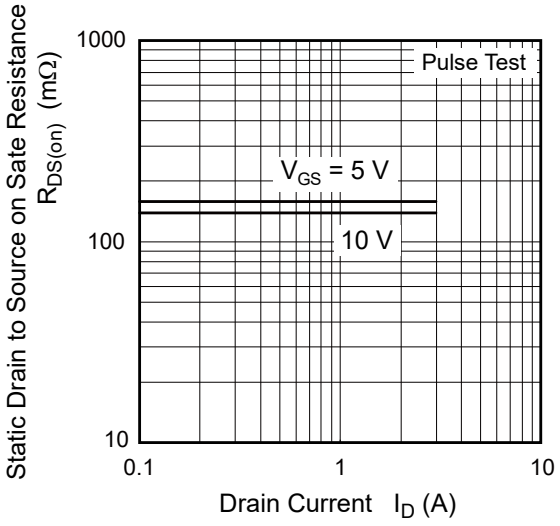

Static Drain to Source on State Resistance vs. Temperature

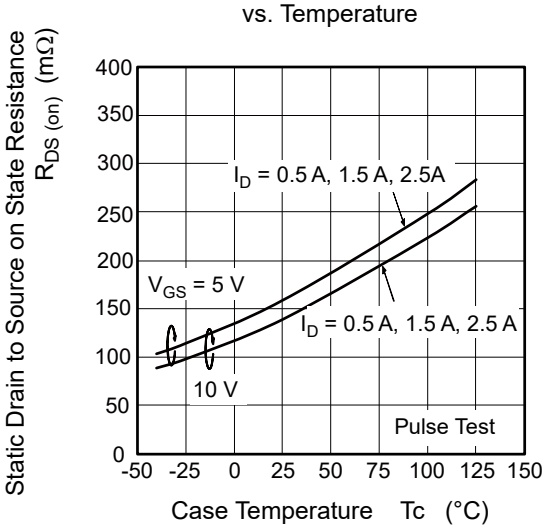

Forward Transfer Admittance vs. Drain Current

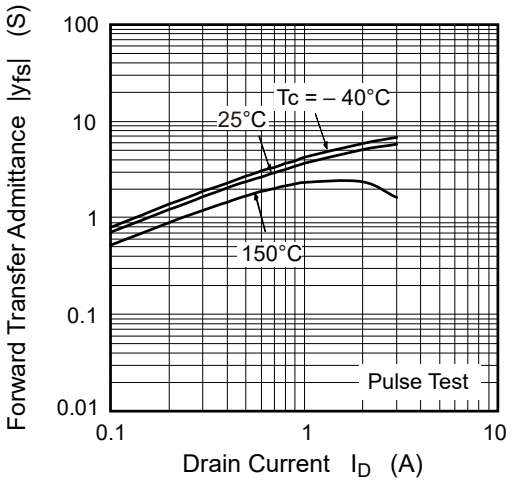

Body-Drain Diode Reverse Recovery Time

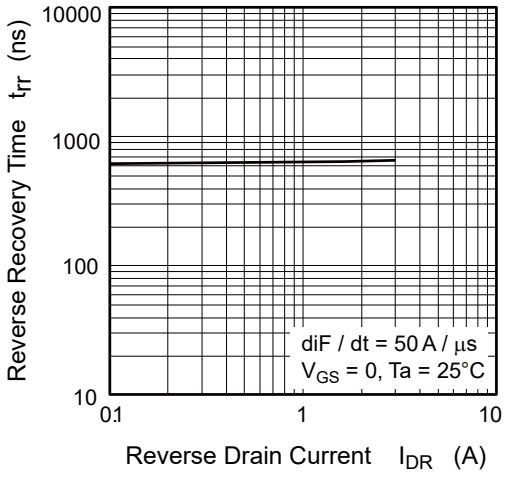

Switching Characteristics

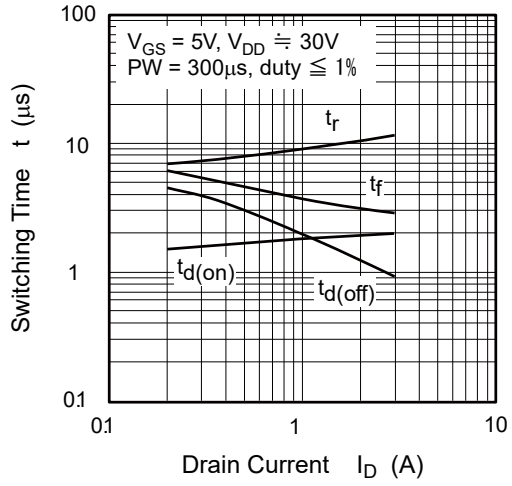

Reverse Drain Current vs. Source to Drain Voltage

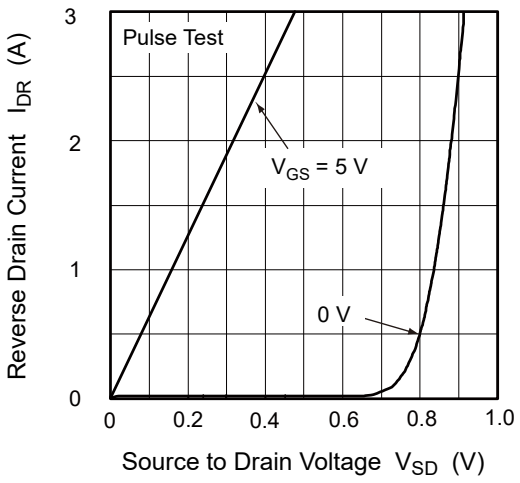

Typical Capacitance vs. Drain to Source Voltage

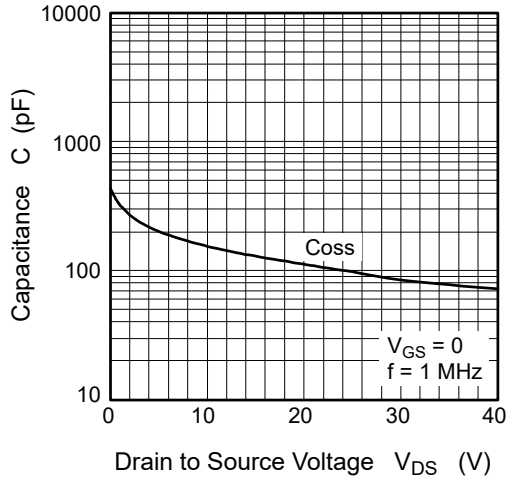

Gate to Source Voltage vs.
Shutdown Time of Load-Short Test

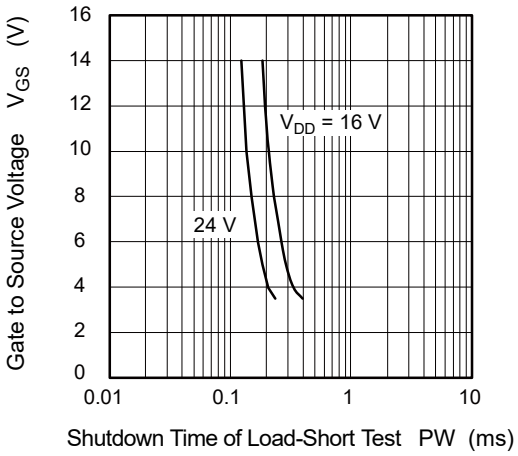

Shutdown Case Temperature vs.
Gate to Source Voltage

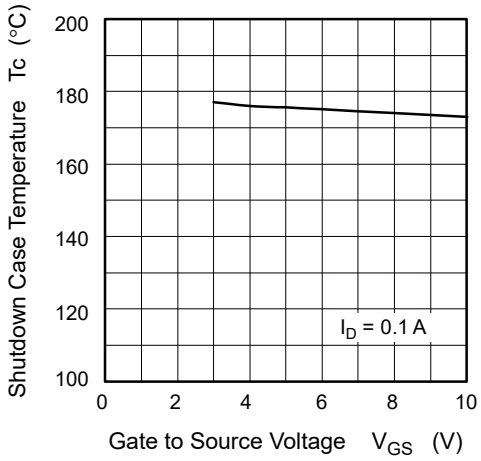

Normalized Transient Thermal Impedance vs. Pulse Width (1 Drive Operation)

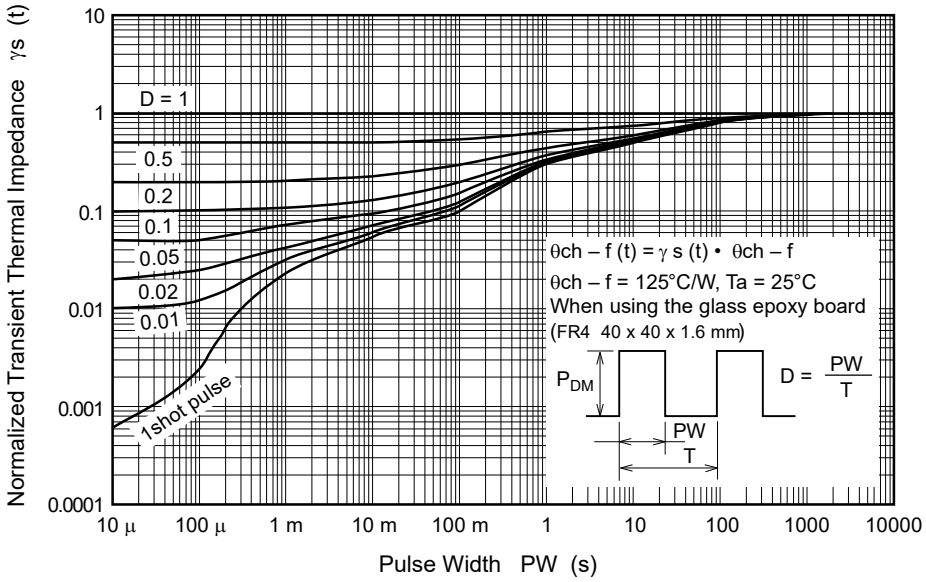

Normalized Transient Thermal Impedance vs. Pulse Width (2 Drive Operation)

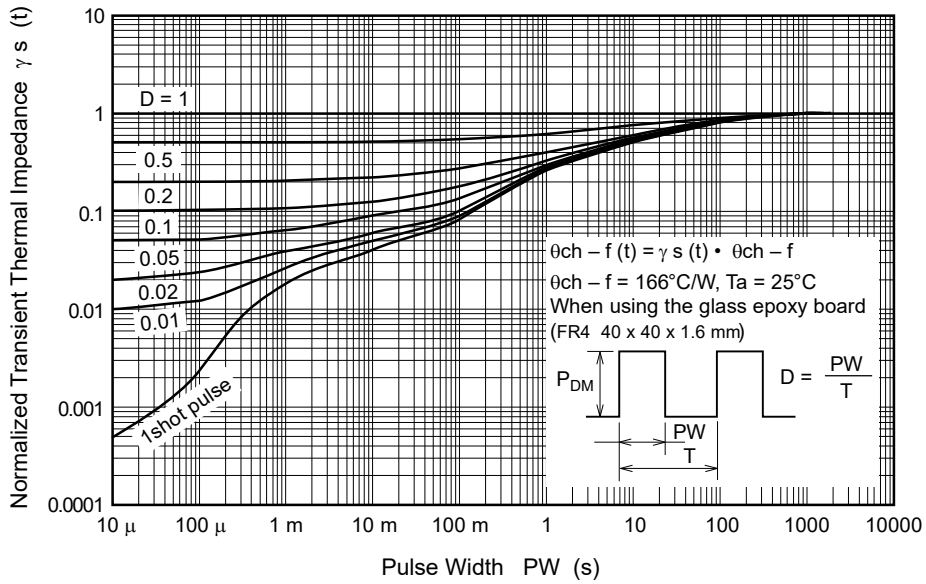

Switching Time Test Circuit

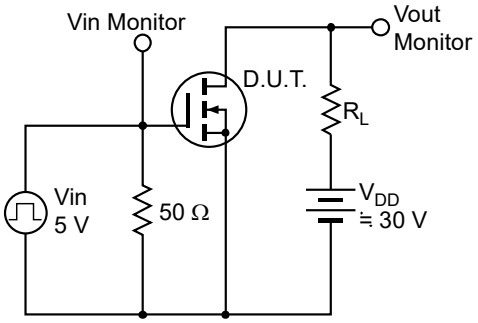

Waveform

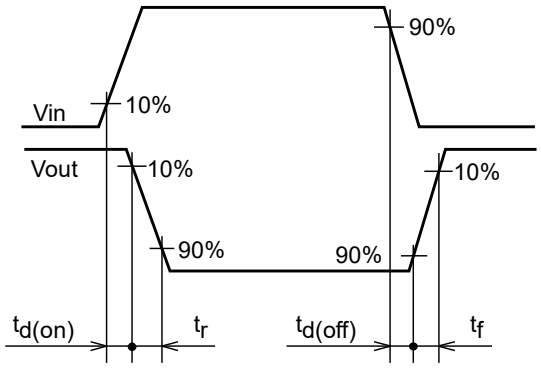

Avalanche Test Circuit

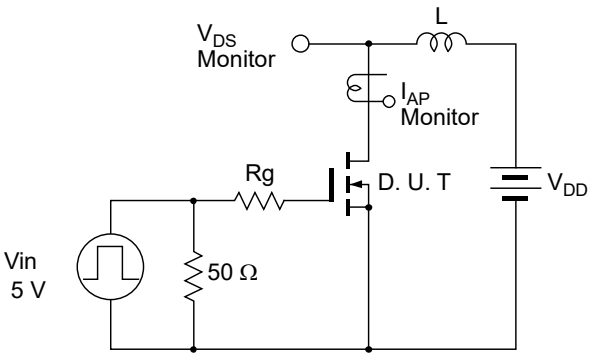

Avalanche Waveform

$$E_{AR} = \frac{1}{2} L \cdot I_{AP}^2 \cdot \frac{V_{(BR)DSS}}{V_{(BR)DSS} - V_{DD}}$$

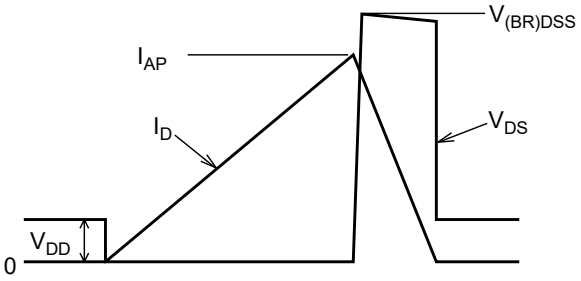

Package Dimensions

Package Name	JEITA Package Code	RENESAS Code	Previous Code	MASS[Typ.]
SOP-8	P-SOP8-3.95 × 4.9-1.27	PRSP0008DD-D	FP-8DAV	0.085g

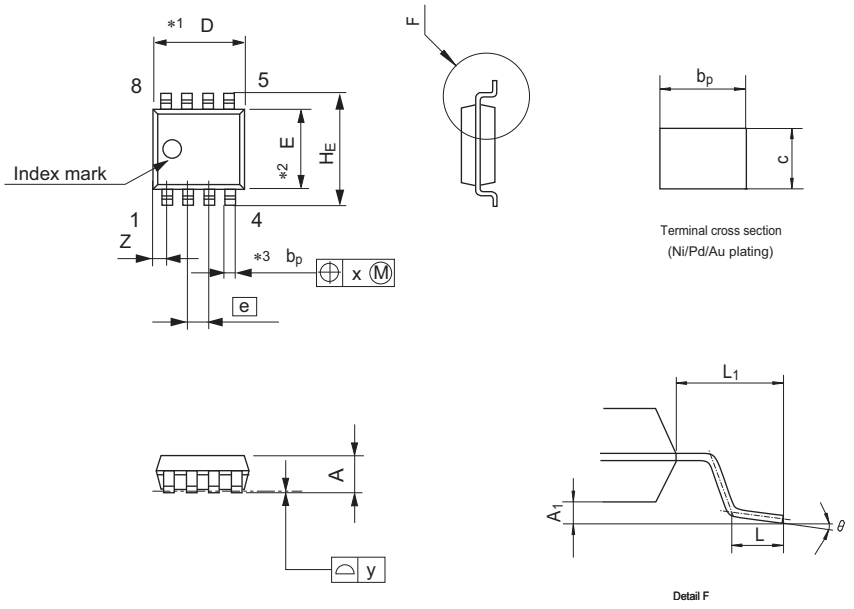

NOTE)
1. DIMENSIONS "*1(Nom)" AND "*2" DO NOT INCLUDE MOLD FLASH.
2. DIMENSION "*3" DOES NOT INCLUDE TRIM OFFSET.

Reference Symbol	Dimension in Millimeters		
	Min	Nom	Max
D	—	4.90	5.3
E	—	3.95	—
A_2	—	—	—
A_1	0.10	0.14	0.25
A	—	—	1.75
b_p	0.34	0.40	0.46
b_1	—	—	—
c	0.15	0.20	0.25
c_1	—	—	—
θ	0°	—	8°
H_E	5.80	6.10	6.20
e	—	1.27	—
x	—	—	0.25
y	—	—	0.1
Z	—	—	0.75
L	0.40	0.60	1.27
L_1	—	1.08	—

Ordering Information

Orderable Part Number	Quantity	Shipping Container
RJF0622JSP-00-J0	2500 pcs/Reel	Taping (Reel)

Note: The symbol of 2nd "-" is occasionally presented as "#".

Notice

1. Descriptions of circuits, software and other related information in this document are provided only to illustrate the operation of semiconductor products and application examples. You are fully responsible for the incorporation or any other use of the circuits, software, and information in the design of your product or system. Renesas Electronics disclaims any and all liability for any losses and damages incurred by you or third parties arising from the use of these circuits, software, or information.
2. Renesas Electronics hereby expressly disclaims any warranties against and liability for infringement or any other claims involving patents, copyrights, or other intellectual property rights of third parties, by or arising from the use of Renesas Electronics products or technical information described in this document, including but not limited to, the product data, drawings, charts, programs, algorithms, and application examples.
3. No license, express, implied or otherwise, is granted hereby under any patents, copyrights or other intellectual property rights of Renesas Electronics or others.
4. You shall not alter, modify, copy, or reverse engineer any Renesas Electronics product, whether in whole or in part. Renesas Electronics disclaims any and all liability for any losses or damages incurred by you or third parties arising from such alteration, modification, copying or reverse engineering.
5. Renesas Electronics products are classified according to the following two quality grades: “Standard” and “High Quality”. The intended applications for each Renesas Electronics product depends on the product’s quality grade, as indicated below.

   "Standard": Computers; office equipment; communications equipment; test and measurement equipment; audio and visual equipment; home electronic appliances; machine tools; personal electronic equipment; industrial robots; etc.

   "High Quality": Transportation equipment (automobiles, trains, ships, etc.); traffic control (traffic lights); large-scale communication equipment; key financial terminal systems; safety control equipment; etc.

   Unless expressly designated as a high reliability product or a product for harsh environments in a Renesas Electronics data sheet or other Renesas Electronics document, Renesas Electronics products are not intended or authorized for use in products or systems that may pose a direct threat to human life or bodily injury (artificial life support devices or systems; surgical implantations; etc.), or may cause serious property damage (space system; undersea repeaters; nuclear power control systems; aircraft control systems; key plant systems; military equipment; etc.). Renesas Electronics disclaims any and all liability for any damages or losses incurred by you or any third parties arising from the use of any Renesas Electronics product that is inconsistent with any Renesas Electronics data sheet, user’s manual or other Renesas Electronics document.
6. When using Renesas Electronics products, refer to the latest product information (data sheets, user’s manuals, application notes, “General Notes for Handling and Using Semiconductor Devices” in the reliability handbook, etc.), and ensure that usage conditions are within the ranges specified by Renesas Electronics with respect to maximum ratings, operating power supply voltage range, heat dissipation characteristics, installation, etc. Renesas Electronics disclaims any and all liability for any malfunctions, failure or accident arising out of the use of Renesas Electronics products outside of such specified ranges.
7. Although Renesas Electronics endeavors to improve the quality and reliability of Renesas Electronics products, semiconductor products have specific characteristics, such as the occurrence of failure at a certain rate and malfunctions under certain use conditions. Unless designated as a high reliability product or a product for harsh environments in a Renesas Electronics data sheet or other Renesas Electronics document, Renesas Electronics products are not subject to radiation resistance design. You are responsible for implementing safety measures to guard against the possibility of bodily injury, injury or damage caused by fire, and/or danger to the public in the event of a failure or malfunction of Renesas Electronics products, such as safety design for hardware and software, including but not limited to redundancy, fire control and malfunction prevention, appropriate treatment for aging degradation or any other appropriate measures. Because the evaluation of microcomputer software alone is very difficult and impractical, you are responsible for evaluating the safety of the final products or systems manufactured by you.
8. Please contact a Renesas Electronics sales office for details as to environmental matters such as the environmental compatibility of each Renesas Electronics product. You are responsible for carefully and sufficiently investigating applicable laws and regulations that regulate the inclusion or use of controlled substances, including without limitation, the EU RoHS Directive, and using Renesas Electronics products in compliance with all these applicable laws and regulations. Renesas Electronics disclaims any and all liability for damages or losses occurring as a result of your noncompliance with applicable laws and regulations.
9. Renesas Electronics products and technologies shall not be used for or incorporated into any products or systems whose manufacture, use, or sale is prohibited under any applicable domestic or foreign laws or regulations. You shall comply with any applicable export control laws and regulations promulgated and administered by the governments of any countries asserting jurisdiction over the parties or transactions.
10. It is the responsibility of the buyer or distributor of Renesas Electronics products, or any other party who distributes, disposes of, or otherwise sells or transfers the product to a third party, to notify such third party in advance of the contents and conditions set forth in this document.
11. This document shall not be reprinted, reproduced or duplicated in any form, in whole or in part, without prior written consent of Renesas Electronics.
12. Please contact a Renesas Electronics sales office if you have any questions regarding the information contained in this document or Renesas Electronics products.

(Note 1) “Renesas Electronics” as used in this document means Renesas Electronics Corporation and also includes its directly or indirectly controlled subsidiaries.

(Note 2) “Renesas Electronics product(s)” means any product developed or manufactured by or for Renesas Electronics.

(Rev.4.0-1 November 2017)

RENESAS

SALES OFFICES Renesas Electronics Corporation http://www.renesas.com

Refer to "http://www.renesas.com/" for the latest and detailed information.

Renesas Electronics America Inc.
1001 Murphy Ranch Road, Milpitas, CA 95035, U.S.A.
Tel: +1-408-432-8888, Fax: +1-408-434-5351

Renesas Electronics Canada Limited
9251 Yonge Street, Suite 8309 Richmond Hill, Ontario Canada L4C 9T3
Tel: +1-905-237-2004

Renesas Electronics Europe Limited
Dukes Meadow, Millboard Road, Bourne End, Buckinghamshire, SL8 5FH, U.K
Tel: +44-1628-651-700, Fax: +44-1628-651-804

Renesas Electronics Europe GmbH
Arcadiastrasse 10, 40472 Düsseldorf, Germany
Tel: +49-211-6503-0, Fax: +49-211-6503-1327

Renesas Electronics (China) Co., Ltd.
Room 1709 Quantum Plaza, No.27 ZhichunLu, Haidian District, Beijing, 100191 P. R. China
Tel: +86-10-8235-1155, Fax: +86-10-8235-7679

Renesas Electronics (Shanghai) Co., Ltd.
Unit 301, Tower A, Central Towers, 555 Langao Road, Putuo District, Shanghai, 200333 P. R. China
Tel: +86-21-2226-0888, Fax: +86-21-2226-0999

Renesas Electronics Hong Kong Limited
Unit 1601-1611, 16/F., Tower 2, Grand Century Place, 193 Prince Edward Road West, Mongkok, Kowloon, Hong Kong
Tel: +852-2265-6688, Fax: +852 2886-9022

Renesas Electronics Taiwan Co., Ltd.
13F, No. 363, Fu Shing North Road, Taipei 10543, Taiwan
Tel: +886-2-8175-9600, Fax: +886 2-8175-9670

Renesas Electronics Singapore Pte. Ltd.
80 Bendemeer Road, Unit #06-02 Hyflux Innovation Centre, Singapore 339949
Tel: +65-6213-0200, Fax: +65-6213-0300

Renesas Electronics Malaysia Sdn.Bhd.
Unit 1207, Block B, Menara Amcorp, Amcorp Trade Centre, No. 18, Jln Persiaran Barat, 46050 Petaling Jaya, Selangor Darul Ehsan, Malaysia
Tel: +60-3-7955-9390, Fax: +60-3-7955-9510

Renesas Electronics India Pvt. Ltd.
No.777C, 100 Feet Road, HAL 2nd Stage, Indiranagar, Bangalore 560 038, India
Tel: +91-80-67208700, Fax: +91-80-67208777

Renesas Electronics Korea Co., Ltd.
17F, KAMCO Yangjae Tower, 262, Gangnam-daero, Gangnam-gu, Seoul, 06265 Korea
Tel: +82-2-558-3737, Fax: +82-2-558-5338

© 2018 Renesas Electronics Corporation. All rights reserved.

Colophon 7.0