TL6200 Series Tact Switch



Applications / Markets

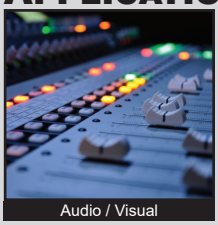
Audio / Visual

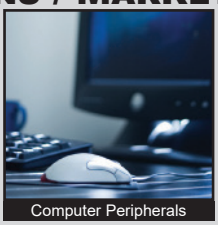
Computer Peripherals

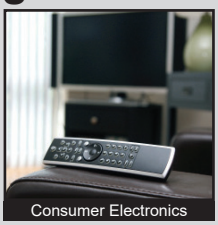
Consumer Electronics


Instrumentation


Telecommunication


Medical Equipment

RoHS

Specifications

Electrical Rating: 50mA @ 24VDC
Life Expectancy: 10,000,000 Cycles
Contact Resistance: 30mΩ Max. (initial)
Insulation Resistance: 10 MΩ Min.
Dielectric Strength: 250VAC for 1 min.
Operating Temperature: -40°C to 160°C
Storage Temperature: -40°C to 160°C
Operating Force: 300 gf
Travel: 1.0mm
Contact Arrangement: SPST
Moisture Protection: IP67

Features & Benefits

- **SMT and Thru Hole Termination Options**
- **IP67 rated**
- **Long Life - 10M cycles**
- **Multiple actuator lengths**

Part Number Configurator

Series	Model	Actuator "L" Dimensions	Actuator Color	Operating Force	Contact Material	Termination Options
TL	6200	**A** - 6.4mm **B** - 8.0mm **C** - 9.5mm **D** - 10.4mm **E** - 11.0mm **F** - 12.0mm **G** - 15.0mm	**B** - Black **W** - White	F300	**Q** - Silver	**G** - Gullwing **P** - Thru Hole

NOTE: Caps for actuator options "B" thru "G" are shipped separately from the base switch and assembled by the customer after the base switch is soldered to the PC board.

Specifications subject to change without notice 9.13.2022

ThruHoleDimensions

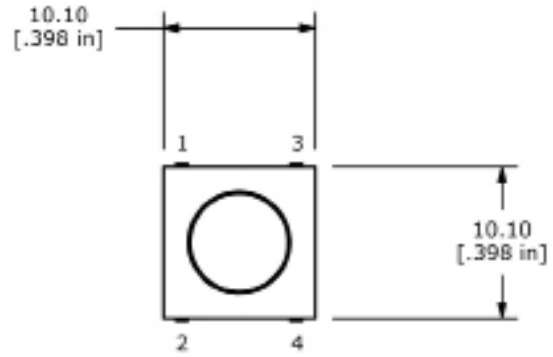

ACTUATOR OPTION	"L" DIMENSION
A	6.4
B	8.0
C	9.5
D	10.4
E	11.0
F	12.0
G	15.0

Actuator Chart

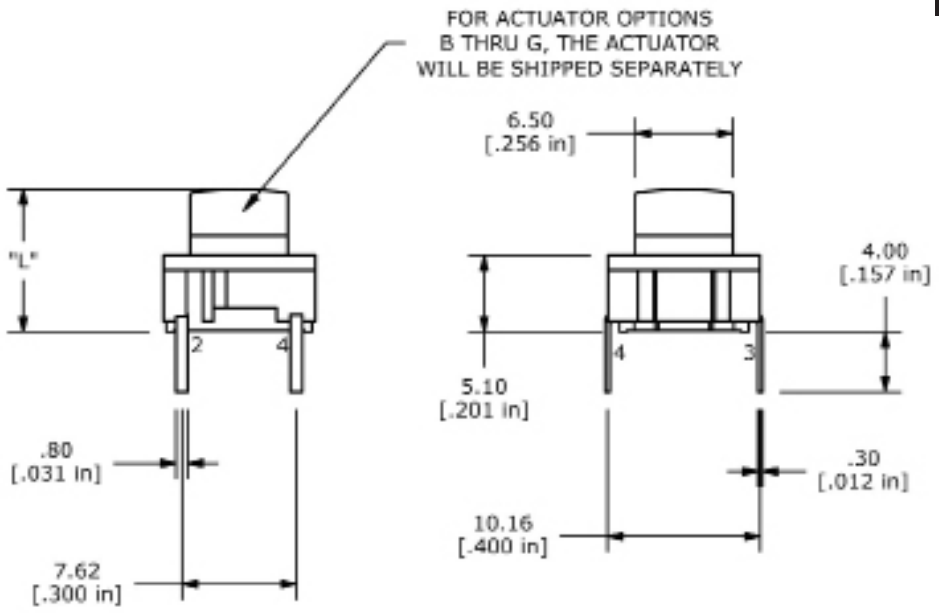

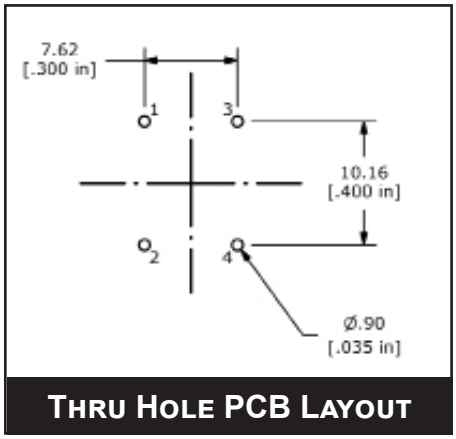

Thru Hole PCB Layout

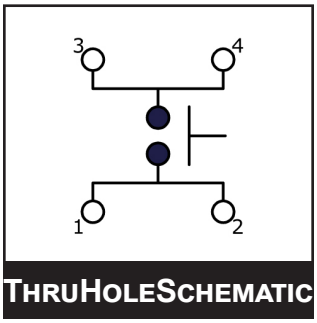

ThruHoleSchematic

SMT Dimensions

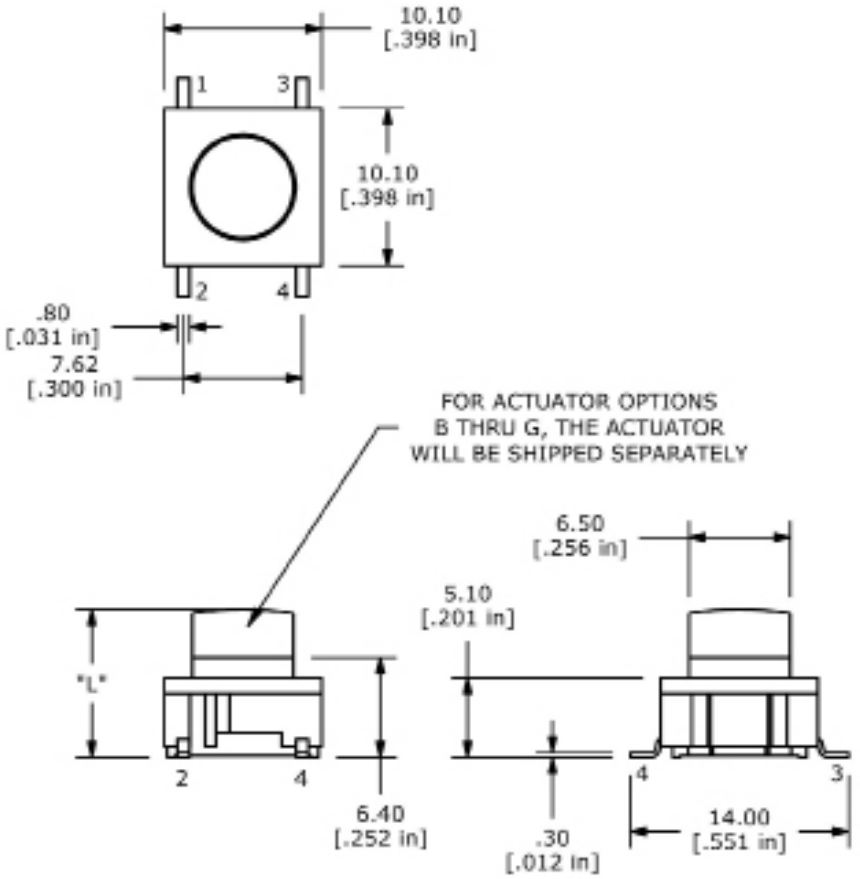

ACTUATOR OPTION	"L" DIMENSION
A	6.4
B	8.0
C	9.5
D	10.4
E	11.0
F	12.0
G	15.0

Actuator Chart

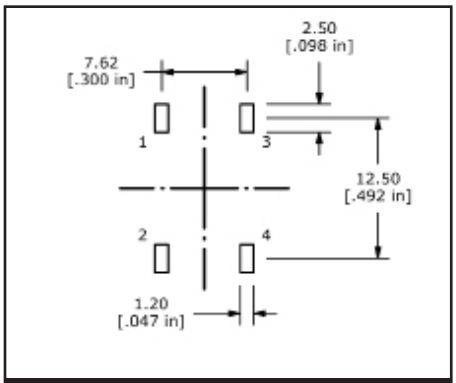

SMT PCB Layout

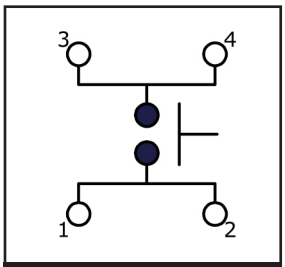

SMT Schematic

Mouser Electronics

Authorized Distributor

Click to View Pricing, Inventory, Delivery & Lifecycle Information:

E-Switch:

TL6200CBLK TL6200BBLK TL6200DBLK TL6200EBLK TL6200GBLK TL6200FBLK TL6200CRED