SZ1SMB Series
Surface Mount

AUTOMOTIVE GRADE HF RoHS

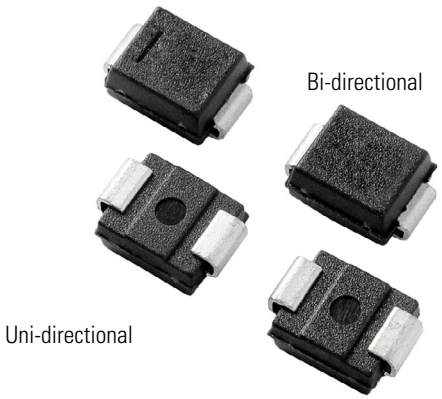

Additional Information

Resources | Accessories | Samples

Agency Approvals

Agency	Agency File Number
	E128662

Maximum Ratings and Thermal Characteristics

Parameter	Symbol	Value	Unit
Peak Power Dissipation (Note 1) @ T_L = 25°C, Pulse Width = 1 ms	P_{PK}	600	W
DC Power Dissipation @ TL = 75°C Measured Zero Lead Length (Note 2) Derate Above 75°C Thermal Resistance from Junction–to–Lead	P_D $R_{\theta JL}$	3.0 40 25	W mW/°C °C/W
DC Power Dissipation (Note 3) @ TA = 25°C Derate Above 25°C Thermal Resistance from Junction–to–Ambient	P_D $R_{\theta JA}$	0.55 4.4 100	W mW/°C °C/W
Forward Surge Current (Note 4) @ T_A = 25°C	I_{FSM}	100	A
Operating and Storage Temperature Range	T_J T_{stg}	-65 to +175	°C

Stresses exceeding those listed in the Maximum Ratings table may damage the componant. If any of these limits are exceeded, device functionality should not be assumed, damage may occur and reliability may be affected.

1. 10/1000 µs, non–repetitive.
2. 1" square copper pad, FR–4 board.
3. FR–4 board, using Littelfuse minimum recommended footprint
4. 1/2 sine wave (or equivalent square wave), PW = 8.3 ms, duty cycle = 4 pulses per minute maximum - For Unidirectional only.

Description

The SZ1SMB series is designed to protect voltage sensitive components from high voltage, high energy transients. They have excellent clamping and high surge capability, as well as fast response time. The SZ1SMB series is supplied in the Littelfuse exclusive, cost-effective, highly reliable package and is ideally suited for use in communication systems, automotive, numerical controls, process controls, medical equipment, business machines, power supplies and many other industrial and consumer applications.

Features & Benefits

- Zener Transient Overvoltage Suppressors
- Working Peak Reverse Voltage Range – 5.0 V to 170 V for uni-directional, and 10 V to 78 V for bi-directional
- Standard Avalanche Breakdown Voltage Range –6.4 V to 209 V for uni-directional, 11.1 V to 95.80 V for bi-directional
- Peak Power – 600 W @ 1.0 ms
- ESD protection of data lines in accordance with IEC 61000-4-2 30kV(Air), 30kV (Contact)
- ESD Rating of Class 3 (> 16 kV) per Human Body Model
- Maximum Clamp Voltage @ Peak Pulse Current
- V_{BR} @ T_J = V_{BR}@25°C x (1+αT x (T_J - 25)) (αT: Temperature Coefficient)
- Low Leakage < 5.0 µA Above 10 V
- Intended for UL 497B Type Protection
- Response Time is Typically < 1.0 ns
- Pb-free means 2nd level interconnect is Pb-free and the terminal finish material is tin(Sn) (IPC/JEDEC J-STD-609A.01)
- SZ Prefix for Automotive and Other Applications Requiring Unique Site and Control Change Requirements; AEC–Q101 Qualified and PPAP Capable

Functional Diagram

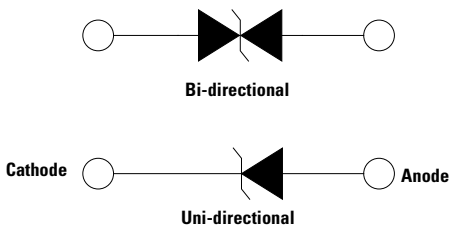

© 2023 Littelfuse, Inc.
Specifications are subject to change without notice.
Revised: GD. 08/22/23

SZ1SMB Series
Surface Mount

I-V Curve Characteristics
(TA = 25°C unless otherwise noted, VF = 3.5 V Max. @ IF (Note 5) = 30 A) **For Uni-directional**

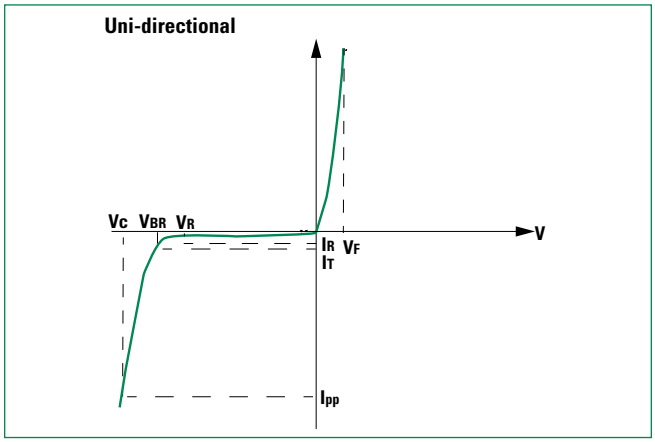

Symbol	Parameter
I_{PP}	Maximum Reverse Peak Pulse Current
V_C	Clamping Voltage @ I_{PP}
V_{RWM}	Working Peak Reverse Voltage
I_R	Maximum Reverse Leakage Current @ V_{RWM}
V_{BR}	Breakdown Voltage @ I_T
I_T	Breakdown Current
V_F	Forward Voltage @ I_F
I_F	Forward Current

5. 1/2 sine wave (or equivalent square wave), PW = 8.3 ms, non–repetitive duty cycle.

I-V Curve Characteristics
(TA = 25°C unless otherwise noted) **For Bi-directional**

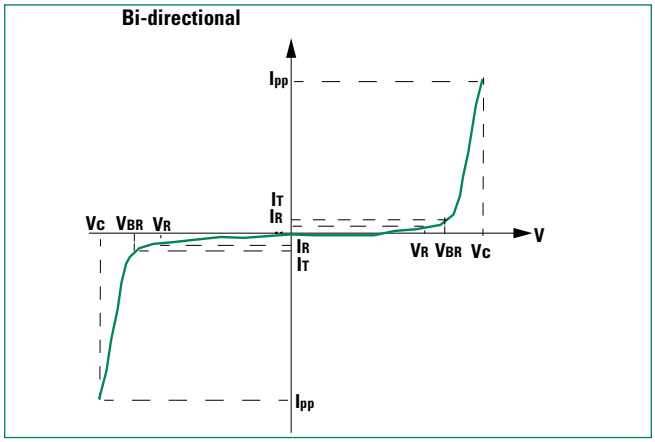

Symbol	Parameter
I_{PP}	Maximum Reverse Peak Pulse Current
V_C	Clamping Voltage @ I_{PP}
V_{RWM}	Working Peak Reverse Voltage
I_R	Maximum Reverse Leakage Current @ V_{RWM}
V_{BR}	Breakdown Voltage @ I_T
I_T	On-State Current

© 2023 Littelfuse, Inc.
Specifications are subject to change without notice.

SZ1SMB Series
Surface Mount

Electrical Characteristics - For Uni-directional

Device	Device Marking	V_{RWM} (Note 6)	I_R @ V_{RWM}	Breakdown Voltage				V_C @ I_{PP} (Note 8)		Capacitance (Typical) (Note 9)
				V_{BR} @ I_T (V) (Note 7)			@ I_T	V_C	I_{PP}	
		Volts	µA	Min	Nom	Max	mA	Volts	Amps	pF
SZ1SMB5.0AT3G	KE	5.0	800	6.40	6.70	7.00	10	9.2	65.2	2700
SZ1SMB6.0AT3G	KG	6.0	800	6.67	7.02	7.37	10	10.3	58.3	2300
SZ1SMB6.5AT3G	KK	6.5	500	7.22	7.60	7.98	10	11.2	53.6	2140
SZ1SMB7.0AT3G	KM	7.0	500	7.78	8.19	8.60	10	12.0	50.0	2005
SZ1SMB7.5AT3G	KP	7.5	100	8.33	8.77	9.21	1.0	12.9	46.5	1890
SZ1SMB8.0AT3G	KR	8.0	50	8.89	9.36	9.83	1.0	13.6	44.1	1780
SZ1SMB8.5AT3G	KT	8.5	10	9.44	9.92	10.40	1.0	14.4	41.7	1690
SZ1SMB9.0AT3G	KV	9.0	5.0	10.00	10.55	11.10	1.0	15.4	39.0	1605
SZ1SMB10AT3G	KX	10	5.0	11.10	11.70	12.30	1.0	17.0	35.3	1460
SZ1SMB11AT3G	KZ	11	5.0	12.20	12.85	13.50	1.0	18.2	33.0	1345
SZ1SMB12AT3G	LE	12	5.0	13.30	14.00	14.70	1.0	19.9	30.2	1245
SZ1SMB13AT3G	LG	13	5.0	14.40	15.15	15.90	1.0	21.5	27.9	1160
SZ1SMB14AT3G	LK	14	5.0	15.60	16.40	17.20	1.0	23.2	25.8	1085
SZ1SMB15AT3G	LM	15	5.0	16.70	17.60	18.50	1.0	24.4	24.0	1020
SZ1SMB16AT3G	LP	16	5.0	17.80	18.75	19.70	1.0	26.0	23.1	965
SZ1SMB17AT3G	LR	17	5.0	18.90	19.90	20.90	1.0	27.6	21.7	915
SZ1SMB18AT3G	LT	18	5.0	20.00	21.05	22.10	1.0	29.2	20.5	870
SZ1SMB20AT3G	LV	20	5.0	22.20	23.35	24.50	1.0	32.4	18.5	790
SZ1SMB22AT3G	LX	22	5.0	24.40	25.65	26.90	1.0	35.5	16.9	730
SZ1SMB24AT3G	LZ	24	5.0	26.70	28.10	29.50	1.0	38.9	15.4	675
SZ1SMB26AT3G	ME	26	5.0	28.90	30.40	31.90	1.0	42.1	14.2	630
SZ1SMB28AT3G	MG	28	5.0	31.10	32.75	34.40	1.0	45.4	13.2	590
SZ1SMB30AT3G	MK	30	5.0	33.30	35.05	36.80	1.0	48.4	12.4	555
SZ1SMB33AT3G	MM	33	5.0	36.70	38.65	40.60	1.0	53.3	11.3	510
SZ1SMB36AT3G	MP	36	5.0	40.00	42.10	44.20	1.0	58.1	10.3	470
SZ1SMB40AT3G	MR	40	5.0	44.40	46.75	49.10	1.0	64.5	9.3	430
SZ1SMB43AT3G	MT	43	5.0	47.80	50.30	52.80	1.0	69.4	8.6	400
SZ1SMB45AT3G	MV	45	5.0	50.00	52.65	55.30	1.0	72.7	8.3	385
SZ1SMB48AT3G	MX	48	5.0	53.30	56.10	58.90	1.0	77.4	7.7	365
SZ1SMB51AT3G	MZ	51	5.0	56.70	59.70	62.70	1.0	82.4	7.3	345
SZ1SMB54AT3G	NE	54	5.0	60.00	63.15	66.30	1.0	87.1	6.9	330
SZ1SMB58AT3G	NG	58	5.0	64.40	67.80	71.20	1.0	93.6	6.4	310
SZ1SMB60AT3G	NK	60	5.0	66.70	70.20	73.70	1.0	96.8	6.2	300
SZ1SMB64AT3G	NM	64	5.0	71.10	74.85	78.60	1.0	103	5.8	280
SZ1SMB70AT3G	NP	70	5.0	77.80	81.90	86.00	1.0	113	5.3	260
SZ1SMB75AT3G	NR	75	5.0	83.30	87.70	92.10	1.0	121	4.9	245
SZ1SMB78AT3G	NT	78	5.0	86.70	91.25	95.80	1	126.0	4.8	235
SZ1SMB85AT3G	NV	85	5.0	94.40	99.20	104.00	1.0	137	4.4	220
SZ1SMB90AT3G	NX	90	5.0	100.00	105.50	111.00	1.0	146	4.1	210
SZ1SMB100AT3G	NZ	100	5.0	111.00	117.00	123.00	1.0	162	3.7	190
SZ1SMB110AT3G	PE	110	5.0	122.00	128.50	135.00	1.0	177	3.4	175
SZ1SMB120AT3G	PG	120	5.0	133.00	140.00	147.00	1.0	193	3.1	160
SZ1SMB130AT3G	PK	130	5.0	144.00	151.50	159.00	1.0	209	2.9	150
SZ1SMB150AT3G	PM	150	5.0	167.00	176.00	185.00	1.0	243	2.5	135
SZ1SMB160AT3G	PP	160	5.0	178.00	187.50	197.00	1.0	259	2.3	125
SZ1SMB170AT3G	PR	170	5.0	189.00	199.00	209.00	1.0	275	2.2	120

© 2023 Littelfuse, Inc.
Specifications are subject to change without notice.
Revised: GD. 08/22/23

SZ1SMB Series
Surface Mount

Electrical Characteristics - For Bi-directional

Device	Device Marking	V_{RWM} (Note 6)	I_R @ V_{RWM}	Breakdown Voltage				V_C @ I_{PP} (Note 8)	
				V_{BR} @ I_T (V) (Note 7)			@ I_T	V_C	I_{PP}
		Volts	µA	MIN	NOM	MAX	mA	Volts	Amps
SZ1SMB10CAT3G	KXC	10	5.0	11.1	11.69	12.27	1.0	17.0	35.3
SZ1SMB11CAT3G	KZC	11	5.0	12.2	12.84	13.5	1.0	18.2	33.0
SZ1SMB12CAT3G	LEC	12	5.0	13.3	14.00	14.7	1.0	19.9	30.2
SZ1SMB13CAT3G	LGC	13	5.0	14.4	15.16	15.9	1.0	21.5	27.9
SZ1SMB14CAT3G	LKC	14	5.0	15.6	16.42	17.2	1.0	23.2	25.8
SZ1SMB15CAT3G	LMC	15	5.0	16.7	17.58	18.5	1.0	24.4	24.0
SZ1SMB16CAT3G	LPC	16	5.0	17.8	18.74	19.7	1.0	26.0	23.1
SZ1SMB17CAT3G	LRC	17	5.0	18.9	19.90	20.9	1.0	27.6	21.7
SZ1SMB18CAT3G	LTC	18	5.0	20.0	21.06	22.1	1.0	29.2	20.5
SZ1SMB20CAT3G	LVC	20	5.0	22.2	23.37	24.5	1.0	32.4	18.5
SZ1SMB22CAT3G	LXC	22	5.0	24.4	25.69	27.0	1.0	35.5	16.9
SZ1SMB24CAT3G	LZC	24	5.0	26.7	28.11	29.5	1.0	38.9	15.4
SZ1SMB26CAT3G	MEC	26	5.0	28.9	30.42	31.9	1.0	42.1	14.2
SZ1SMB28CAT3G	MGC	28	5.0	31.1	32.74	34.4	1.0	45.4	13.2
SZ1SMB30CAT3G	MKC	30	5.0	33.3	35.06	36.8	1.0	48.4	12.4
SZ1SMB33CAT3G	MMC	33	5.0	36.7	38.63	40.6	1.0	53.3	11.3
SZ1SMB36CAT3G	MPC	36	5.0	40.0	42.11	44.2	1.0	58.1	10.3
SZ1SMB40CAT3G	MRC	40	5.0	44.4	46.74	49.1	1.0	64.5	9.3
SZ1SMB43CAT3G	MTC	43	5.0	47.8	50.32	52.8	1.0	69.4	8.6
SZ1SMB45CAT3G	MVC	45	5.0	50.0	52.63	55.3	1.0	72.2	8.3
SZ1SMB48CAT3G	MXC	48	5.0	53.3	56.11	58.9	1.0	77.4	7.7
SZ1SMB51CAT3G	MZC	51	5.0	56.7	59.69	62.7	1.0	82.4	7.3
SZ1SMB54CAT3G	NEC	54	5.0	60.0	63.16	66.32	1.0	87.1	6.9
SZ1SMB58CAT3G	NGC	58	5.0	64.4	67.79	71.18	1.0	93.6	6.4
SZ1SMB60CAT3G	NKC	60	5.0	66.7	70.21	73.72	1.0	96.8	6.2
SZ1SMB64CAT3G	NMC	64	5.0	71.1	74.84	78.58	1.0	103	5.8
SZ1SMB70CAT3G	NPC	70	5.0	77.80	81.90	86.00	1	113.0	5.3
SZ1SMB75CAT3G	NRC	75	5.0	83.3	91.65	92.07	1.0	121	4.9
SZ1SMB78CAT3G	NTC	78	5.0	86.70	91.25	95.80	1	126.0	4.8

Notes:
6. A transient suppressor is normally selected according to the working peak reverse voltage (V_{RWM}), which should be equal to or greater than the DC or continuous peak operating voltage level.
7. V_{BR} measured at pulse test current I_T at an ambient temperature of 25°C.
8. Surge current waveform per Figure 1 and derate per Figure 3 of the General Data – 600 Watt at the beginning of this group.
9. Bias Voltage = 0 V, F = 1 MHz, T_J = 25°C

© 2023 Littelfuse, Inc.
Specifications are subject to change without notice.
Revised: GD. 08/22/23

SZ1SMB Series
Surface Mount

Ratings and Characteristic Curves

Figure 1.
Pulse Rating Curve

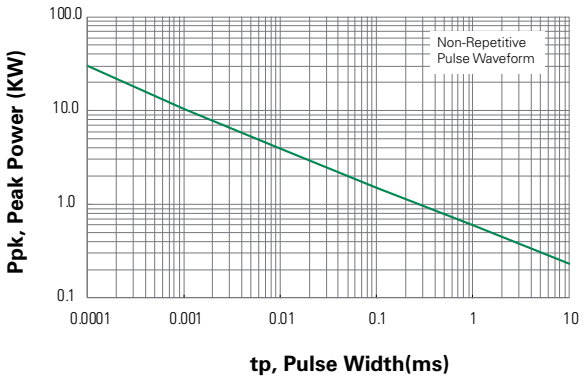

Figure 2.
Pulse Waveform

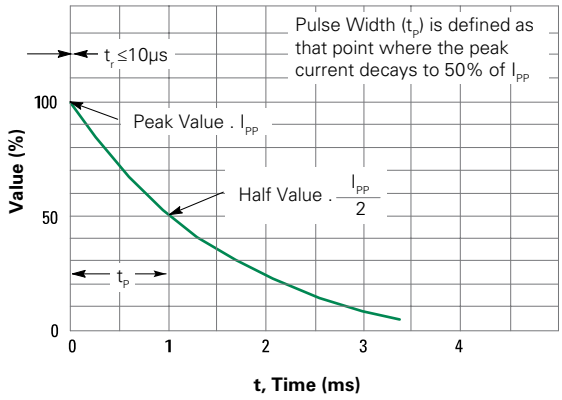

Figure 3.
Surge Derating Curve

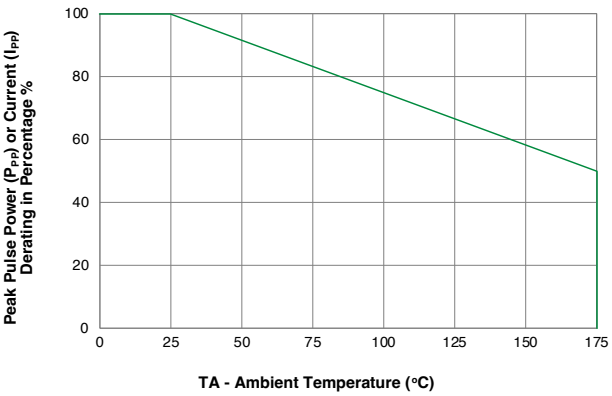

Figure 4.
Typical Junction Capacitance vs. Bias Voltage

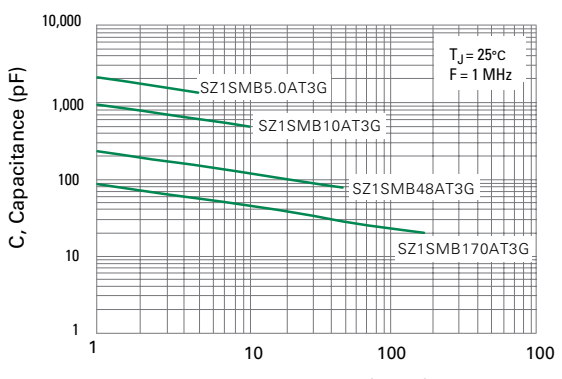

Figure 5.
Typical Junction Capacitance vs. Bias Voltage

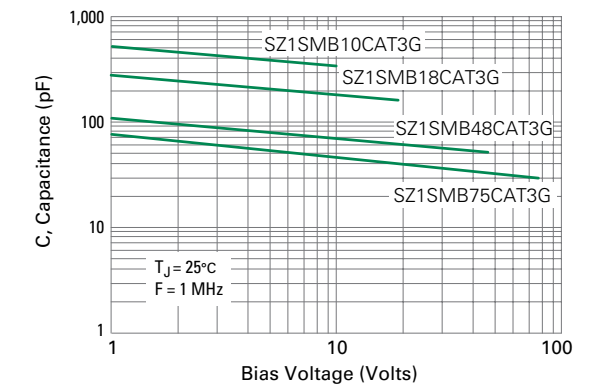

Figure 6.
Typical Protection Circuit

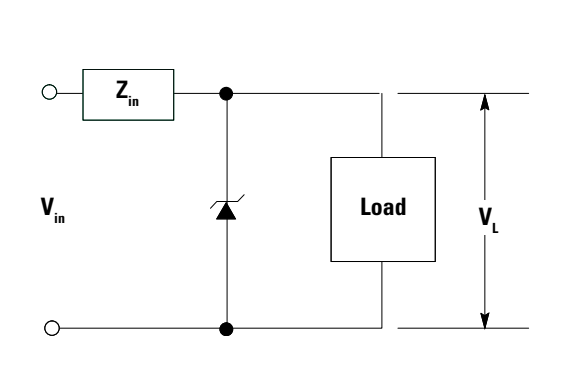

© 2023 Littelfuse, Inc.
Specifications are subject to change without notice.
Revised: GD. 08/22/23

SZ1SMB Series
Surface Mount

Soldering Parameters

Reflow Condition		Lead–free assembly
Pre Heat	**-Temperature Min ($T_{s(min)}$)**	150°C
	-Temperature Max ($T_{s(max)}$)	200°C
	-Time (min to max) (t_s)	60 – 120 secs
Average ramp up rate (Liquidus Temp (T_L) to peak		3°C/second max
$T_{S(max)}$ to T_L - Ramp-up Rate		3°C/second max
Reflow	**-Temperature (T_L) (Liquidus)**	217°C
	-Time (min to max) (t_L)	60 – 150 seconds
Peak Temperature (T_P)		$260^{+0/-5}$ °C
Time within 5°C of actual peak Temperature (t_p)		30 seconds max
Ramp-down Rate		6°C/second max
Time 25°C to peak Temperature (T_P)		8 minutes max.
Do not exceed		260°C

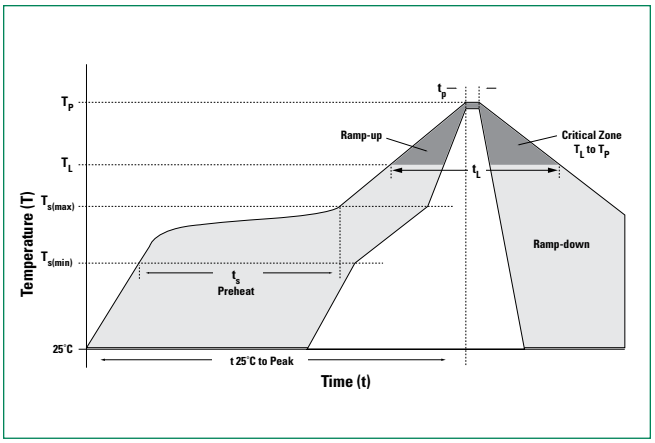

Physical Specifications

Weight	0.00326 ounce, 0.1015 grams
Case	JEDEC DO214AA. Void-Free, Transfer-Molded, Thermosetting Plastic Epoxy Meets UL 94V-0
Polarity	Color band denotes cathode for unidirectional components.
Terminal	Matte Tin-plated leads, Solderable per, JESD22-B102

Environmental Specifications

High Temp. Storage	JESD22-A103
HTRB	JESD22-A108
Temperature Cycling	JESD22-A104
MSL	JEDEC-J-STD-020, Level 1
H3TRB	JESD22-A101
RSH	JESD22-A111

Dimensions

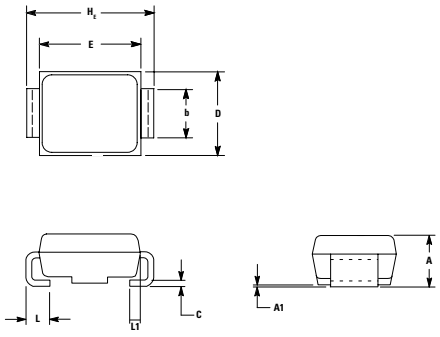

Dim	Inches			Millimeters		
	Min	Nom	Max	Min	Nom	Max
A	0.077	0.091	0.097	1.95	2.30	2.47
A1	0.002	0.004	0.008	0.05	0.10	0.20
b	0.077	0.080	0.087	1.96	2.03	2.20
c	0.006	0.009	0.012	0.15	0.23	0.31
D	0.130	0.140	0.156	3.30	3.56	3.95
E	0.160	0.170	0.181	4.06	4.32	4.60
HE	0.205	0.214	0.220	5.21	5.44	5.60
L	0.030	0.040	0.063	0.76	1.02	1.60
L1	0.020 REF			0.51 REF		

Soldering Footprint

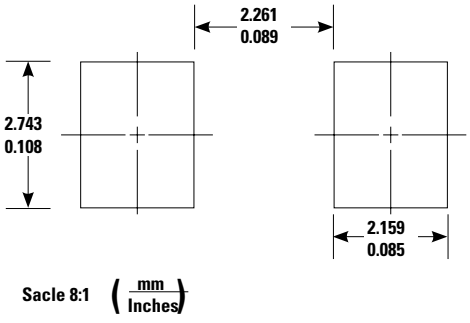

Ordering Information

Device	Package	Shipping
SZ1SMBxxAT3G	SMB (Pb–Free)	2,500 / Tape & Reel
SZ1SMBxxCAT3G	SMB (Pb–Free)	2,500 / Tape & Reel

© 2023 Littelfuse, Inc.
Specifications are subject to change without notice.
Revised: GD. 08/22/23

SZ1SMB Series
Surface Mount

Part Marking System



XXXX =Device Code (max four digits)
Y =Year
M =Month
A =Assembly Location
WW =Lot Code

Part Numbering System

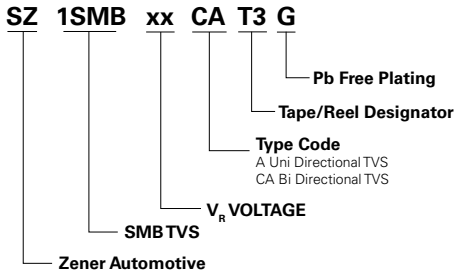

Tape and Reel Specification

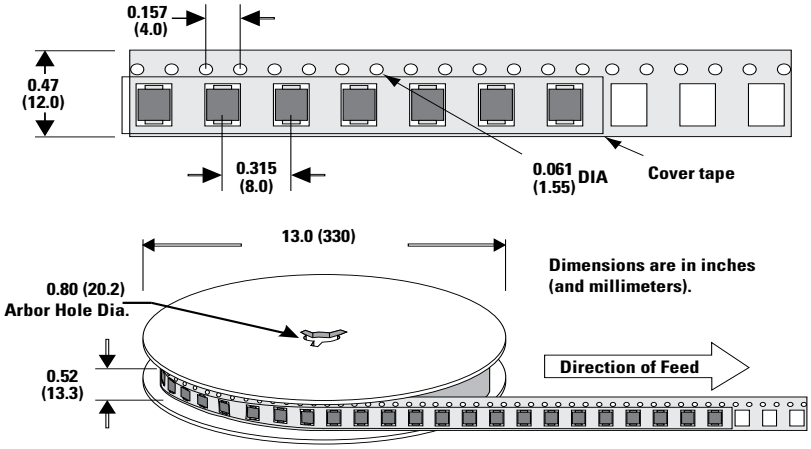

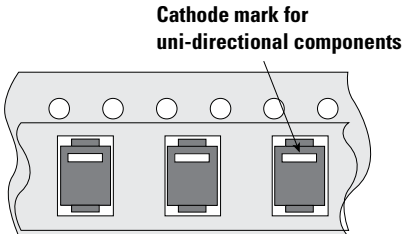

Disclaimer Notice - Information furnished is believed to be accurate and reliable. However, users should independently evaluate the suitability of and test each product selected for their own applications. Littelfuse products are not designed for, and may not be used in, all applications. Read complete Disclaimer Notice at http://www.littelfuse.com/disclaimer-electronics.

© 2023 Littelfuse, Inc.
Specifications are subject to change without notice.
Revised: GD. 08/22/23