FEATURES SELECTION GUIDE

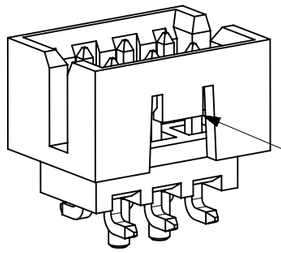

(2) CENTER LOCK

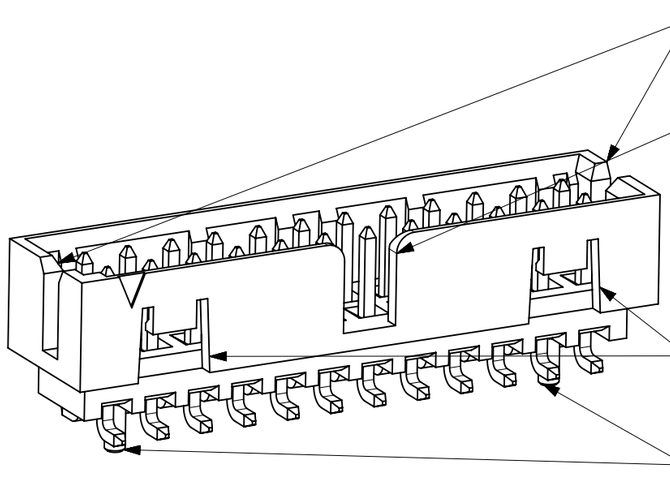

(3) DUAL SIDE SLOTS

(4) CENTER POLARIZATION

(1) DUAL LOCKS

(5) PEGS

PLATING MEASUREMENT POINT
2.50

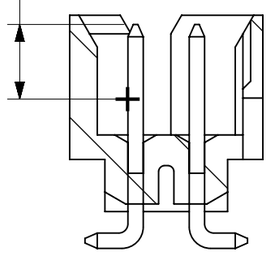

CIRCUIT SIZE	FEATURES					
	FRICTION LOCKS		DUAL SIDE SLOTS	CENTER POLARIZATION	PEGS	SHEET NO
	(1) DUAL	(2) CENTER	(3)	(4)	(5)	
4	N.A	N.A	YES	N.A	N.A	2 - 3
	N.A	YES	YES	N.A	N.A	
6	N.A	N.A	YES	N.A	N.A	4 - 5
	N.A	N.A	YES	N.A	YES	
	N.A	N.A	YES	YES	N.A	
	N.A	YES	YES	N.A	N.A	
	N.A	YES	YES	N.A	YES	
8 TO 12	N.A	N.A	YES	YES	YES	6 - 7
	N.A	N.A	YES	YES	N.A	
	N.A	YES	YES	N.A	N.A	
	N.A	YES	YES	N.A	YES	
14 TO 50	YES	N.A	YES	YES	N.A	8 - 11
	YES	N.A	YES	YES	YES	

THIS DRAWING CONTAINS INFORMATION THAT IS PROPRIETARY TO MOLEX ELECTRONIC TECHNOLOGIES, LLC AND SHOULD NOT BE USED WITHOUT WRITTEN PERMISSION

FUNCTIONAL SYMBOLS
EA = 0
EC = 0
ED = 0
DIVISIONAL SYMBOLS

DIMENSION UNITS: mm
SCALE: NTS

GENERAL TOLERANCES (UNLESS SPECIFIED)

	MM	INCH
4 PLACES	±	±
3 PLACES	±	±
2 PLACES	± 0.200	±
1 PLACE	±	±
0 PLACES	±	±
ANGULAR TOL	± 3°	

DRAFT WHERE APPLICABLE MUST REMAIN WITHIN DIMENSIONS

CURRENT REV DESC: ADDING NEW PART NUMBER

STATUS: Production
DRWN: Meghraj Boodagatti 2026-06-04
CHK'D: Meghraj Boodagatti 2026-06-10
APPR: Saravanakumar Murugesan 2026-06-10

INITIAL REVISION:
DRWN: GMENARLY 2015-05-22
APPR: KHLIM 2015-09-22

THIRD ANGLE PROJECTION | DRAWING: A3-SIZE | SERIES: 87832

molex

MILLIGRID
2MM PITCH, SMT VERTICAL SHROUDED HEADER

PRODUCT CUSTOMER DRAWING

DOCUMENT NUMBER	DOC TYPE	DOC PART	REVISION
SD-87832-0001	PSD	001	A25

MATERIAL NUMBER	CUSTOMER	SHEET NUMBER
	GENERAL MARKET	1 OF 13

FORMAT: Mel-lega-TC-tb-prod-A3
REVISION: B
DATE: 2023/10/23

4 CIRCUITS

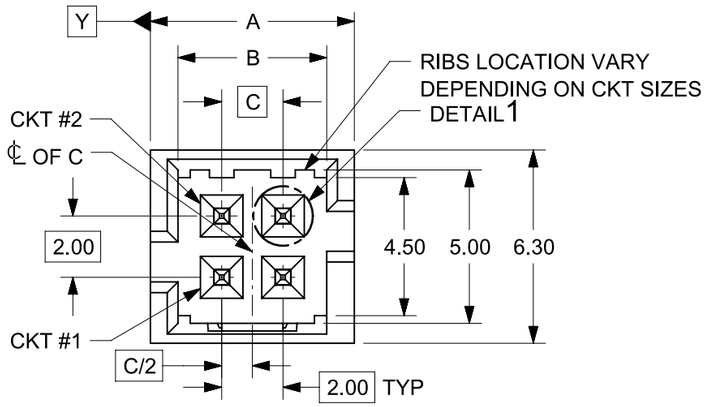

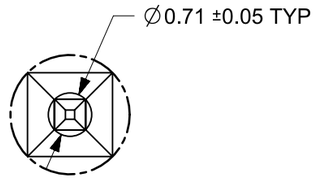

DETAIL 1

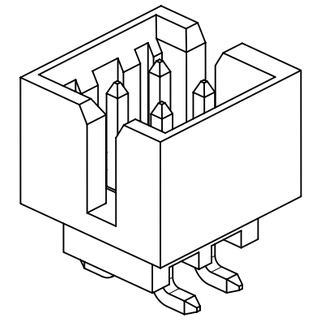

ISO VIEW OF HEADER
WITH ONLY DUAL SLOTS

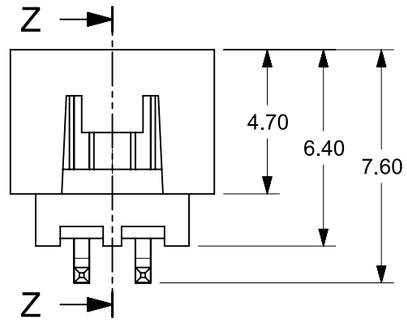

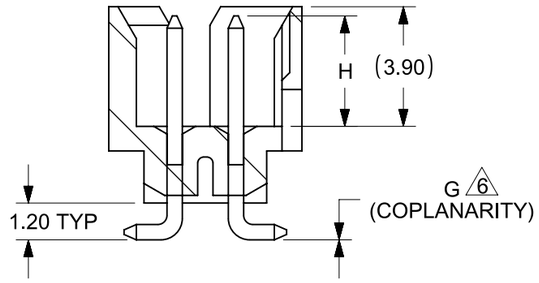

SECTION Z-Z

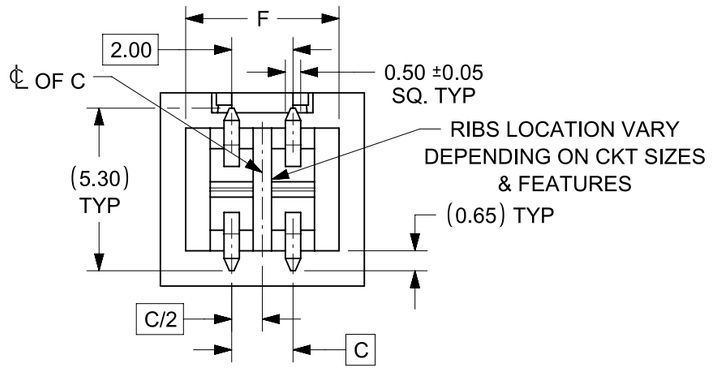

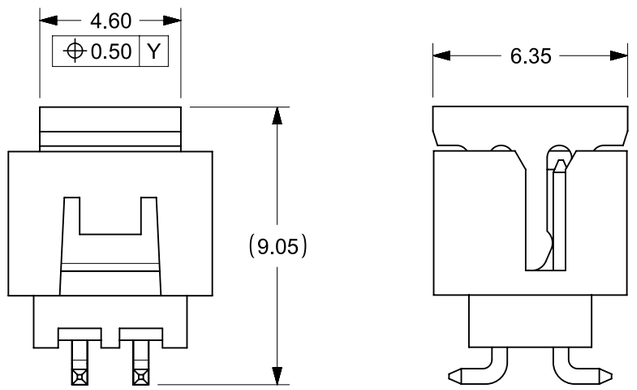

VIEW FOR HEADER WITH CAP

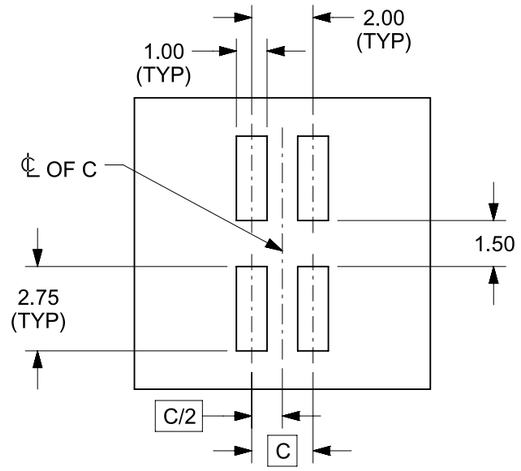

RECOMMENDED PCB LAYOUT

NOTES:
1. MATERIALS:
   HOUSING & CAP: 30% GF, NYLON, UL94V-0, COLOR: BLACK
   PIN: 0.50mm SQ. PHOSPHOR BRONZE
2. FINISHES: REFER TO PLATING OPTIONS
3. PRODUCT SPECIFICATION: PS-87831-027
4. PACKAGING SPECIFICATION: SEE PACKAGING SPECS TABLE ON SHEET 12
5. MATES WITH: A. MOLEX CRIMP RECEPTACLE HOUSING: 51110 SERIES
   AND CRIMP TERMINAL: 50394 SERIES
   B. MOLEX 2mm MILLIGRID DUAL ROW IDT: 87568 SERIES
   C. MOLEX 2mm MILLIGRID DUAL ROW RECEPTACLE:
   79107 (GOLD PLATED), 78787 (TIN PLATED)
6. COPLANARITY IS TO BE MEASURED BY RESTING THE SOLDERTAIL ON A GAUGE SURFACE
7. BEND DEPRESSION ON SMT TAIL IS ACCEPTABLE SO LONG AS IT DOES NOT AFFECT THE OVERALL COPLANARITY
8. TOP SURFACE OF CAP TO BE FLAT FOR THE PURPOSE OF PICK & PLACE BY VACUUM SUCTION NOZZLE

THIS DRAWING CONTAINS INFORMATION THAT IS PROPRIETARY TO MOLEX ELECTRONIC TECHNOLOGIES, LLC AND SHOULD NOT BE USED WITHOUT WRITTEN PERMISSION

FUNCTIONAL SYMBOLS: FA = 0, FC = 0, FP = 0
DIVISIONAL SYMBOLS

DIMENSION UNITS	SCALE
mm	NTS

GENERAL TOLERANCES (UNLESS SPECIFIED)

	MM	INCH
4 PLACES	±	±
3 PLACES	±	±
2 PLACES	± 0.200	±
1 PLACE	±	±
0 PLACES	±	±
ANGULAR TOL	± 3°	

DRAFT WHERE APPLICABLE MUST REMAIN WITHIN DIMENSIONS

CURRENT REV DESC: ADDING NEW PART NUMBER

STATUS: Production
DRWN: Meghraj Boodagatti 2026-06-04
CHK'D: Meghraj Boodagatti 2026-06-10
APPR: Saravanakumar Murugesan 2026-06-10

INITIAL REVISION:
DRWN: GMENARLY 2015-05-22
APPR: KHLIM 2015-09-22

THIRD ANGLE PROJECTION | DRAWING: A3-SIZE | SERIES: 87832

molex

MILLIGRID
2MM PITCH, SMT VERTICAL SHROUDED HEADER

PRODUCT CUSTOMER DRAWING

DOCUMENT NUMBER	DOC TYPE	DOC PART	REVISION
SD-87832-0001	PSD	001	A25

MATERIAL NUMBER	CUSTOMER	SHEET NUMBER
	GENERAL MARKET	2 OF 13

FORMAT: Megha_PSC-b-prod-A3
REVISION: B
DATE: 2023/10/23

4 CIRCUITS

CKT SIZE	ASSY P/N WITHOUT CAP IN TUBE	ASSY P/N WITH CAP IN TUBE	ASSY P/N WITH CAP IN T&R	T&R OPTIONS (SEE SHEET 12)	PLATING OPTIONS	FRICTION LOCKS		DUAL SIDE SLOTS	CENTER POLARIZATION	PEGS	DIMENSION							
						DUAL	CENTER				A	B	C	D	E	F	G (COPLAN)	H
4	87832-0460	87832-0462	87832-5162	1	1	N.A	N.A	YES	N.A	N.A	6.65	4.85	2.00	N.A	N.A	5.00	0.10	3.60±0.20
	87832-0420	87832-0422	87832-5122	1	2													
	87832-0421	87832-0423	87832-5123	1	3													
	87832-0470	87832-0472	87832-5172	1	4													
	87832-0410	87832-0408	87832-0406	1	2	N.A	YES	YES	N.A	N.A							0.10	
			87832-5106	2	2													
	87832-0411	87832-0409	87832-0407	1	3													
	87832-0404	N.A	N.A	N.A	2												0.10	

PLATING OPTIONS:

1 - 0.05-0.13µm/2-5µin GOLD IN CONTACT AREA AND
1.88µm/75µin MIN. MATTE TIN IN SOLDER TAIL AREA OVER
1.27µm/50µin MIN. NICKEL OVERALL.

2 - 0.38µm/15µin MIN. GOLD IN CONTACT AREA AND
1.88um/75µin MIN. MATTE TIN IN SOLDER TAIL AREA OVER
1.27µm/50µin MIN. NICKEL OVERALL.

3 - 0.76µm/30µin MIN. GOLD IN CONTACT AREA AND
1.88µm/75µin MIN. MATTE TIN IN SOLDER TAIL AREA OVER
1.27µm/50µin MIN. NICKEL OVERALL.

4 - 2.50µm/100µin MIN. MATTE TIN OVER 1.25µm/50µin MIN. NICKEL OVERALL.

THIS DRAWING CONTAINS INFORMATION THAT IS PROPRIETARY TO MOLEX ELECTRONIC TECHNOLOGIES, LLC AND SHOULD NOT BE USED WITHOUT WRITTEN PERMISSION

FUNCTIONAL SYMBOLS: FA = 0, FC = 0, FP = 0

DIVISIONAL SYMBOLS

DIMENSION UNITS: mm | SCALE: NTS

GENERAL TOLERANCES (UNLESS SPECIFIED)

	MM	INCH
4 PLACES	±	±
3 PLACES	±	±
2 PLACES	± 0.200	±
1 PLACE	±	±
0 PLACES	±	±
ANGULAR TOL	± 3°	

DRAFT WHERE APPLICABLE MUST REMAIN WITHIN DIMENSIONS

CURRENT REV DESC: ADDING NEW PART NUMBER

STATUS: Production
DRWN: Meghraj Boodagatti 2026-06-04
CHK'D: Meghraj Boodagatti 2026-06-10
APPR: Saravanakumar Murugesan 2026-06-10

INITIAL REVISION:
DRWN: GMENARLY 2015-05-22
APPR: KHLIM 2015-09-22

THIRD ANGLE PROJECTION | DRAWING: A3-SIZE | SERIES: 87832

molex

MILLIGRID
2MM PITCH, SMT VERTICAL SHROUDED HEADER

PRODUCT CUSTOMER DRAWING

DOCUMENT NUMBER	DOC TYPE	DOC PART	REVISION
SD-87832-0001	PSD	001	A25

MATERIAL NUMBER	CUSTOMER	SHEET NUMBER
	GENERAL MARKET	3 OF 13

FORMAT: Meghraj-FC-tb-prod-A3
REVISION: B
DATE: 2023/10/23

6 CIRCUITS

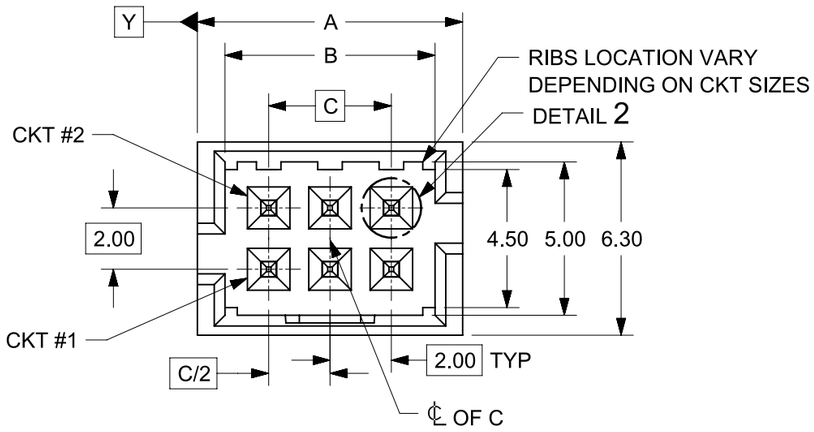

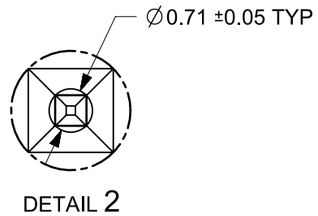

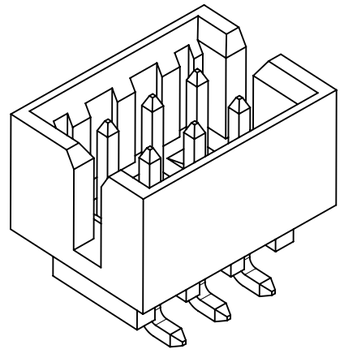

VIEW FOR HEADER WITH
ONLY DUAL SLOTS

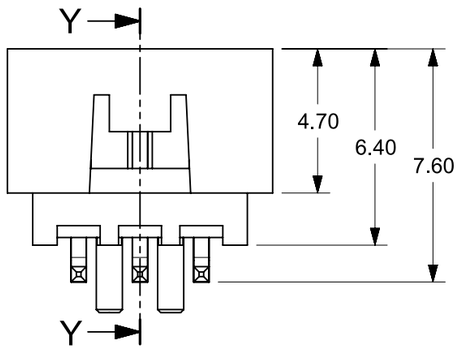

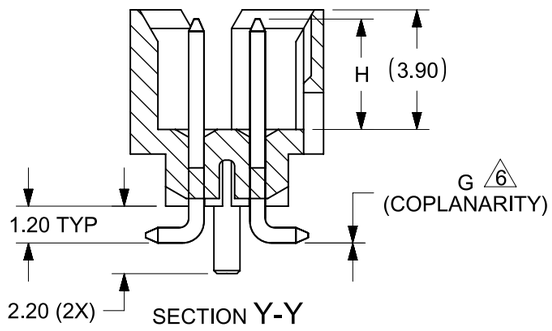

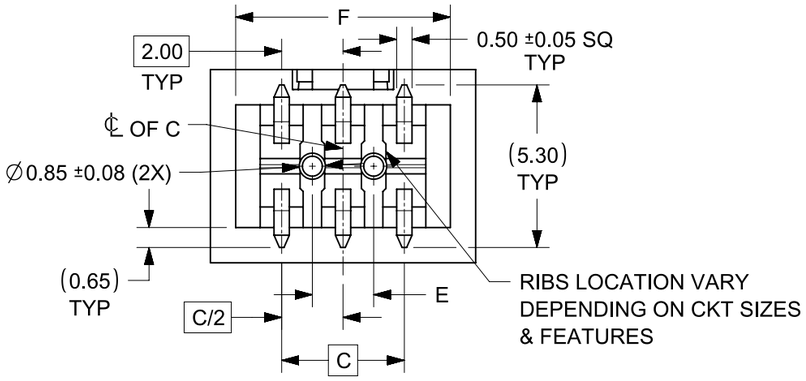

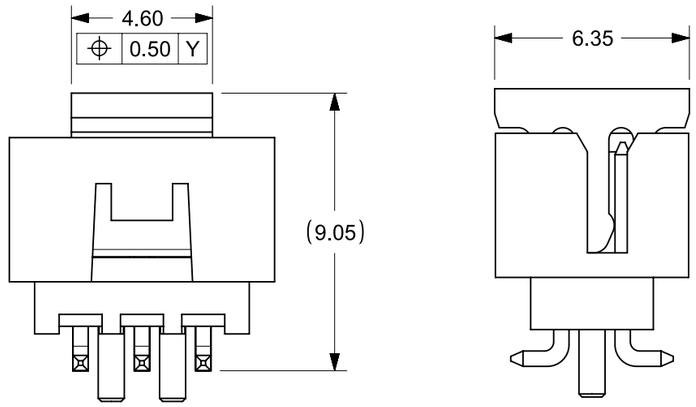

VIEW FOR HEADER WITH CAP

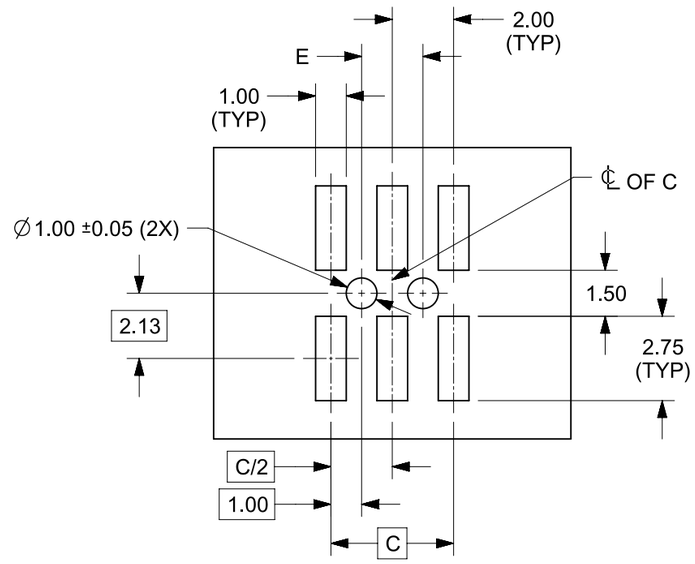

RECOMMENDED PCB LAYOUT

NOTES:
1. MATERIALS:
   HOUSING & CAP: 30% GF, NYLON, UL94V-0, COLOR: BLACK
   PIN: 0.50mm SQ. PHOSPHOR BRONZE
2. FINISHES: REFER TO PLATING OPTIONS
3. PRODUCT SPECIFICATION: PS-87831-027
4. PACKAGING SPECIFICATION: SEE PACKAGING SPECS TABLE ON SHEET 12
5. MATES WITH: A. MOLEX CRIMP RECEPTACLE HOUSING: 51110 SERIES
   AND CRIMP TERMINAL: 50394 SERIES
   B. MOLEX 2mm MILLIGRID DUAL ROW IDT: 87568 SERIES
   C. MOLEX 2mm MILLIGRID DUAL ROW RECEPTACLE:
   79107 (GOLD PLATED), 78787 (TIN PLATED)
6. COPLANARITY IS TO BE MEASURED BY RESTING THE SOLDERTAIL ON A GAUGE SURFACE
7. BEND DEPRESSION ON SMT TAIL IS ACCEPTABLE SO LONG AS IT DOES NOT AFFECT THE OVERALL COPLANARITY
8. TOP SURFACE OF CAP TO BE FLAT FOR THE PURPOSE OF PICK & PLACE BY VACUUM SUCTION NOZZLE

THIS DRAWING CONTAINS INFORMATION THAT IS PROPRIETARY TO MOLEX ELECTRONIC TECHNOLOGIES, LLC AND SHOULD NOT BE USED WITHOUT WRITTEN PERMISSION

FUNCTIONAL SYMBOLS	DIMENSION UNITS	SCALE	CURRENT REV DESC: ADDING NEW PART NUMBER	molex
FA = 0	mm	NTS		
FC = 0	GENERAL TOLERANCES (UNLESS SPECIFIED)			MILLIGRID 2MM PITCH, SMT VERTICAL SHROUDED HEADER
FP = 0	MM	INCH	STATUS: Production	
DIVISIONAL SYMBOLS	4 PLACES ±	±	DRWN: Meghraj Boodagatti 2026-06-04	
	3 PLACES ±	±	CHK'D: Meghraj Boodagatti 2026-06-10	PRODUCT CUSTOMER DRAWING
	2 PLACES ± 0.200	±	APPR: Saravanakumar Murugesan 2026-06-10	
	1 PLACE ±	±	INITIAL REVISION:	DOCUMENT NUMBER: SD-87832-0001
	0 PLACES ±	±	DRWN: GMENARLY 2015-05-22	DOC TYPE: PSD; DOC PART: 001; REVISION: A25
	ANGULAR TOL ± 3°		APPR: KHLIM 2015-09-22	
	DRAFT WHERE APPLICABLE MUST REMAIN WITHIN DIMENSIONS		THIRD ANGLE PROJECTION; DRAWING: A3-SIZE; SERIES: 87832	MATERIAL NUMBER; CUSTOMER: GENERAL MARKET; SHEET NUMBER: 4 OF 13

FORMAT: Mel-logo-FC-tb-prod-A3
REVISION: B
DATE: 2023/10/23

6 CIRCUITS

CKT SIZE	ASSY P/N WITHOUT CAP IN TUBE	ASSY P/N WITH CAP IN TUBE	ASSY P/N WITH CAP IN T&R	ASSY P/N WITHOUT CAP IN T&R	T&R OPTIONS (SEE SHEET 12)	PLATING OPTIONS	FRICTION LOCKS		DUAL SIDE SLOTS	CENTER POLARIZATION	PEGS	DIMENSION							
							DUAL	CENTER				A	B	C	D	E	F	G (COPLAN)	H
6	87832-0660	87832-0662	87832-5262		1	1	N.A	N.A	YES	N.A	YES	8.65	6.85	4.00	N.A	2.00	7.00	0.10	3.60±0.20
	87832-0620	87832-0622	87832-5222	87832-5230	1	2													
	87832-0621	87832-0623	87832-5223		1	3													
	87832-0670	87832-0672	87832-5272		1	4													
	87832-0612	87832-0616	87832-0614		1	2	N.A	N.A	YES	N.A	N.A							0.10	3.60±0.20
	87832-0613	87832-0617	87832-0615		1	3	N.A	N.A	YES	YES	N.A								
	87832-0624	87832-0626	87832-0628		1	2	N.A	YES	YES	N.A	N.A							0.10	3.60±0.15
	87832-0625	87832-0627	87832-0629		1	3													
	87832-0610	87832-0608	87832-0606		1	2	N.A	YES	YES	N.A	YES							0.10	3.60±0.20
	87832-0611	87832-0609	87832-0607		1	3													
	87832-0604	N.A	N.A		N.A	2	N.A	YES	YES	N.A	YES							0.10	3.60±0.20

PLATING OPTIONS:

1 - 0.05-0.13µm/2-5µin GOLD IN CONTACT AREA AND
1.88µm/75µin MIN. MATTE TIN IN SOLDER TAIL AREA OVER
1.27µm/50µin MIN. NICKEL OVERALL.

2 - 0.38µm/15µin MIN. GOLD IN CONTACT AREA AND
1.88µm/75µin MIN. MATTE TIN IN SOLDER TAIL AREA OVER
1.27µm/50µin MIN. NICKEL OVERALL.

3 - 0.76µm/30µin MIN. GOLD IN CONTACT AREA AND
1.88µm/75µin MIN. MATTE TIN IN SOLDER TAIL AREA OVER
1.27µm/50µin MIN. NICKEL OVERALL.

4 - 2.50µm/100µin MIN. MATTE TIN OVER 1.25µm/50µin MIN. NICKEL OVERALL.

THIS DRAWING CONTAINS INFORMATION THAT IS PROPRIETARY TO MOLEX ELECTRONIC TECHNOLOGIES, LLC AND SHOULD NOT BE USED WITHOUT WRITTEN PERMISSION

FUNCTIONAL SYMBOLS: FA = 0, FC = 0, FP = 0

DIVISIONAL SYMBOLS

DIMENSION UNITS: mm | SCALE: NTS

GENERAL TOLERANCES (UNLESS SPECIFIED)

	MM	INCH
4 PLACES	±	±
3 PLACES	±	±
2 PLACES	± 0.200	±
1 PLACE	±	±
0 PLACES	±	±
ANGULAR TOL	± 3°	

DRAFT WHERE APPLICABLE MUST REMAIN WITHIN DIMENSIONS

CURRENT REV DESC: ADDING NEW PART NUMBER

STATUS: Production
DRWN: Meghraj Boodagatti 2026-06-04
CHK'D: Meghraj Boodagatti 2026-06-10
APPR: Saravanakumar Murugesan 2026-06-10

INITIAL REVISION:
DRWN: GMENARLY 2015-05-22
APPR: KHLIM 2015-09-22

THIRD ANGLE PROJECTION | DRAWING: A3-SIZE | SERIES: 87832

molex

MILLIGRID
2MM PITCH, SMT VERTICAL SHROUDED HEADER

PRODUCT CUSTOMER DRAWING

DOCUMENT NUMBER	DOC TYPE	DOC PART	REVISION
SD-87832-0001	PSD	001	A25

MATERIAL NUMBER	CUSTOMER	SHEET NUMBER
	GENERAL MARKET	5 OF 13

FORMAT: Meghraj-TC-tb-prod-A3
REVISION: B
DATE: 2023/10/23

8 TO 12 CIRCUITS

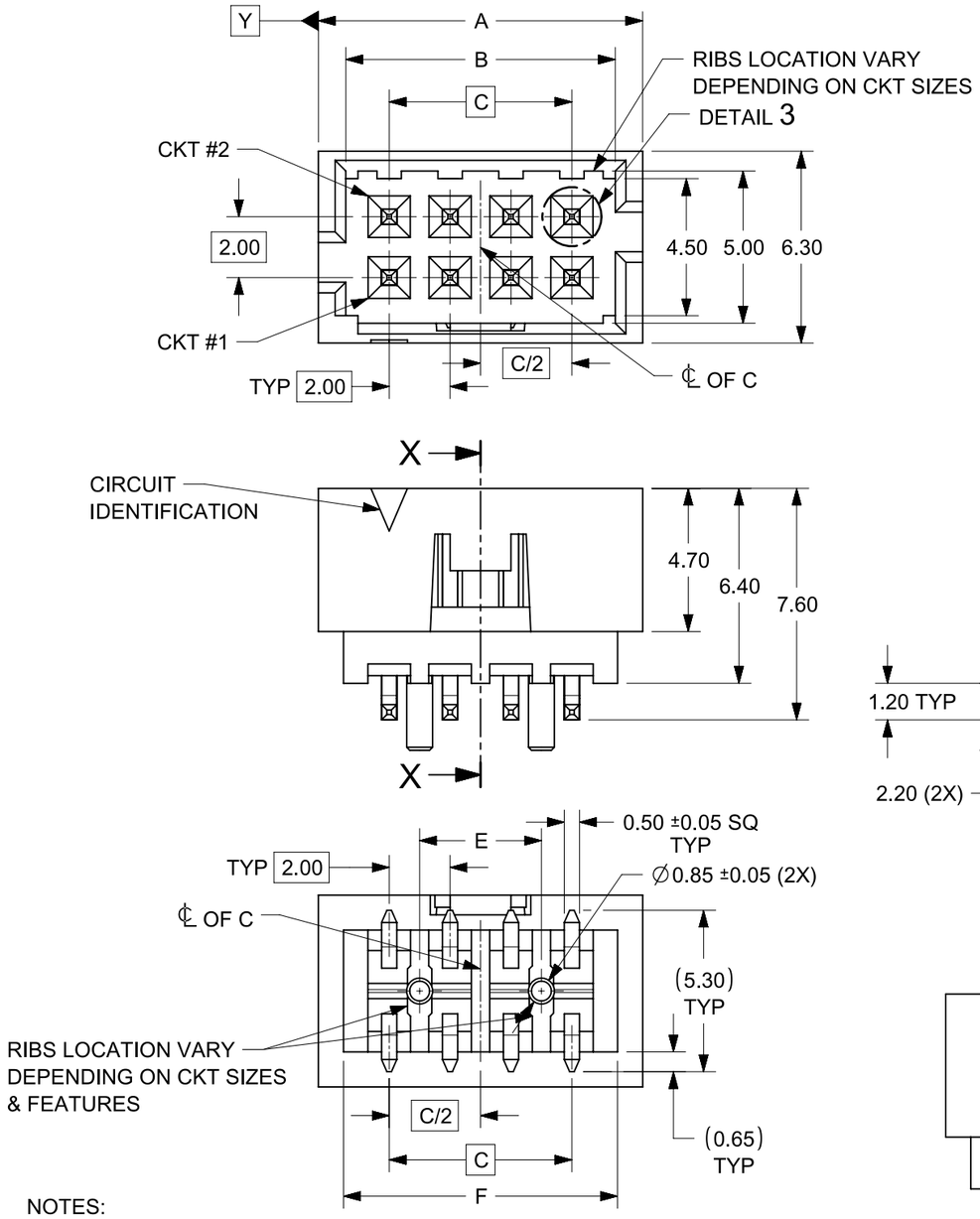

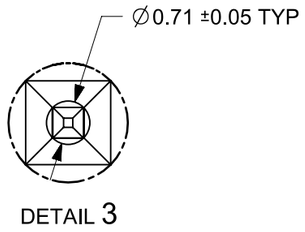

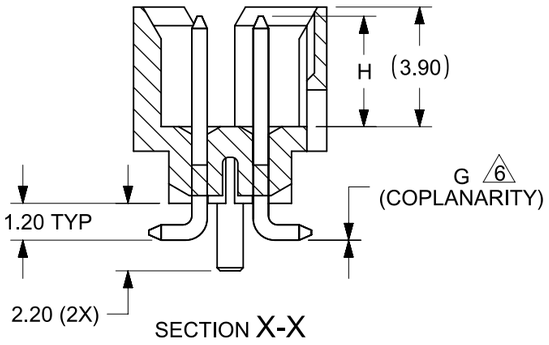

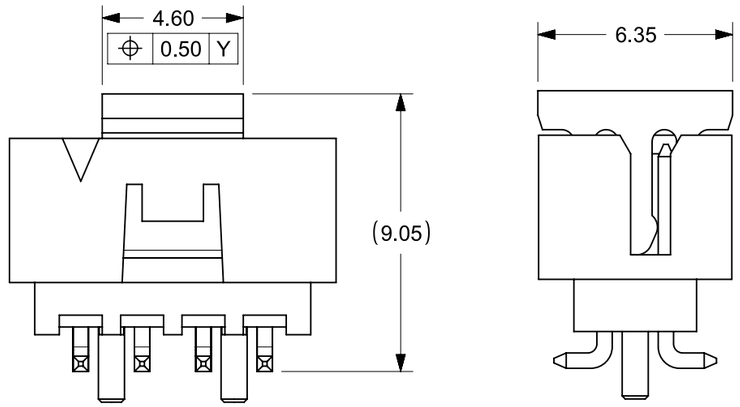

VIEW FOR HEADER WITH CAP

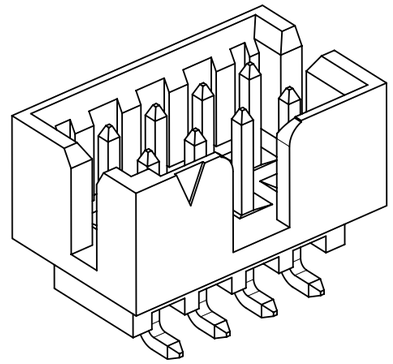

ISO VIEW OF HEADER WITH CENTER POLARIZATION AND DUAL SIDE SLOTS

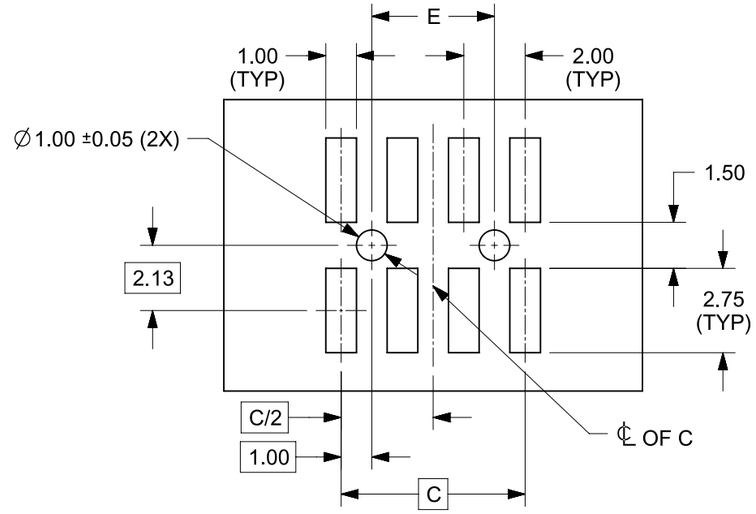

RECOMMENDED PCB LAYOUT

NOTES:
1. MATERIALS:
   HOUSING & CAP: 30% GF, NYLON, UL94V-0, COLOR: BLACK
   PIN: 0.50mm SQ. PHOSPHOR BRONZE
2. FINISHES: REFER TO PLATING OPTIONS
3. PRODUCT SPECIFICATION: PS-87831-027
4. PACKAGING SPECIFICATION: SEE PACKAGING SPECS TABLE ON SHEET 12
5. MATES WITH: A. MOLEX CRIMP RECEPTACLE HOUSING: 51110 SERIES
   AND CRIMP TERMINAL: 50394 SERIES
   B. MOLEX 2mm MILLIGRID DUAL ROW IDT: 87568 SERIES
   C. MOLEX 2mm MILLIGRID DUAL ROW RECEPTACLE:
   79107 (GOLD PLATED), 78787 (TIN PLATED)
6. COPLANARITY IS TO BE MEASURED BY RESTING THE SOLDERTAIL ON A GAUGE SURFACE
7. BEND DEPRESSION ON SMT TAIL IS ACCEPTABLE SO LONG AS IT DOES NOT AFFECT THE OVERALL COPLANARITY
8. TOP SURFACE OF CAP TO BE FLAT FOR THE PURPOSE OF PICK & PLACE BY VACUUM SUCTION NOZZLE

THIS DRAWING CONTAINS INFORMATION THAT IS PROPRIETARY TO MOLEX ELECTRONIC TECHNOLOGIES, LLC AND SHOULD NOT BE USED WITHOUT WRITTEN PERMISSION

FUNCTIONAL SYMBOLS: FA = 0, FC = 0, FP = 0
DIVISIONAL SYMBOLS

DIMENSION UNITS	SCALE
mm	NTS

GENERAL TOLERANCES (UNLESS SPECIFIED)

	MM	INCH
4 PLACES	±	±
3 PLACES	±	±
2 PLACES	± 0.200	±
1 PLACE	±	±
0 PLACES	±	±
ANGULAR TOL	± 3°	

DRAFT WHERE APPLICABLE MUST REMAIN WITHIN DIMENSIONS

CURRENT REV DESC: ADDING NEW PART NUMBER

STATUS: Production
DRWN: Meghraj Boodagatti 2026-06-04
CHK'D: Meghraj Boodagatti 2026-06-10
APPR: Saravanakumar Murugesan 2026-06-10
INITIAL REVISION:
DRWN: GMENARLY 2015-05-22
APPR: KHLIM 2015-09-22

THIRD ANGLE PROJECTION | DRAWING: A3-SIZE | SERIES: 87832

molex

MILLIGRID
2MM PITCH, SMT VERTICAL SHROUDED HEADER

PRODUCT CUSTOMER DRAWING

DOCUMENT NUMBER	DOC TYPE	DOC PART	REVISION
SD-87832-0001	PSD	001	A25

MATERIAL NUMBER	CUSTOMER	SHEET NUMBER
	GENERAL MARKET	6 OF 13

FORMAT: Met-logo-FC-tb-prod-A3
REVISION: B
DATE: 2023/10/23

8 TO 12 CIRCUITS

CKT SIZE	ASSY P/N WITHOUT CAP IN TUBE	ASSY P/N WITH CAP IN TUBE	ASSY P/N WITH CAP IN T&R	ASSY P/N WITHOUT CAP IN T&R	T&R OPTIONS (SEE SHEET 12)	PLATING OPTIONS	FRICTION LOCKS		DUAL SIDE SLOTS	CENTER POLARIZATION	PEGS	DIMENSION							
							DUAL	CENTER				A	B	C	D	E	F	G (COPLAN)	H
A24	87832-0860	87832-0862	87832-5362		1	1	N.A	N.A	YES	YES	YES	10.65	8.85	6.00	N.A	4.00	9.00	0.10	3.60±0.20
	87832-0820	87832-0822	87832-5322	87832-5330	1	2													
	87832-0821	87832-0823	87832-5323		1	3													
	87832-0870	87832-0872	87832-5372		1	4													
8	87832-0812	87832-0816	87832-0814		1	2	N.A	N.A	YES	YES	N.A							0.10	3.60±0.20
	87832-0824	87832-0826	87832-0828		1	2	N.A	YES	YES	N.A	N.A							0.10	3.60±0.15
	87832-0825	87832-0827	87832-0829		1	3													
	87832-0810	87832-0808	87832-0806		1	2	N.A	YES	YES	N.A	YES							0.10	3.60±0.20
	87832-0811	87832-0809	87832-0807		1	3													
	87832-0804	N.A	N.A		N.A	2	N.A	YES	YES	N.A	YES							0.10	3.60±0.20
10	87832-1060	87832-1062	87832-5462		1	1	N.A	N.A	YES	YES	YES	12.65	10.85	8.00	N.A	6.00	11.00	0.10	3.60±0.20
	87832-1020	87832-1022	87832-5422	87832-5430	1	2													
	87832-1021	87832-1023	87832-5423		1	3													
			87832-9423		2														
	87832-1070	87832-1072	87832-5472		1	4													
	87832-1012	87832-1016	87832-1014		1	2	N.A	N.A	YES	YES	N.A							0.10	3.60±0.20
	87832-1019	87832-1045	87832-1035		1	1													
	87832-1024	87832-1026	87832-1028		1	2	N.A	YES	YES	N.A	N.A							0.10	3.60±0.15
	N.A	N.A	87832-1055		1	1													
	87832-1025	87832-1027	87832-1029		1	3													
	87832-1010	87832-1008	87832-1006		1	2	N.A	YES	YES	N.A	YES							0.10	3.60±0.20
	87832-1011	87832-1009	87832-1007		1	3													
	87832-1004	N.A	N.A		N.A	2	N.A	YES	YES	N.A	YES							0.10	3.60±0.20
12	87832-1260	87832-1262	87832-5562		1	1	N.A	N.A	YES	YES	YES	14.65	12.85	10.00	N.A	8.00	13.00	0.10	3.60±0.20
	87832-1220	87832-1222	87832-5522		1	2													
	87832-1221	87832-1223	87832-5523		1	3													
			87832-9623		2														
	87832-1270	87832-1272	87832-5572		1	4													
	87832-1224	87832-1226	87832-1228		1	2	N.A	YES	YES	N.A	N.A							0.10	3.60±0.15
	87832-1225	87832-1227	87832-1229		1	3													
	87832-1210	87832-1208	87832-1206		1	2	N.A	YES	YES	N.A	YES							0.10	3.60±0.20
	87832-1211	87832-1209	87832-1207		1	3													
	87832-1204	N.A	N.A		N.A	2	N.A	YES	YES	N.A	YES							0.10	3.60±0.20
	87832-1212	N.A	N.A		N.A	2	N.A	N.A	YES	YES	N.A								

PLATING OPTIONS:

1 - 0.05-0.13µm/2-5µin GOLD IN CONTACT AREA AND
1.88µm/75µin MIN. MATTE TIN IN SOLDER TAIL AREA OVER
1.27µm/50µin MIN. NICKEL OVERALL.

2 - 0.38µm/15µin MIN. GOLD IN CONTACT AREA AND
1.88µm/75µin MIN. MATTE TIN IN SOLDER TAIL AREA OVER
1.27µm/50µin MIN. NICKEL OVERALL.

3 - 0.76µm/30µin MIN. GOLD IN CONTACT AREA AND
1.88µm/75µin MIN. MATTE TIN IN SOLDER TAIL AREA OVER
1.27µm/50µin MIN. NICKEL OVERALL.

4 - 2.50µm/100µin MIN. MATTE TIN OVER 1.25µm/50µin MIN. NICKEL OVERALL.

THIS DRAWING CONTAINS INFORMATION THAT IS PROPRIETARY TO MOLEX ELECTRONIC TECHNOLOGIES, LLC AND SHOULD NOT BE USED WITHOUT WRITTEN PERMISSION

FUNCTIONAL SYMBOLS: EA= 0, EC= 0, EP= 0
DIVISIONAL SYMBOLS

DIMENSION UNITS: mm
SCALE: NTS

GENERAL TOLERANCES (UNLESS SPECIFIED)

	MM	INCH
4 PLACES	±	±
3 PLACES	±	±
2 PLACES	± 0.200	±
1 PLACE	±	±
0 PLACES	±	±
ANGULAR TOL	± 3°	

DRAFT WHERE APPLICABLE MUST REMAIN WITHIN DIMENSIONS

CURRENT REV DESC: ADDING NEW PART NUMBER

STATUS: Production
DRWN: Meghraj Boodagatti 2026-06-04
CHK'D: Meghraj Boodagatti 2026-06-10
APPR: Saravanakumar Murugesan 2026-06-10

INITIAL REVISION:
DRWN: GMENARLY 2015-05-22
APPR: KHLIM 2015-09-22

THIRD ANGLE PROJECTION | DRAWING: A3-SIZE | SERIES: 87832

molex

MILLIGRID
2MM PITCH, SMT VERTICAL SHROUDED HEADER

PRODUCT CUSTOMER DRAWING

DOCUMENT NUMBER	DOC TYPE	DOC PART	REVISION
SD-87832-0001	PSD	001	A25

MATERIAL NUMBER	CUSTOMER	SHEET NUMBER
	GENERAL MARKET	7 OF 13

FORMAT: Mega_ECO-b-prod-A3
REVISION: B
DATE: 2023/10/03

14 TO 50 CIRCUITS

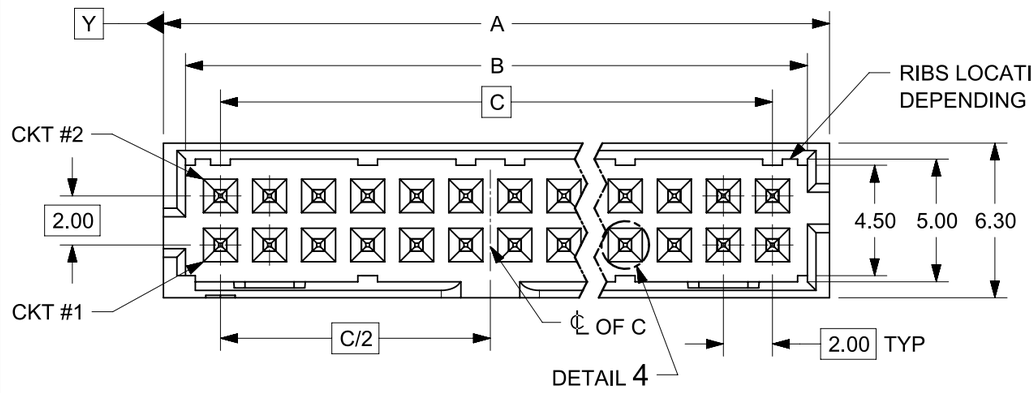

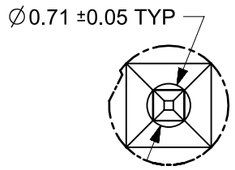

DETAIL 4

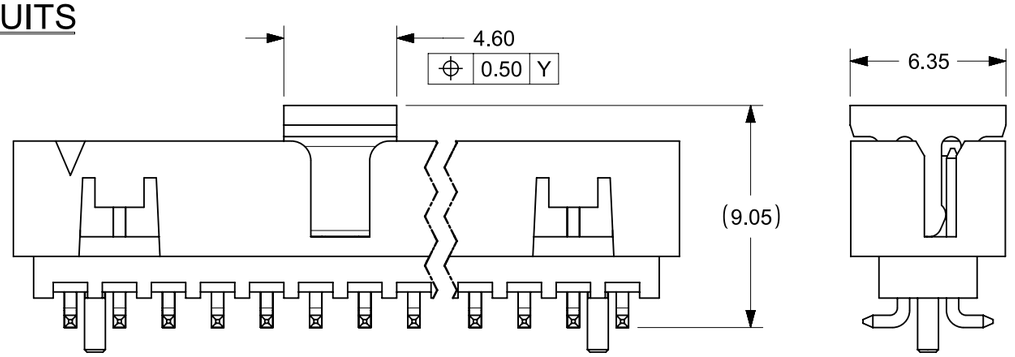

VIEW FOR HEADER WITH CAP

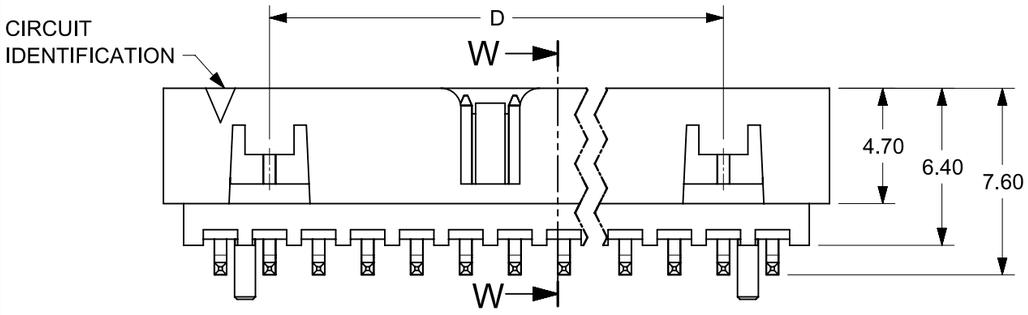

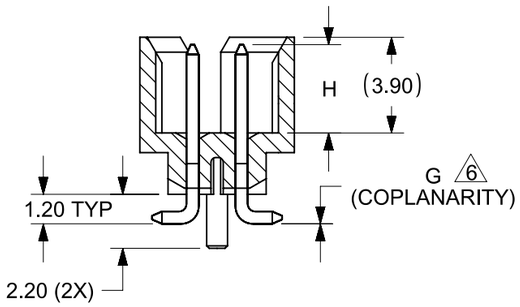

SECTION W-W

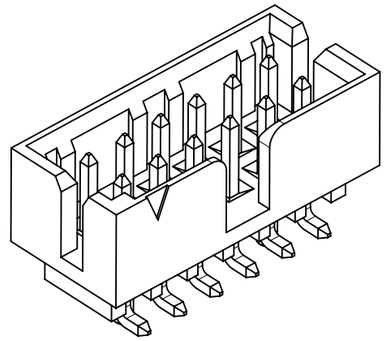

ISO VIEW OF HEADER WITH CENTER
POLARIZATION AND DUAL SIDE SLOTS

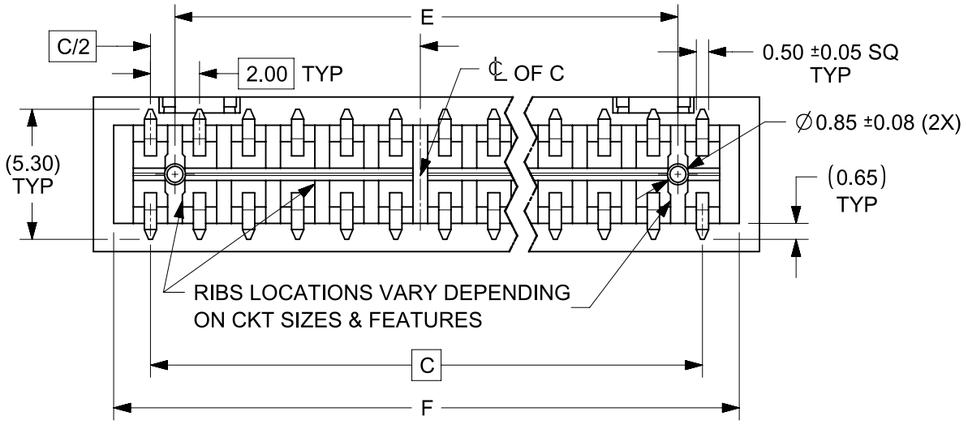

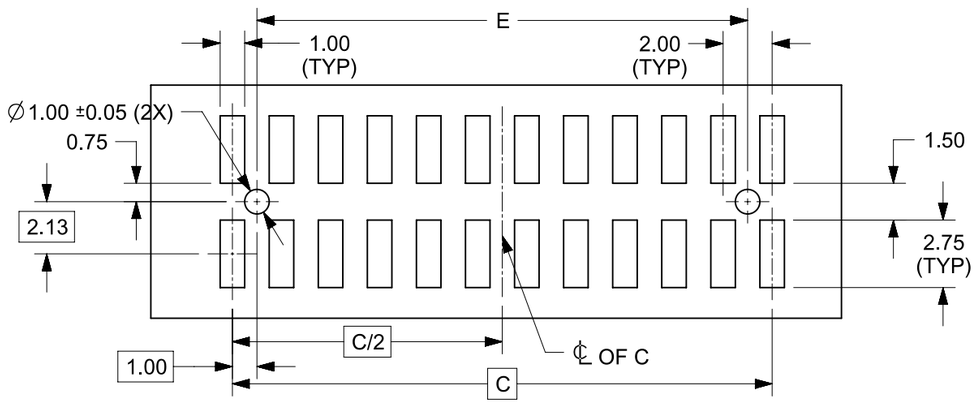

RECOMMENDED PCB LAYOUT

NOTES:
1. MATERIALS:
   HOUSING & CAP: 30% GF, NYLON, UL94V-0, COLOR: BLACK
   PIN: 0.50mm SQ. PHOSPHOR BRONZE
2. FINISHES: REFER TO PLATING OPTIONS
3. PRODUCT SPECIFICATION: PS-87831-027
4. PACKAGING SPECIFICATION: SEE PACKAGING SPECS TABLE ON SHEET 12
5. MATES WITH: A. MOLEX CRIMP RECEPTACLE HOUSING: 51110 SERIES
   AND CRIMP TERMINAL: 50394 SERIES
   B. MOLEX 2mm MILLIGRID DUAL ROW IDT: 87568 SERIES
   C. MOLEX 2mm MILLIGRID DUAL ROW RECEPTACLE:
   79107 (GOLD PLATED), 78787 (TIN PLATED)
6. COPLANARITY IS TO BE MEASURED BY RESTING THE SOLDERTAIL ON A GAUGE SURFACE
7. BEND DEPRESSION ON SMT TAIL IS ACCEPTABLE SO LONG AS IT DOES NOT AFFECT THE OVERALL COPLANARITY
8. TOP SURFACE OF CAP TO BE FLAT FOR THE PURPOSE OF PICK & PLACE BY VACUUM SUCTION NOZZLE

THIS DRAWING CONTAINS INFORMATION THAT IS PROPRIETARY TO MOLEX ELECTRONIC TECHNOLOGIES, LLC AND SHOULD NOT BE USED WITHOUT WRITTEN PERMISSION

FUNCTIONAL SYMBOLS: EA = 0, EC = 0, EP = 0
DIVISIONAL SYMBOLS

DIMENSION UNITS: mm
SCALE: NTS

GENERAL TOLERANCES (UNLESS SPECIFIED)

	MM	INCH
4 PLACES	±	±
3 PLACES	±	±
2 PLACES	± 0.200	±
1 PLACE	±	±
0 PLACES	±	±
ANGULAR TOL	± 3°	

DRAFT WHERE APPLICABLE MUST REMAIN WITHIN DIMENSIONS

CURRENT REV DESC: ADDING NEW PART NUMBER

STATUS: Production
DRWN: Meghraj Boodagatti 2026-06-04
CHK'D: Meghraj Boodagatti 2026-06-10
APPR: Saravanakumar Murugesan 2026-06-10

INITIAL REVISION:
DRWN: GMENARLY 2015-05-22
APPR: KHLIM 2015-09-22

THIRD ANGLE PROJECTION | DRAWING: A3-SIZE | SERIES: 87832

molex

MILLIGRID
2MM PITCH, SMT VERTICAL SHROUDED HEADER

PRODUCT CUSTOMER DRAWING

DOCUMENT NUMBER	DOC TYPE	DOC PART	REVISION
SD-87832-0001	PSD	001	A25

MATERIAL NUMBER	CUSTOMER	SHEET NUMBER
	GENERAL MARKET	8 OF 13

FORMAT: Megha_PCdb-prod-A3
REVISION: B
DATE: 2023/10/03

14 TO 24 CIRCUITS

CKT SIZE	ASSY P/N WITHOUT CAP IN TUBE	ASSY P/N WITH CAP IN TUBE	ASSY P/N WITH CAP IN T&R	ASSY P/N WITHOUT CAP IN T&R	T&R OPTIONS (SEE SHEET 12)	PLATING OPTIONS	FRICTION LOCKS		DUAL SIDE SLOTS	CENTER POLARIZATION	PEGS	DIMENSION								So (T&R)
							DUAL	CENTER				A	B	C	D	E	F	G (COPLANAR)	H	
14	87832-1460	87832-1462	87832-5662		1	1	YES	N.A	YES	YES	YES	16.65	14.85	12.00	8.00	10.00	15.00	0.15	3.60±0.20	
	87832-1420	87832-1422	87832-5622	87832-5630	1	2														
	87832-1421	87832-1423	87832-5623		1	3														
			87832-9523		2															
	87832-1470	87832-1472	87832-5672		1	4														
	87832-1412	87832-1416	87832-1414		1	2	YES	N.A	YES	YES	N.A							0.15	3.60±0.20	
16	87832-1660	87832-1662	87832-5762		1	1	YES	N.A	YES	YES	YES	18.65	16.85	14.00	10.00	12.00	17.00	0.15	3.60±0.20	
	87832-1620	87832-1622	87832-5722		1	2														
	87832-1621	87832-1623	87832-5723		1	3														
	87832-1670	87832-1672	87832-5772	87832-5730	1	4														
	87832-1612	87832-1616	87832-1614		1	2	YES	N.A	YES	YES	N.A							0.15	3.60±0.20	28.40
	87832-1619	87832-1645	87832-1635		1	1														
18	87832-1860	87832-1862	87832-5862		1	1	YES	N.A	YES	YES	YES	20.65	18.85	16.00	12.00	14.00	19.00	0.15	3.60±0.20	
	87832-1820	87832-1822	87832-5822	87832-5830	1	2														
	87832-1821	87832-1823	87832-5823		1	3														
	87832-1870	87832-1872	87832-5872		1	4														
	87832-1812	87832-1816	87832-1814		3	2	YES	N.A	YES	YES	N.A							0.15	3.60±0.20	
	87832-1813	87832-1817	87832-1815		3	3	YES	N.A	YES	YES	N.A							0.15	3.60±0.20	
20	87832-2060	87832-2062	87832-5962		1	1	YES	N.A	YES	YES	YES	22.65	20.85	18.00	14.00	16.00	21.00	0.15	3.60±0.20	
	87832-2020	87832-2022	87832-5922	87832-5930	1	2														
	87832-2021	87832-2023	87832-5923		1	3														
	87832-2070	87832-2072	87832-5972		1	4														
			87832-9672		2															
	87832-2012	87832-2016	87832-2014		1	2	YES	N.A	YES	YES	N.A							0.15	3.60±0.20	40.40
22	87832-2260	87832-2262	87832-6062		1	1	YES	N.A	YES	YES	YES	24.65	22.85	20.00	16.00	18.00	23.00	0.15	3.60±0.20	
	87832-2220	87832-2222	87832-6022	87832-6030	1	2														
	87832-2221	87832-2223	87832-6023	87832-6031	1	3														
	87832-2270	87832-2272	87832-6072		1	4														
24	87832-2460	87832-2462	87832-6162		1	1	YES	N.A	YES	YES	YES	26.65	24.85	22.00	18.00	20.00	25.00	0.15	3.60±0.20	
	87832-2420	87832-2422	87832-6122	87832-6130	1	2														
	87832-2421	87832-2423	87832-6123		1	3														
	87832-2470	87832-2472	87832-6172		1	4														
	87832-2412	87832-2416	87832-2414		1	2	YES	N.A	YES	YES	N.A							0.15	3.60±0.20	

PLATING OPTIONS:

1 - 0.05-0.13µm/2-5µin GOLD IN CONTACT AREA AND
1.88µm/75µin MIN. MATTE TIN IN SOLDER TAIL AREA OVER
1.27µm/50µin MIN. NICKEL OVERALL.

2 - 0.38µm/15µin MIN. GOLD IN CONTACT AREA AND
1.88µm/75µin MIN. MATTE TIN IN SOLDER TAIL AREA OVER
1.27µm/50µin MIN. NICKEL OVERALL.

3 - 0.76µm/30µin MIN. GOLD IN CONTACT AREA AND
1.88µm/75µin MIN. MATTE TIN IN SOLDER TAIL AREA OVER
1.27µm/50µin MIN. NICKEL OVERALL.

4 - 2.50µm/100µin MIN. MATTE TIN OVER 1.25µm/50µin MIN. NICKEL OVERALL.

THIS DRAWING CONTAINS INFORMATION THAT IS PROPRIETARY TO MOLEX ELECTRONIC TECHNOLOGIES, LLC AND SHOULD NOT BE USED WITHOUT WRITTEN PERMISSION

FUNCTIONAL SYMBOLS: EA = 0; EC = 0; ED = 0

DIVISIONAL SYMBOLS

DIMENSION UNITS: mm | SCALE: NTS

GENERAL TOLERANCES (UNLESS SPECIFIED)

	MM	INCH
4 PLACES	±	±
3 PLACES	±	±
2 PLACES	± 0.200	±
1 PLACE	±	±
0 PLACES	±	±
ANGULAR TOL	± 3°	

DRAFT WHERE APPLICABLE MUST REMAIN WITHIN DIMENSIONS

CURRENT REV DESC: ADDING NEW PART NUMBER

STATUS: Production

DRWN: Meghraj Boodagatti 2026-06-04

CHK'D: Meghraj Boodagatti 2026-06-10

APPR: Saravanakumar Murugesan 2026-06-10

INITIAL REVISION:

DRWN: GMENARLY 2015-05-22

APPR: KHLIM 2015-09-22

THIRD ANGLE PROJECTION | DRAWING: A3-SIZE | SERIES: 87832

molex

MILLIGRID
2MM PITCH, SMT VERTICAL SHROUDED HEADER

PRODUCT CUSTOMER DRAWING

DOCUMENT NUMBER	DOC TYPE	DOC PART	REVISION
SD-87832-0001	PSD	001	A25

MATERIAL NUMBER	CUSTOMER	SHEET NUMBER
	GENERAL MARKET	9 OF 13

26 TO 38 CIRCUITS

CKT SIZE	ASSY P/N WITHOUT CAP IN TUBE	ASSY P/N WITH CAP IN TUBE	ASSY P/N WITH CAP IN T&R	ASSY P/N WITHOUT CAP IN T&R	T&R OPTIONS (SEE SHEET 12)	PLATING OPTIONS	FRICTION LOCKS		DUAL SIDE SLOTS	CENTER POLARIZATION	PEGS	DIMENSION							
							DUAL	CENTER				A	B	C	D	E	F	G (COPLAN)	H
26	87832-2660	87832-2662	87832-6262		1	1	YES	N.A	YES	YES	YES	28.65	26.85	24.00	20.00	22.00	27.00	0.15	3.60±0.20
	87832-2620	87832-2622	87832-6222		1	2													
	87832-2621	87832-2623	87832-6223		1	3													
	87832-2670	87832-2672	87832-6272		1	4													
	87832-2612	87832-2616	N.A		N.A	2	YES	N.A	YES	YES	N.A							0.15	3.60±0.20
	87832-2619	87832-2645	87832-2635		1	1													
28	87832-2860	87832-2862	87832-6362		1	1	YES	N.A	YES	YES	YES	30.65	28.85	26.00	22.00	24.00	29.00	0.15	3.60±0.20
	87832-2820	87832-2822	87832-6322		1	2													
	87832-2821	87832-2823	87832-6323		1	3													
	87832-2870	87832-2872	87832-6372		1	4													
	N.A	87832-2816	N.A		1	2	YES	N.A	YES	YES	N.A								
	N.A	87832-2819	N.A		1	1													
30	87832-3060	87832-3062	87832-6462		1	1	YES	N.A	YES	YES	YES	32.65	30.85	28.00	24.00	26.00	31.00	0.15	3.60±0.20
	87832-3020	87832-3022	87832-6422		1	2													
	87832-3021	87832-3023	87832-6423		1	3													
	87832-3070	87832-3072	87832-6472		1	4													
	87832-3012	87832-3016	87832-3014		3	2	YES	N.A	YES	YES	N.A							0.15	3.60±0.20
32	87832-3260	87832-3262	87832-6562		1	1	YES	N.A	YES	YES	YES	34.65	32.85	30.00	26.00	28.00	33.00	0.15	3.60±0.20
	87832-3220	87832-3222	87832-6522		1	2													
	87832-3221	87832-3223	87832-6523		1	3													
	87832-3270	87832-3272	87832-6572		1	4													
34	87832-3460	87832-3462	87832-6662	87832-6630	1	1	YES	N.A	YES	YES	YES	36.65	34.85	32.00	28.00	30.00	35.00	0.15	3.60±0.20
	87832-3420	87832-3422	87832-6622		1	2													
	87832-3421	87832-3423	87832-6623		1	3													
	87832-3470	87832-3472	87832-6672		1	4													
	87832-3412	87832-3416	87832-3414		3	2	YES	N.A	YES	YES	N.A							0.15	3.60±0.20
	87832-3419	87832-3445	87832-3435		3	1													
36	87832-3660	87832-3662	N.A		N.A	1	YES	N.A	YES	YES	YES	38.65	36.85	34.00	30.00	32.00	37.00	0.15	3.60±0.20
	87832-3620	87832-3622	N.A		N.A	2													
	87832-3621	87832-3623	87832-3673		N.A	3													
	87832-3670	87832-3672	N.A		N.A	4													
38	87832-3860	87832-3862	N.A		N.A	1	YES	N.A	YES	YES	YES	40.65	38.85	36.00	32.00	34.00	39.00	0.15	3.60±0.20
	87832-3820	87832-3822	87832-6822		N.A	2													
	87832-3821	87832-3823	87832-3874		N.A	3													
	87832-3870	87832-3872	N.A		N.A	4													

PLATING OPTIONS:

1 - 0.05-0.13µm/2-5µin GOLD IN CONTACT AREA AND
1.88µm/75µin MIN. MATTE TIN IN SOLDER TAIL AREA OVER
1.27µm/50µin MIN. NICKEL OVERALL.

2 - 0.38µm/15µin MIN. GOLD IN CONTACT AREA AND
1.88µm/75µin MIN. MATTE TIN IN SOLDER TAIL AREA OVER
1.27µm/50µin MIN. NICKEL OVERALL.

3 - 0.76µm/30µin MIN. GOLD IN CONTACT AREA AND
1.88µm/75µin MIN. MATTE TIN IN SOLDER TAIL AREA OVER
1.27µm/50µin MIN. NICKEL OVERALL.

4 - 2.50µm/100µin MIN. MATTE TIN OVER 1.25µm/50µin MIN. NICKEL OVERALL.

THIS DRAWING CONTAINS INFORMATION THAT IS PROPRIETARY TO MOLEX ELECTRONIC TECHNOLOGIES, LLC AND SHOULD NOT BE USED WITHOUT WRITTEN PERMISSION

FUNCTIONAL SYMBOLS: FA = 0; FC = 0; FP = 0

DIVISIONAL SYMBOLS

DIMENSION UNITS: mm | SCALE: NTS

GENERAL TOLERANCES (UNLESS SPECIFIED)

	MM	INCH
4 PLACES	±	±
3 PLACES	±	±
2 PLACES	± 0.200	±
1 PLACE	±	±
0 PLACES	±	±
ANGULAR TOL	± 3°	

DRAFT WHERE APPLICABLE MUST REMAIN WITHIN DIMENSIONS

CURRENT REV DESC: ADDING NEW PART NUMBER

STATUS: Production
DRWN: Meghraj Boodagatti 2026-06-04
CHK'D: Meghraj Boodagatti 2026-06-10
APPR: Saravanakumar Murugesan 2026-06-10

INITIAL REVISION:
DRWN: GMENARLY 2015-05-22
APPR: KHLIM 2015-09-22

THIRD ANGLE PROJECTION | DRAWING: A3-SIZE | SERIES: 87832

molex

MILLIGRID
2MM PITCH, SMT VERTICAL SHROUDED HEADER

PRODUCT CUSTOMER DRAWING

DOCUMENT NUMBER	DOC TYPE	DOC PART	REVISION
SD-87832-0001	PSD	001	A25

MATERIAL NUMBER	CUSTOMER	SHEET NUMBER
	GENERAL MARKET	10 OF 13

FORMAT: Mega-MCC-b-prod-A3
REVISION: B
DATE: 2023/10/23

40 TO 50 CIRCUITS

CKT SIZE	ASSY P/N WITHOUT CAP IN TUBE	ASSY P/N WITH CAP IN TUBE	ASSY P/N WITH CAP IN T&R	ASSY P/N WITHOUT CAP IN T&R	VOID PIN LOCATION	T&R OPTIONS (SEE SHEET 12)	PLATING OPTIONS	FRICTION LOCKS		DUAL SIDE SLOTS	CENTER POLARIZATION	PEGS	DIMENSION							
								DUAL	CENTER				A	B	C	D	E	F	G (COPLAN)	H
40	87832-4060	87832-4062	87832-6962		-	1	1	YES	N.A	YES	YES	YES	42.65	40.85	38.00	34.00	36.00	41.00	0.15	3.60±0.20
	87832-4020	87832-4022	87832-6922		-	1	2													
	87832-4021	87832-4023	87832-6923		-	1	3													
	87832-4070	87832-4072	87832-6972		-	1	4													
	87832-4012	87832-4016	N.A		-	N.A	2	YES	N.A	YES	YES	N.A							0.15	3.60±0.20
		87832-6925			-	N.A	3													
42	87832-4260	87832-4262	N.A		-	N.A	1	YES	N.A	YES	YES	YES	44.65	42.85	40.00	36.00	38.00	43.00	0.15	3.60±0.20
	87832-4220	87832-4222	87832-4230		-	N.A	2													
	87832-4221	87832-4223	N.A		-	N.A	3													
	87832-4270	87832-4272	N.A		-	N.A	4													
44	87832-4460	87832-4462	87832-7162		-	1	1	YES	N.A	YES	YES	YES	46.65	44.85	42.00	38.00	40.00	45.00	0.15	3.60±0.20
	87832-4420	87832-4422	87832-7122		-	1	2													
	87832-4421	87832-4423	87832-7123		-	1	3													
	87832-4470	87832-4472	87832-7172		-	1	4													
	87832-4413	87832-4417	87832-4415		-	3	3	YES	N.A	YES	YES	N.A							0.15	3.60±0.20
46	87832-4660	87832-4662	87832-7262		-	1	1	YES	N.A	YES	YES	YES	48.65	46.85	44.00	40.00	42.00	47.00	0.15	3.60±0.20
	87832-4620	87832-4622	87832-7222	87832-7230	-	1	2													
	87832-4621	87832-4623	N.A		-	N.A	3													
	87832-4670	87832-4672	87832-7272		-	1	4													
48	87832-4860	87832-4862	N.A		-	N.A	1	YES	N.A	YES	YES	YES	50.65	48.85	46.00	42.00	44.00	49.00	0.15	3.60±0.20
	87832-4820	87832-4822	N.A		-	N.A	2													
	87832-4821	87832-4823	N.A		-	N.A	3													
	87832-4870	87832-4872	N.A		-	N.A	4													
50	87832-5060	87832-5062	87832-7462		-	1	1	YES	N.A	YES	YES	YES	52.65	50.85	48.00	44.00	46.00	51.00	0.15	3.60±0.20
	87832-5020	87832-5022	87832-7422		-	1	2													
	87832-5021	87832-5023	87832-7423		-	1	3													
	87832-5070	87832-5072	87832-7472		-	1	4													
		87832-5032			9,10,11,12,17,18,39,40	1	1													
		87832-5033			18,17,33,34	1	1													
	87832-5012	87832-5016	N.A		-	N.A	2	YES	N.A	YES	YES	N.A							0.15	3.60±0.20

PLATING OPTIONS:

1 - 0.05-0.13µm/2-5µin GOLD IN CONTACT AREA AND
1.88µm/75µin MIN. MATTE TIN IN SOLDER TAIL AREA OVER
1.27µm/50µin MIN. NICKEL OVERALL.

2 - 0.38µm/15µin MIN. GOLD IN CONTACT AREA AND
1.88µm/75µin MIN. MATTE TIN IN SOLDER TAIL AREA OVER
1.27µm/50µin MIN. NICKEL OVERALL.

3 - 0.76µm/30µin MIN. GOLD IN CONTACT AREA AND
1.88µm/75µin MIN. MATTE TIN IN SOLDER TAIL AREA OVER
1.27µm/50µin MIN. NICKEL OVERALL.

4 - 2.50µm/100µin MIN. MATTE TIN OVER 1.25µm/50µin MIN. NICKEL OVERALL.

THIS DRAWING CONTAINS INFORMATION THAT IS PROPRIETARY TO MOLEX ELECTRONIC TECHNOLOGIES, LLC AND SHOULD NOT BE USED WITHOUT WRITTEN PERMISSION

FUNCTIONAL SYMBOLS: FA = 0, FC = 0, FP = 0

DIVISIONAL SYMBOLS

DIMENSION UNITS: mm | SCALE: NTS

GENERAL TOLERANCES (UNLESS SPECIFIED)

	MM	INCH
4 PLACES	±	±
3 PLACES	±	±
2 PLACES	± 0.200	±
1 PLACE	±	±
0 PLACES	±	±
ANGULAR TOL	± 3°	

DRAFT WHERE APPLICABLE MUST REMAIN WITHIN DIMENSIONS

CURRENT REV DESC: ADDING NEW PART NUMBER

STATUS: Production
DRWN: Meghraj Boodagatti 2026-06-04
CHK'D: Meghraj Boodagatti 2026-06-10
APPR: Saravanakumar Murugesan 2026-06-10

INITIAL REVISION:
DRWN: GMENARLY 2015-05-22
APPR: KHLIM 2015-09-22

THIRD ANGLE PROJECTION | DRAWING: A3-SIZE | SERIES: 87832

molex

MILLIGRID
2MM PITCH, SMT VERTICAL SHROUDED HEADER

PRODUCT CUSTOMER DRAWING

DOCUMENT NUMBER	DOC TYPE	DOC PART	REVISION
SD-87832-0001	PSD	001	A25

MATERIAL NUMBER	CUSTOMER	SHEET NUMBER
	GENERAL MARKET	11 OF 13

FORMAT: Mx-ENGG-tb-prod-A3
REVISION: B
DATE: 2023/10/20

PACKAGING OPTIONS

OPTION 1

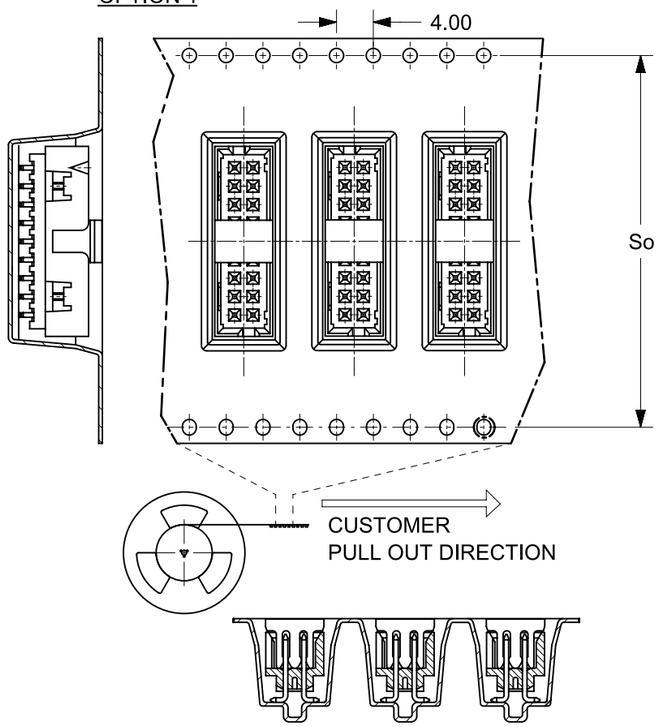

OPTION 2

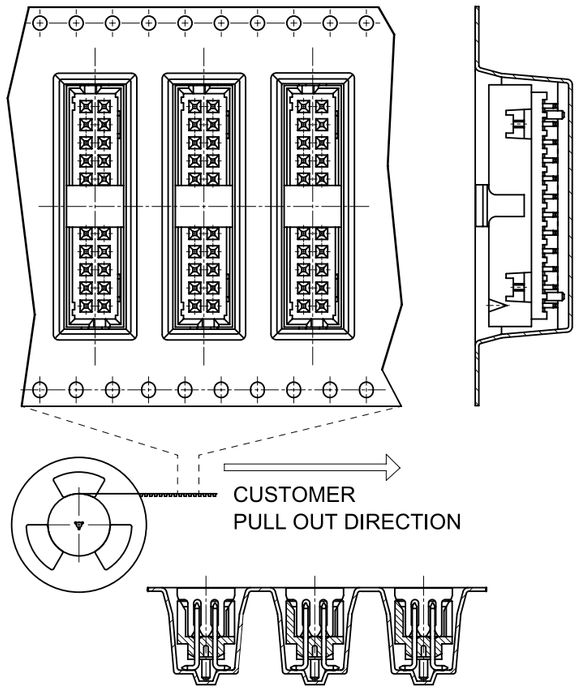

OPTION 3

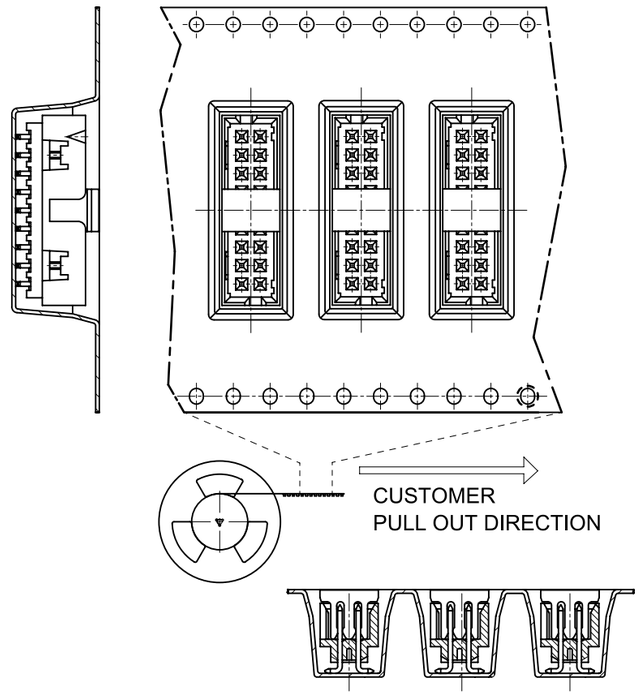

VIEW FOR 1 SIDE PILOT HOLE

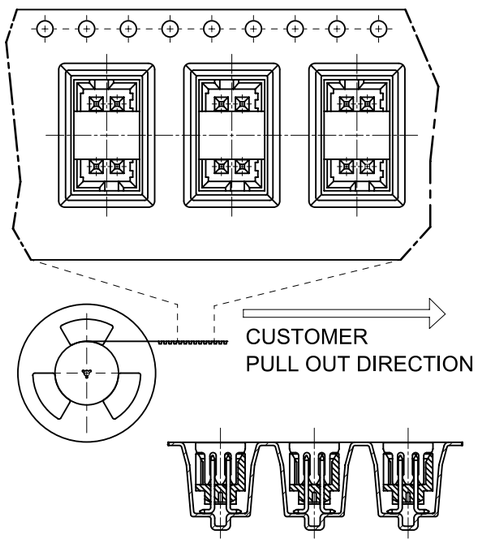

PACKAGING SPECIFICATION TABLE

TAPE AND REEL PACKAGING	PK-87832-300
TUBE STANDARD PACKAGING	PK-87831-001
TUBE NON-STANDARD PACKAGING FOR: 87832-0411 87832-0824 87832-1072 87832-1412	PK-87831-002

EMBOSSED TAPE & REEL POCKET DESCRIPTIONS

OPTIONS	CENTER POLARIZATION OPTIONS		PEG OPTIONS		PILOT HOLE OPTIONS	
	ON THE LEFT	ON THE RIGHT	WITH PEG	WITHOUT PEG	2 SIDES	1 SIDE
1	YES	N.A	YES	N.A	CKT 12-50	CKT 4-10
2	N.A	YES	YES	YES	CKT 12-50	CKT 4-10
3	YES	N.A	N.A	YES	CKT 12-50	CKT 4-10

THIS DRAWING CONTAINS INFORMATION THAT IS PROPRIETARY TO MOLEX ELECTRONIC TECHNOLOGIES, LLC AND SHOULD NOT BE USED WITHOUT WRITTEN PERMISSION

FUNCTIONAL SYMBOLS: FA = 0, FC = 0, FP = 0

DIVISIONAL SYMBOLS

DIMENSION UNITS: mm | SCALE: NTS

GENERAL TOLERANCES (UNLESS SPECIFIED)

	MM	INCH
4 PLACES	±	±
3 PLACES	±	±
2 PLACES	± 0.200	±
1 PLACE	±	±
0 PLACES	±	±
ANGULAR TOL	± 3°	

DRAFT WHERE APPLICABLE MUST REMAIN WITHIN DIMENSIONS

CURRENT REV DESC: ADDING NEW PART NUMBER

STATUS: Production
DRWN: Meghraj Boodagatti 2026-06-04
CHK'D: Meghraj Boodagatti 2026-06-10
APPR: Saravanakumar Murugesan 2026-06-10

INITIAL REVISION:
DRWN: GMENARLY 2015-05-22
APPR: KHLIM 2015-09-22

THIRD ANGLE PROJECTION | DRAWING: A3-SIZE | SERIES: 87832

molex

MILLIGRID
2MM PITCH, SMT VERTICAL SHROUDED HEADER

PRODUCT CUSTOMER DRAWING

DOCUMENT NUMBER	DOC TYPE	DOC PART	REVISION
SD-87832-0001	PSD	001	A25

MATERIAL NUMBER	CUSTOMER	SHEET NUMBER
	GENERAL MARKET	12 OF 13

FORMAT: Metlogic-PC-tb-prod-A3
REVISION: B
DATE: 2023/10/23

BOARD TO BOARD (BTB) DISTANCE

HEADER	MATES WITH (RECEPTACLE)	BTB DIST.	PICTORIAL VIEW
87832	79107	8.14	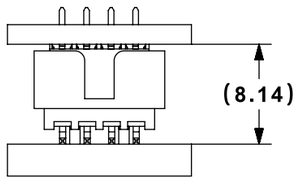
	78787	8.14	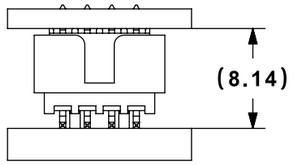
	79108	8.14	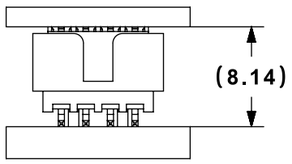
	79109	8.35	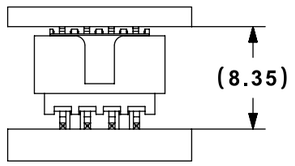
	78788	8.35	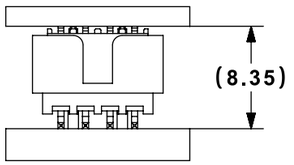

THIS DRAWING CONTAINS INFORMATION THAT IS PROPRIETARY TO MOLEX ELECTRONIC TECHNOLOGIES, LLC AND SHOULD NOT BE USED WITHOUT WRITTEN PERMISSION

FUNCTIONAL SYMBOLS
EA = 0
EC = 0
EP = 0
DIVISIONAL SYMBOLS

DIMENSION UNITS: mm
SCALE: NTS

GENERAL TOLERANCES (UNLESS SPECIFIED)

	MM	INCH
4 PLACES	±	±
3 PLACES	±	±
2 PLACES	± 0.200	±
1 PLACE	±	±
0 PLACES	±	±
ANGULAR TOL	± 3°	

DRAFT WHERE APPLICABLE MUST REMAIN WITHIN DIMENSIONS

CURRENT REV DESC: ADDING NEW PART NUMBER

STATUS: Production
DRWN: Meghraj Boodagatti 2026-06-04
CHK'D: Meghraj Boodagatti 2026-06-10
APPR: Saravanakumar Murugesan 2026-06-10
INITIAL REVISION:
DRWN: DRWN BY XXXX/XX/XX
APPR: APPR BY XXXX/XX/XX

THIRD ANGLE PROJECTION | DRAWING: A3-SIZE | SERIES: 87832

molex

MILLIGRID
2MM PITCH, SMT VERTICAL SHROUDED HEADER

PRODUCT CUSTOMER DRAWING

DOCUMENT NUMBER	DOC TYPE	DOC PART	REVISION
SD-87832-0001	PSD	001	A25

MATERIAL NUMBER	CUSTOMER	SHEET NUMBER
	GENERAL MARKET	13 OF 13

FORMAT: Mediga-TC-ib-prod-A3
REVISION: B
DATE: 2023/10/23