Features

- 650 V enhancement mode power transistor
- Top-side cooled configuration
- $R_{DS(on)}$ = 50 mΩ
- $I_{DS(max)}$ = 30 A
- Ultra-low FOM die
- Low inductance GaN*PX*® package
- Simple gate drive requirements (0 V to 6 V)
- Transient tolerant gate drive (-20 / +10V)
- Very high switching frequency (> 10 MHz)
- Fast and controllable fall and rise times
- Reverse current capability
- Zero reverse recovery loss
- Small 7.0 x 4.5 mm² PCB footprint
- Dual gate pads for optimal board layout
- RoHS 3 (6+4) compliant



Package Outline

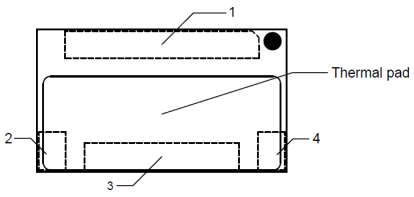

Circuit Symbol

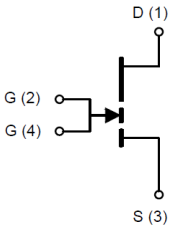

The thermal pad is internally connected to Source (S pin 3) and substrate

Applications

- AC-DC Converters
- DC-DC Converters
- Bridgeless Totem Pole PFC
- Inverters
- Energy Storage Systems
- On Board Battery Chargers
- Uninterruptable Power Supplies
- Solar Energy
- Industrial Motor Drives
- Appliances
- Laser Drivers
- Wireless Power Transfer

Description

The GS66508T is an enhancement mode GaN-on-silicon power transistor. The properties of GaN allow for high current, high voltage breakdown and high switching frequency. GaN Systems innovates with industry leading advancements such as patented **Island Technology®** and **GaN*PX*®** packaging. **Island Technology®** cell layout realizes high-current die and high yield. **GaN*PX*®** packaging enables low inductance & low thermal resistance in a small package. The GS66508T is a top-side cooled transistor that offers very low junction-to-case thermal resistance for demanding high power applications. These features combine to provide very high efficiency power switching.

© 2009-2020 GaN Systems Inc.

Submit datasheet feedback

Absolute Maximum Ratings (T_{case} = 25 °C except as noted)

Parameter	Symbol	Value	Unit
Operating Junction Temperature	T_J	-55 to +150	°C
Storage Temperature Range	T_S	-55 to +150	°C
Drain-to-Source Voltage	V_{DS}	650	V
Transient Drain-to-Source Voltage (Note 1)	$V_{DS(transient)}$	750	V
Gate-to-Source Voltage	V_{GS}	-10 to +7	V
Gate-to-Source Voltage - transient (Note 1)	$V_{GS(transient)}$	-20 to +10	V
Continuous Drain Current (T_{case}=25 °C)	I_{DS}	30	A
Continuous Drain Current (T_{case}=100 °C)	I_{DS}	25	A
Pulse Drain Current (Pulse width 50 µs, V_{GS} = 6 V) (Note 2)	$I_{DS\ Pulse}$	60	A

(1) For $\leq$ 1 µs

(2) Defined by product design and characterization. Value is not tested to full current in production.

Thermal Characteristics (Typical values unless otherwise noted)

Parameter	Symbol	Value	Units
Thermal Resistance (junction-to-case) – top side	$R_{\Theta JC}$	0.5	°C /W
Maximum Soldering Temperature (MSL3 rated)	T_{SOLD}	260	°C

Ordering Information

Ordering code	Package type	Packing method	Qty	Reel Diameter	Reel Width
GS66508T-TR	GaN*PX*® Top-Side Cooled	Tape-and-Reel	3000	13" (330mm)	16mm
GS66508T-MR	GaN*PX*® Top-Side Cooled	Mini-Reel	250	7" (180mm)	16mm

© 2009-2020 GaN Systems Inc.

Electrical Characteristics (Typical values at T_J = 25 °C, V_{GS} = 6 V unless otherwise noted)

Parameters	Sym.	Min.	Typ.	Max.	Units	Conditions
Drain-to-Source Blocking Voltage	$V_{BL(DSS)}$	650			V	V_{GS} = 0 V, I_{DSS} = 50 µA
Drain-to-Source On Resistance	$R_{DS(on)}$		50	63	mΩ	V_{GS} = 6 V, T_J = 25 °C I_D = 9 A
Drain-to-Source On Resistance	$R_{DS(on)}$		129		mΩ	V_{GS} = 6 V, T_J = 150 °C I_D = 9 A
Gate-to-Source Threshold	$V_{GS(th)}$	1.1	1.7	2.6	V	V_{DS} = V_{GS}, I_D = 7 mA
Gate-to-Source Current	I_{GS}		160		µA	V_{GS} = 6 V, V_{DS} = 0 V
Reverse Gate Leakage Current	I_{RGL}		10		nA	V_{GS} = - 7.5 V, V_{DS} = 0 V
Gate Plateau Voltage	V_{plat}		3		V	V_{DS} = 400 V, I_D = 30 A
Drain-to-Source Leakage Current	I_{DSS}		2	50	µA	V_{DS} = 650 V, V_{GS} = 0 V T_J = 25 °C
Drain-to-Source Leakage Current	I_{DSS}		400		µA	V_{DS} = 650 V, V_{GS} = 0 V T_J = 150 °C
Internal Gate Resistance	R_G		1.1		Ω	f = 5 MHz, open drain
Input Capacitance	C_{ISS}		242		pF	V_{DS} = 400 V V_{GS} = 0 V f = 100 kHz
Output Capacitance	C_{OSS}		65		pF	
Reverse Transfer Capacitance	C_{RSS}		1.5		pF	
Effective Output Capacitance Energy Related (Note 3)	$C_{O(ER)}$		100		pF	V_{GS} = 0 V V_{DS} = 0 to 400 V
Effective Output Capacitance Time Related (Note 4)	$C_{O(TR)}$		160		pF	
Total Gate Charge	Q_G		6.1		nC	V_{GS} = 0 to 6 V V_{DS} = 400 V
Gate-to-Source Charge	Q_{GS}		1.7		nC	
Gate-to-Drain Charge	Q_{GD}		2.2		nC	
Output Charge	Q_{OSS}		64		nC	V_{GS} = 0 V, V_{DS} = 400 V
Reverse Recovery Charge	Q_{RR}		0		nC	

(3) $C_{O(ER)}$ is the fixed capacitance that would give the same stored energy as C_{OSS} while V_{DS} is rising from 0 V to the stated V_{DS}

(4) $C_{O(TR)}$ is the fixed capacitance that would give the same charging time as C_{OSS} while V_{DS} is rising from 0 V to the stated V_{DS}

© 2009-2020 GaN Systems Inc.

Electrical Characteristics continued (Typical values at T_J = 25 °C, V_{GS} = 6 V unless otherwise noted)

Parameters	Sym.	Min.	Typ.	Max.	Units	Conditions
Turn-On Delay	$t_{D(on)}$		4.1		ns	V_{DD} = 400 V, V_{GS} =0-6 V I_D = 16 A, $R_{G(ext)}$ = 5 Ω T_J = 25 °C (Note 5)
Rise Time	t_R		3.7		ns	
Turn-Off Delay	$t_{D(off)}$		8		ns	
Fall Time	t_F		5.2		ns	
Turn-On Delay	$t_{D(on)}$		4.3		ns	V_{DD} = 400 V, V_{GS} =0-6 V I_D = 16 A, $R_{G(ext)}$ = 5 Ω T_J=125 °C (Note 5)
Rise Time	t_R		4.9		ns	
Turn-Off Delay	$t_{D(off)}$		8.2		ns	
Fall Time	t_F		3.4		ns	
Output Capacitance Stored Energy	E_{OSS}		8		µJ	V_{DS} = 400 V V_{GS} = 0 V, f = 100 kHz
Switching Energy during turn-on	E_{on}		47.5		µJ	V_{DS} = 400 V, I_D = 15 A V_{GS} = 0-6 V, $R_{G(on)}$ = 10 Ω $R_{G(off)}$ = 1 Ω, L = 40 µH L_P = 2 nH (Notes 6, 7)
Switching Energy during turn-off	E_{off}		8		µJ	

(5) See Figures 16 and 17 for timing test circuit diagram and definition waveforms

(6) L_P = parasitic inductance

(7) See Figure 18 for switching loss test circuit

© 2009-2020 GaN Systems Inc.

Electrical Performance Graphs

I_{DS} vs. V_{DS} Characteristic

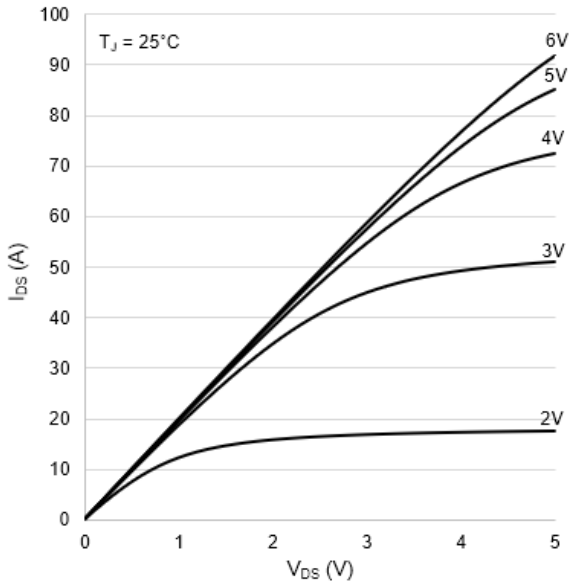

Figure 1: Typical I_{DS} vs. V_{DS} @ T_J = 25 °C

I_{DS} vs. V_{DS} Characteristic

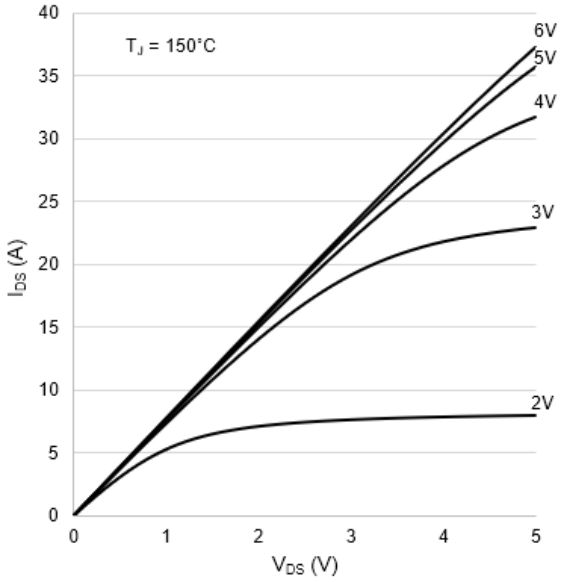

Figure 2: Typical I_{DS} vs. V_{DS} @ T_J = 150 °C

$R_{DS(on)}$ vs. I_{DS} Characteristic

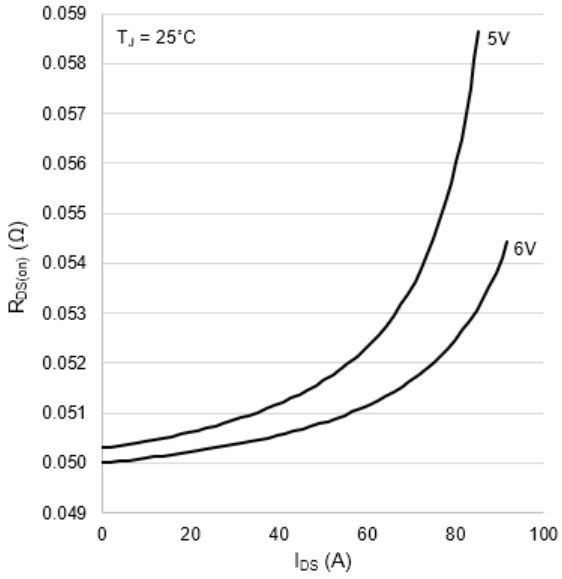

Figure 3: $R_{DS(on)}$ vs. I_{DS} at T_J = 25 °C

$R_{DS(on)}$ vs. I_{DS} Characteristic

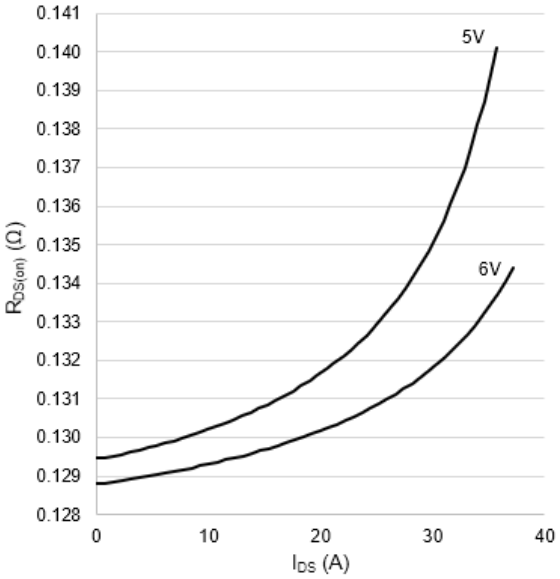

Figure 4: $R_{DS(on)}$ vs. I_{DS} at T_J = 150°C

© 2009-2020 GaN Systems Inc.

Electrical Performance Graphs

I_{DS} vs. V_{DS}, T_J dependence

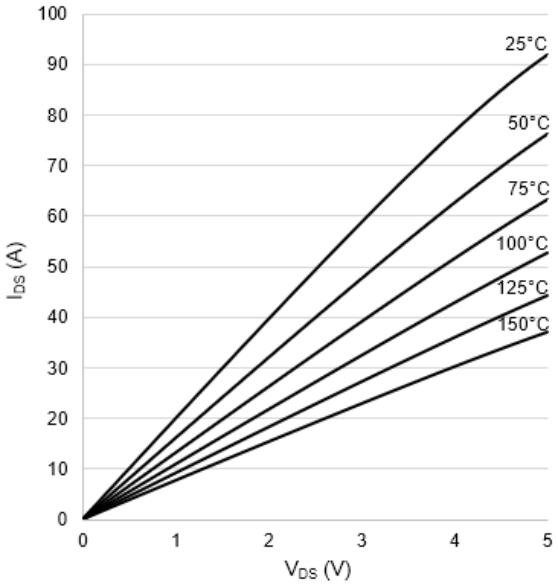

Figure 5: Typical I_{DS} vs. V_{DS} @ V_{GS} = 6 V

Gate Charge, Q_G Characteristic

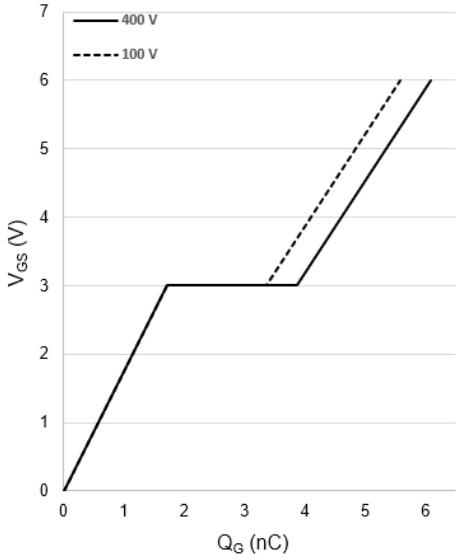

Figure 6: Typical V_{GS} vs. Q_G @ V_{DS} = 100, 400 V

Capacitance Characteristics

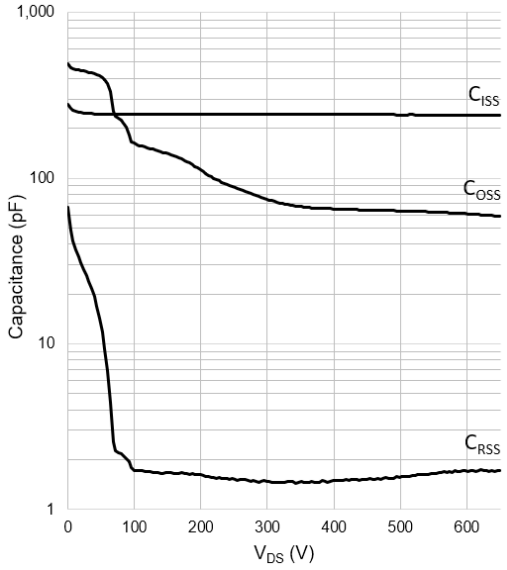

Figure 7: Typical C_{ISS}, C_{OSS}, C_{RSS} vs. V_{DS}

Stored Energy Characteristic

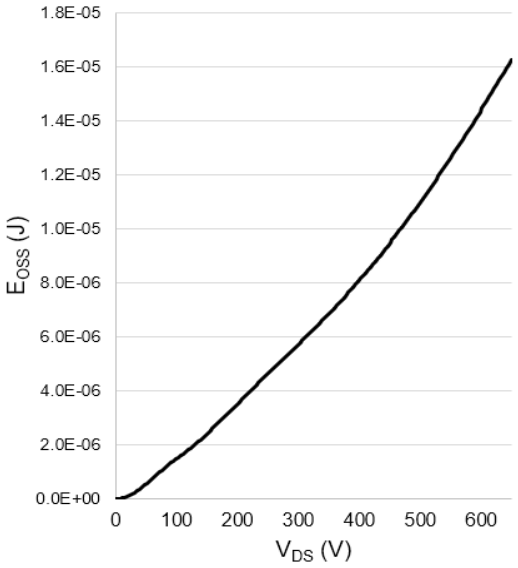

Figure 8: Typical C_{OSS} Stored Energy

© 2009-2020 GaN Systems Inc.

Electrical Performance Graphs

Reverse Conduction Characteristics

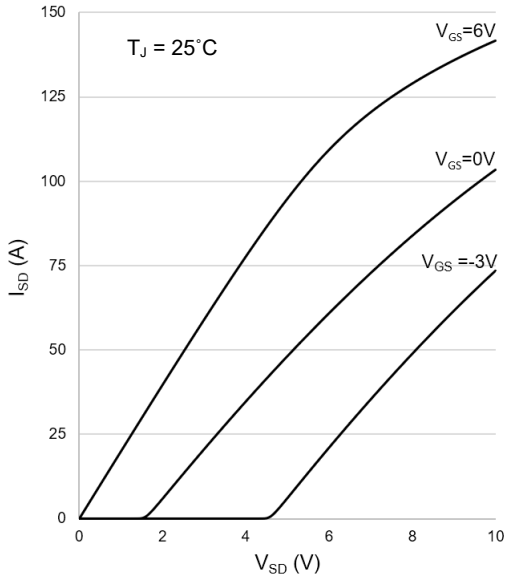

Figure 9: Typical I_{SD} vs. V_{SD} (T_J= 25 °C)

Reverse Conduction Characteristics

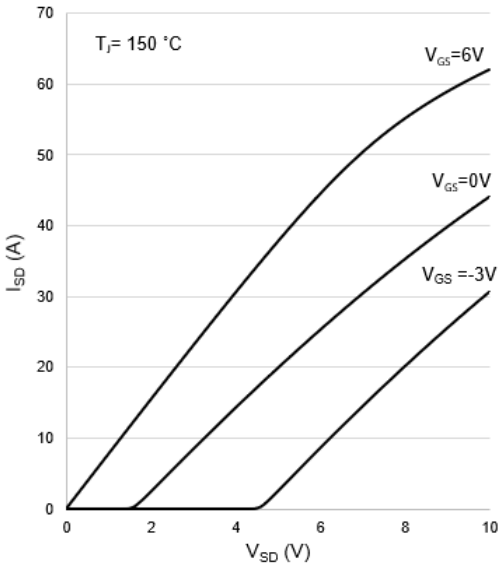

Figure 10: Typical I_{SD} vs. V_{SD} (T_J= 150 °C)

I_{DS} vs. V_{GS} Characteristic

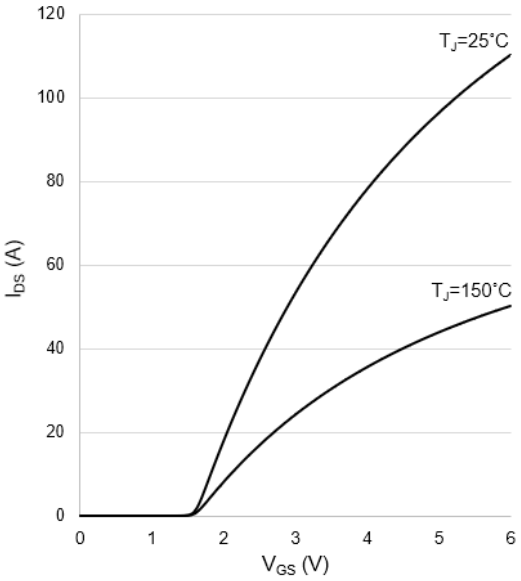

Figure 11: Typical I_{DS} vs. V_{GS}

$R_{DS(on)}$ Temperature Dependence

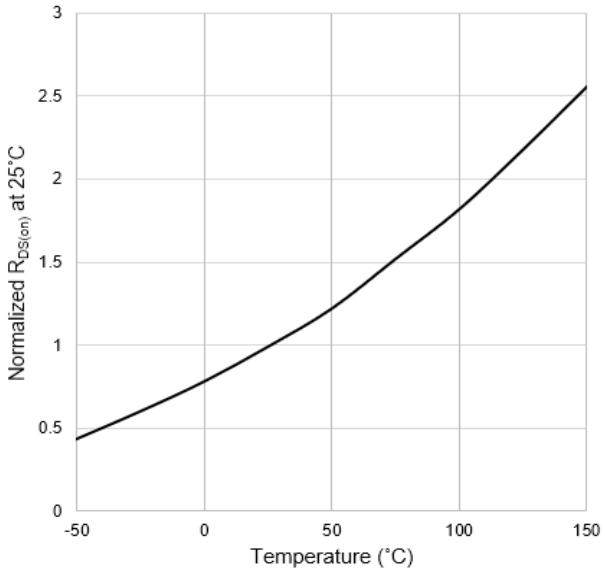

Figure 12: Normalized $R_{DS(on)}$ as a function of T_J

© 2009-2020 GaN Systems Inc.

Thermal Performance Graphs

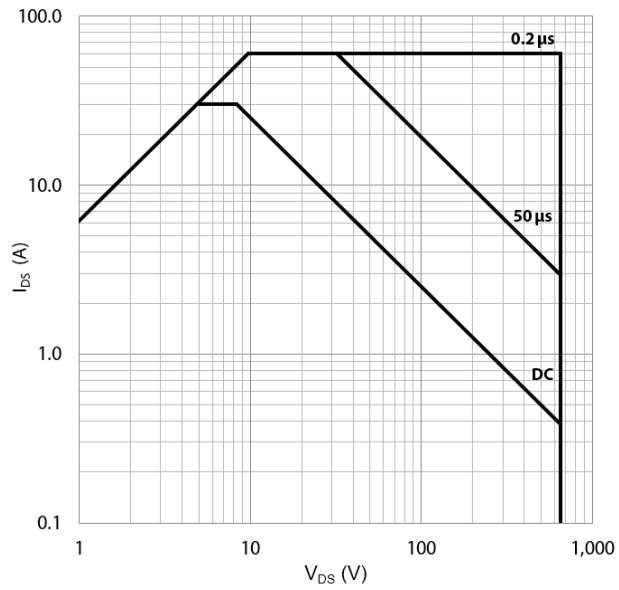

Figure 13: Safe Operating Area @ T_{case} = 25 °C

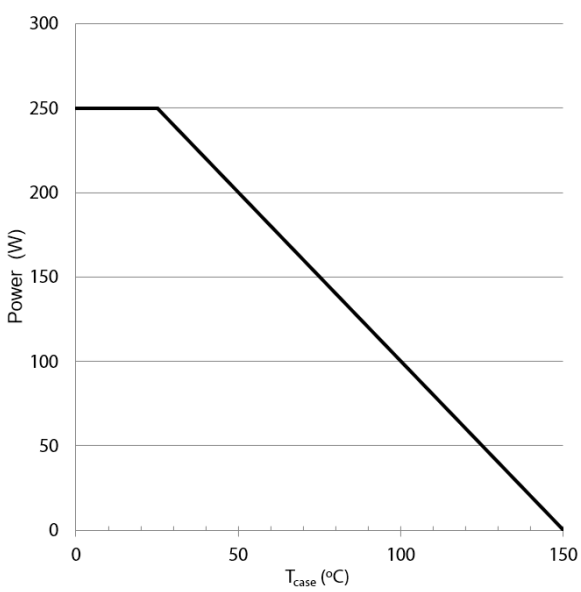

Figure 14: Derating vs. Case Temperature

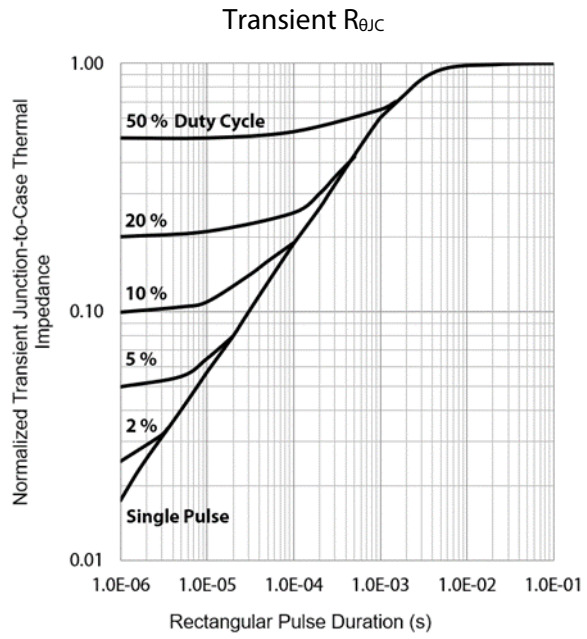

Figure 15: Transient Thermal Impedance

(1.00 = Nominal DC thermal impedance)

© 2009-2020 GaN Systems Inc.

Test Circuits

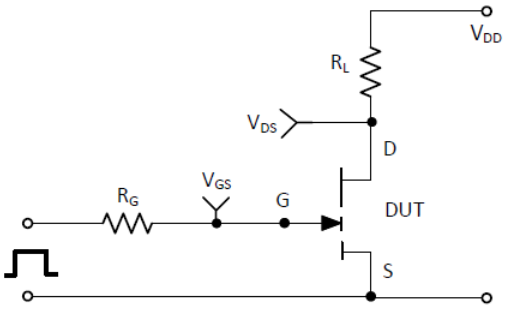

Figure 16: switching time test circuit

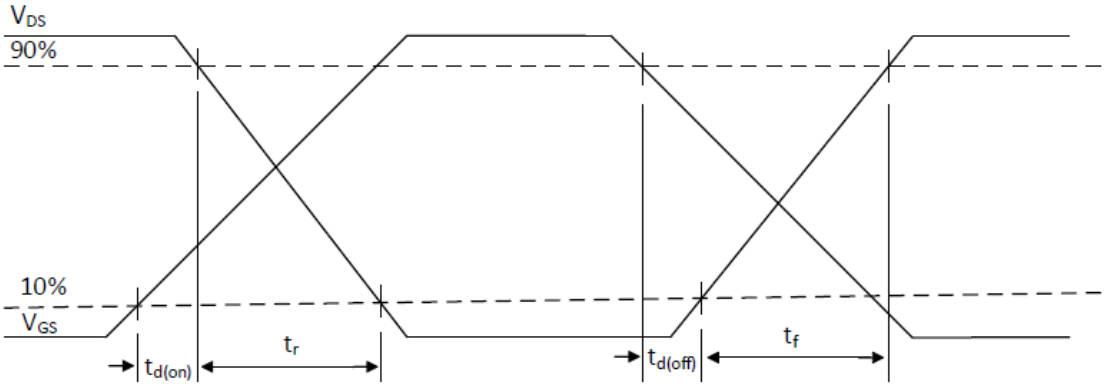

Figure 17: switching time waveforms

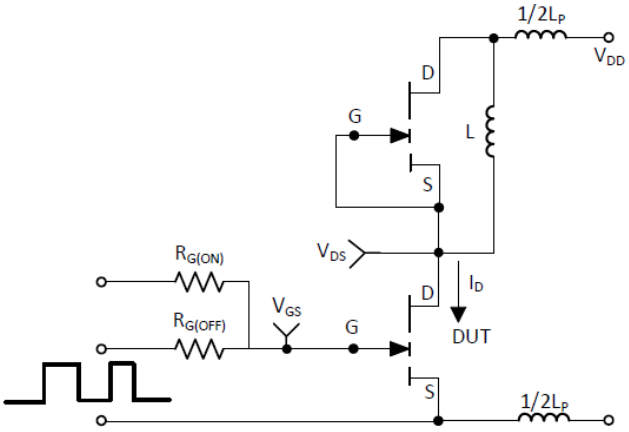

Figure 18: Switching Loss Test Circuit

© 2009-2020 GaN Systems Inc.

Application Information

Gate Drive

The recommended gate drive voltage range, V_{GS}, is 0 V to + 6 V for optimal $R_{DS(on)}$ performance. Also, the repetitive gate to source voltage, maximum rating, $V_{GS(AC)}$, is +7 V to -10 V. The gate can survive non-repetitive transients up to +10 V and – 20 V for pulses up to 1 µs. These specifications allow designers to easily use 6.0 V or 6.5 V gate drive settings. At 6 V gate drive voltage, the enhancement mode high electron mobility transistor (E-HEMT) is fully enhanced and reaches its optimal efficiency point. A 5 V gate drive can be used but may result in lower operating efficiency. Inherently, GaN Systems E-HEMTs do not require negative gate bias to turn off. Negative gate bias, typically V_{GS} = -3 V, ensures safe operation against the voltage spike on the gate, however it may increase reverse conduction losses if not driven properly. For more details, please refer to the gate driver application note "GN001 How to Drive GaN Enhancement Mode Power Switching Transistors" at www.gansystems.com

Similar to a silicon MOSFET, the external gate resistor can be used to control the switching speed and slew rate. Adjusting the resistor to achieve the desired slew rate may be needed. Lower turn-off gate resistance, $R_{G(OFF)}$ is recommended for better immunity to cross conduction. Please see the gate driver application note (GN001) for more details.

A standard MOSFET driver can be used as long as it supports 6V for gate drive and the UVLO is suitable for 6V operation. Gate drivers with low impedance and high peak current are recommended for fast switching speed. GaN Systems E-HEMTs have significantly lower Q_G when compared to equally sized $R_{DS(on)}$ MOSFETs, so high speed can be reached with smaller and lower cost gate drivers.

Some non-isolated half bridge MOSFET drivers are not compatible with 6 V gate drive due to their high under-voltage lockout threshold. Also, a simple bootstrap method for high side gate drive may not be able to provide tight tolerance on the gate voltage. Therefore, special care should be taken when you select and use the half bridge drivers. Please see the gate driver application note (GN001) for more details.

Parallel Operation

Design wide tracks or polygons on the PCB to distribute the gate drive signals to multiple devices. Keep the drive loop length to each device as short and equal length as possible.

The dual gate drive pins are used to achieve balanced gate drive, especially useful in parallel GaN transistors operation. Both gate drive pins are internally connected to the gate, so only one needs to be connected. Connecting both may lead to timing improvements at very high frequencies. The two gates on the top-side cooled device are not designed to be used as a signal pass-through. When multiple devices are used in parallel, it is not recommended to use one gate connection to the other (on the same transistor) as a signal path for the gate drive to the next device. Design wide tracks or polygons on the PCB to distribute the gate drive signals to multiple devices. Keep the drive loop length to each device as short and equal length as possible.

GaN enhancement mode HEMTs have a positive temperature coefficient on-state resistance which helps to balance the current. However, special care should be taken in the driver circuit and PCB layout since the device

© 2009-2020 GaN Systems Inc.

switches at very fast speed. It is recommended to have a symmetric PCB layout and equal gate drive loop length (star connection if possible) on all parallel devices to ensure balanced dynamic current sharing. Adding a small gate resistor (1-2 Ω) on each gate is strongly recommended to minimize the gate parasitic oscillation.

Source Sensing

Although the device does not have a dedicated source sense pin, the GaN*PX*® packaging utilizes no wire bonds so the source connection is already very low inductance. By simply using a dedicated "source sense" connection on the PCB to the Source pad in a kelvin configuration, the function can easily be implemented. It is recommended to implement a "source sense" connection to improve drive performance.

Thermal

The substrate is internally connected to the thermal pad on the top-side and to the source pin on the bottom side of the package. The transistor is designed to be cooled using a heat sink on the top of the device.
The Drain and Source pads are not as thermally conductive as the thermal pad. However, adding more copper under these two pads will improve thermal performance by reducing the packaging temperature.

Thermal Modeling

RC thermal models are available to support detailed thermal simulation using SPICE. The thermal models are created using the Cauer model, an RC network model that reflects the real physical property and packaging structure of our devices. This thermal model can be extended to the system level by adding extra R_θ and C_θ to simulate the Thermal Interface Material (TIM) or Heatsink.

RC thermal model:

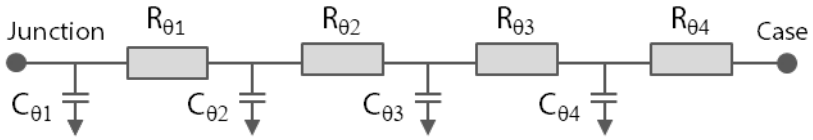

RC breakdown of $R_{\Theta JC}$

R_θ (°C/W)	C_θ (W·s/°C)
$R_{\theta 1}$ = 0.015	$C_{\theta 1}$ = 8.0E-05
$R_{\theta 2}$ = 0.23	$C_{\theta 2}$ = 7.4E-04
$R_{\theta 3}$ = 0.24	$C_{\theta 3}$ = 6.5E-03
$R_{\theta 4}$ = 0.015	$C_{\theta 4}$ = 2.0E-03

For more detail, please refer to Application Note GN007 "Modeling Thermal Behavior of GaN Systems' GaN*PX*® Using RC Thermal SPICE Models" available at www.gansystems.com

© 2009-2020 GaN Systems Inc.

Reverse Conduction

GaN Systems enhancement mode HEMTs do not have an intrinsic body diode and there is zero reverse recovery charge. The devices are naturally capable of reverse conduction and exhibit different characteristics depending on the gate voltage. Anti-parallel diodes are not required for GaN Systems transistors as is the case for IGBTs to achieve reverse conduction performance.

On-state condition (V_{GS} = +6 V): The reverse conduction characteristics of a GaN Systems enhancement mode HEMT in the on-state is similar to that of a silicon MOSFET, with the I-V curve symmetrical about the origin and it exhibits a channel resistance, $R_{DS(on)}$, similar to forward conduction operation.

Off-state condition ($V_{GS} \leq 0$ V): The reverse characteristics in the off-sate are different from silicon MOSFET as the GaN device has no body diode. In the reverse direction, the device starts to conduct when the gate voltage, with respect to the drain, (V_{GD}) exceeds the gate threshold voltage. At this point the device exhibits a channel resistance. This condition can be modeled as a "body diode" with slightly higher V_F and no reverse recovery charge.

If negative gate voltage is used in the off-state, the source-drain voltage must be higher than $V_{GS(th)}+V_{GS(off)}$ in order to turn the device on. Therefore, a negative gate voltage will add to the reverse voltage drop "V_F" and hence increase the reverse conduction loss.

Blocking Voltage

The blocking voltage rating, $V_{BL(DSS)}$, is defined by the drain leakage current. The hard (unrecoverable) breakdown voltage is approximately 30% higher than the rated $V_{BL(DSS)}$. As a general practice, the maximum drain voltage should be de-rated in a similar manner as IGBTs or silicon MOSFETs. All GaN E-HEMTs do not avalanche and thus do not have an avalanche breakdown rating. The maximum drain-to-source rating is 650 V and does not change with negative gate voltage. GaN Systems tests devices in production with a 750V Drain-to-source voltage pulse to insure blocking voltage margin.

Packaging and Soldering

The package material is high temperature epoxy-based PCB material which is similar to FR4 but has a higher temperature rating, thus allowing the device to be specified to 150 °C. The device can handle at least 3 reflow cycles.

It is recommended to use the reflow profile in IPC/JEDEC J-STD-020 REV D.1 (March 2008)

The basic temperature profiles for Pb-free (Sn-Ag-Cu) assembly are:

- Preheat/Soak: 60-120 seconds. T_{min} = 150 °C, T_{max} = 200 °C.
- Reflow: Ramp up rate 3°C/sec, max. Peak temperature is 260 °C and time within 5 °C of peak temperature is 30 seconds.
- Cool down: Ramp down rate 6 °C/sec max.

© 2009-2020 GaN Systems Inc.

Using "No-Clean" soldering paste and operating at high temperatures may cause a reactivation of the "No-Clean" flux residues. In extreme conditions, unwanted conduction paths may be created. Therefore, when the product operates at greater than 100 °C it is recommended to also clean the "No-Clean" paste residues.
Avoid placing printed circuit board traces with high differential voltage to the source or drain directly underneath the top-cooled package on the PCB to avoid potential electro-migration and solder mask isolation issues during high temperature or/and voltage operation.

Routing Guidelines

The following layout recommendations are highlighted. Additional detail is provided in Application Note GN001 at [www.gansystems.com.](http://www.gansystems.com)

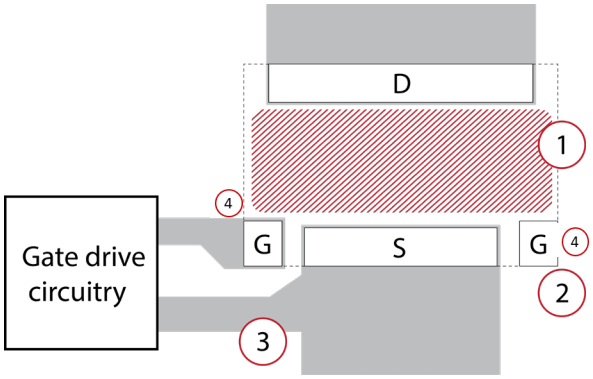

1. Keep out area: Avoid placing traces or vias on the top layer of the PCB, directly underneath the package. This is to prevent potential electro-migration and solder mask isolation issues during high temperature or/and voltage operation.
2. Symmetrical dual gates are provided for flexible layout and easy paralleling. Either gate drive can be used. If the second gate is note used, it should be left floating.
3. A separate Source Sense pin is not provided on our top-side products because of the ultra-low inductance of our GaN*PX*® packaging. The Source Sense pin functionality can be implemented simply by routing a Kelvin connection at the side of the Source pad. This can be done at either side of the source pad for layout optimization.
4. Do not route vias within the Gate pad as it may affect long term solder joint reliability. For other pads, it is recommended to implement filled vias for better solder joint reliability.

© 2009-2020 GaN Systems Inc.

Recommended PCB Footprint

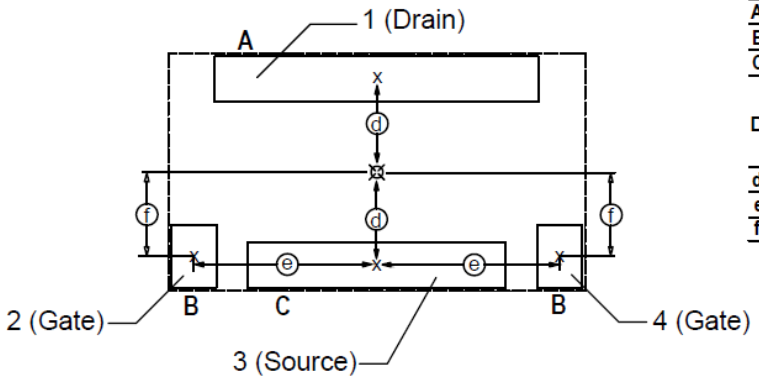

Pad sizes

	mm		Inches	
	X (width)	Y (height)	X (width)	Y (height)
A	5.71	0.74	0.225	0.029
B	0.74	0.89	0.029	0.035
C	4.14	0.74	0.163	0.029

Dimensions

	mm	Inches
d	1.80	0.071
e	3.03	0.119
f	1.72	0.068

PCB pad openings

Package outline

© 2009-2020 GaN Systems Inc.

Package Dimensions

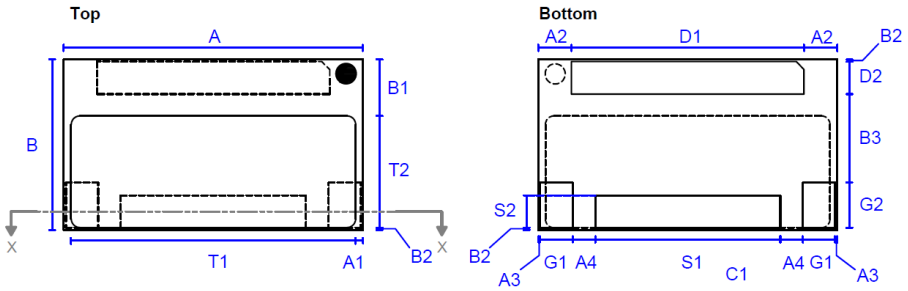

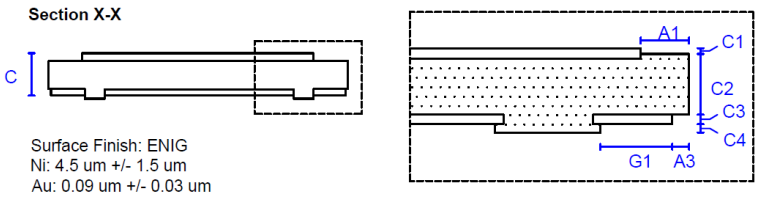

Surface Finish: ENIG
Ni: 4.5 um +/- 1.5 um
Au: 0.09 um +/- 0.03 um

	mm	Inches*	
A	6.96	0.274	+/- 0.100 mm (0.004")
A1	0.22	0.009	+/- 0.050 mm (0.002")
A2	0.62	0.024	+/- 0.050 mm (0.002")
A3	0.08	0.003	+/- 0.050 mm (0.002")
A4	0.60	0.024	
B	4.48	0.176	+/- 0.100 mm (0.004")
B1	1.32	0.052	+/- 0.050 mm (0.002")
B2	0.08	0.003	+/- 0.050 mm (0.002")
B3	2.70	0.106	
C	0.54	0.021	+/- 0.081 mm (0.003")
C1	0.04	0.002	
C2	0.38	0.015	
C3	0.07	0.003	
C4	0.05	0.002	
D1	5.71	0.225	
D2	0.74	0.029	
G1	0.74	0.029	
G2	0.89	0.035	
S1	4.14	0.163	
S2	0.74	0.029	
T1	6.52	0.257	
T2	3.09	0.122	

*Inch measurements are approximate values

Part Marking

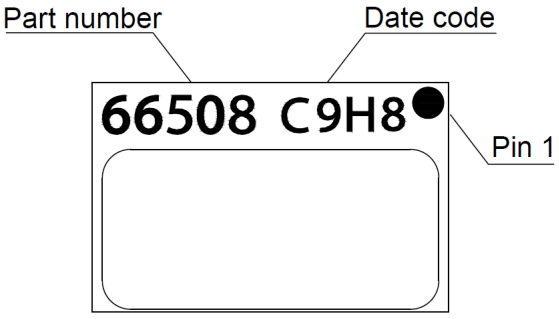

© 2009-2020 GaN Systems Inc.

Tape and Reel Information

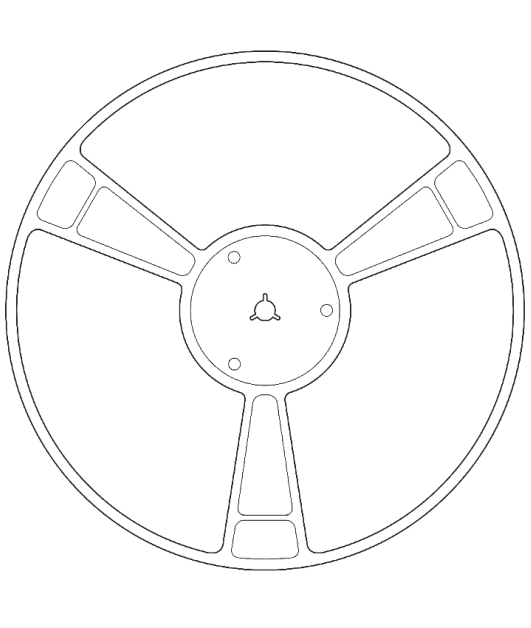

Dimensions (mm)

13 inch reel	Min	Max	7 inch reel	Min	Max
Di	328.0	332.0	Di	178.0	181.5
Wo		22.4	Wo		22.4
Wi	16.4	18.4	Wi	16.3	18.4
Hu	98.5	104.0	Hu	60.0	62.0
Hh	16.4	17.4	Hh	16.2	17.8
Sw	1.5	2.5	Sw	1.5	2.5
Hd	12.8	13.5	Hd	12.8	13.4

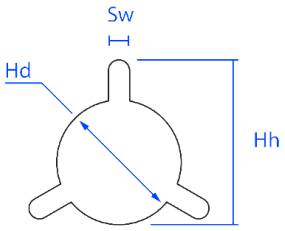

Note: Wo and Wi measured at hub

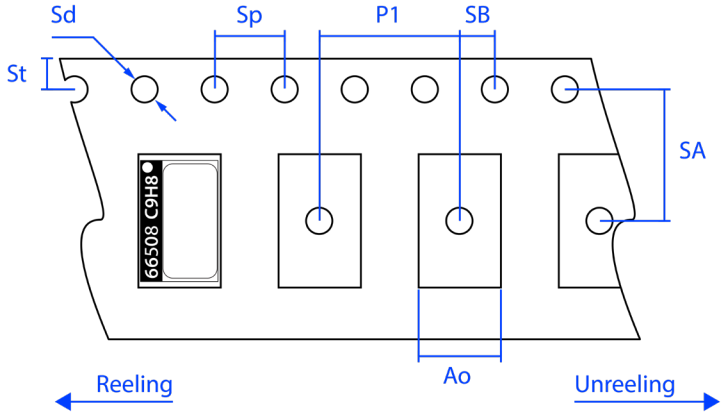

Dimensions (mm)

	Nominal	Tolerance
P1	8.00	+/- 0.1
W	16.00	+/- 0.3
Ko	1.10	+/- 0.1
Ao	4.70	+/- 0.1
Bo	7.60	+/- 0.1
Sp	4.00	+/- 0.02
Sd	1.50	+ 0.1 / - 0.0
St	1.75	+/- 0.1
SA	7.50	+/- 0.1
SB	2.00	+/- 0.1

© 2009-2020 GaN Systems Inc.

Tape and Reel Box Dimensions

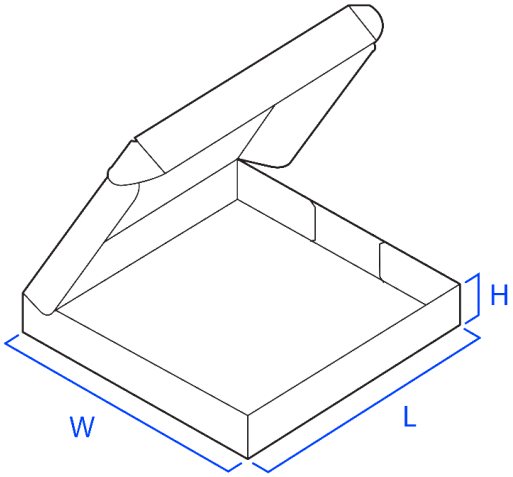

Outside dimensions (mm)

13 inch reel			7 inch reel		
	Min	Max		Min	Max
W	197.0	203.5	W	337.0	342.0
L	204.0	218.5	L		355.0
H		32.0	H	50.0	53.0

www.gansystems.com

Important Notice – **Unless expressly approved in writing by an authorized representative of GaN Systems, GaN Systems components are not designed, authorized or warranted for use in lifesaving, life sustaining, military, aircraft, or space applications, nor in products or systems where failure or malfunction may result in personal injury, death, or property or environmental damage. The information given in this document shall not in any event be regarded as a guarantee of performance. GaN Systems hereby disclaims any or all warranties and liabilities of any kind, including but not limited to warranties of non-infringement of intellectual property rights. All other brand and product names are trademarks or registered trademarks of their respective owners. Information provided herein is intended as a guide only and is subject to change without notice. The information contained herein or any use of such information does not grant, explicitly, or implicitly, to any party any patent rights, licenses, or any other intellectual property rights. GaN Systems standard terms and conditions apply. All rights reserved.**

© 2009-2020 GaN Systems Inc.