SESD Series Ultra Low Capacitance Diode Arrays

SPA® Diodes

AUTOMOTIVE GRADE | RoHS | Pb | ELV

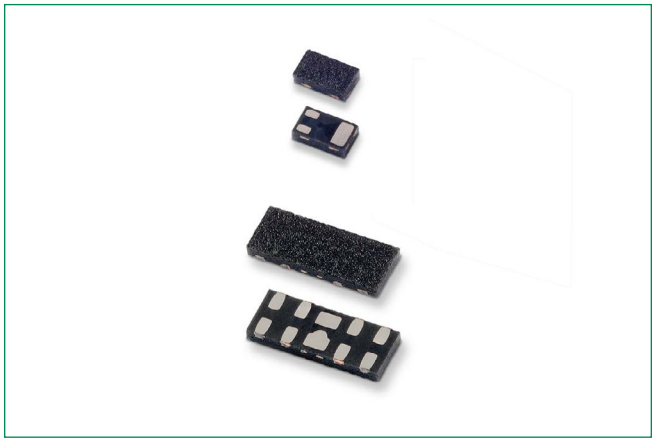

Web Resources

Download ECAD models, order samples, and find technical recources at www.littelfuse.com

Pinout

0402 DFN array

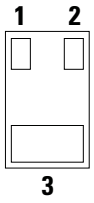

1004 DFN array

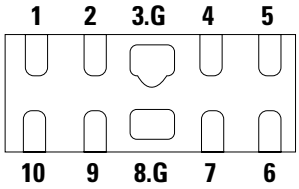

Bottom View

Description

The SESD series Ultra Low Capacitance Diode Arrays provides signal integrity-preserving unidirectional ESD protection for the world's most challenging high speed serial interfaces. Compelling packaging options including the standard 1004 DFN 2.5 mm x 1.0 mm layout and save significant PCB space. The 0402 DFN provides the most flexibility for PCB layout purposes. This series is rated in excess of 20kV contact ESD protection (IEC 61000-4-2) while maintaining extremely low leakage and dynamic resistance, and is offered in the industry's most progressive and popular footprints. The SESD series sets higher standards for signal integrity and usability.

Features

- 0.20pF TYP capacitance
- ESD, IEC 61000-4-2, ±20kV contact, ±20kV air
- Low clamping voltage of 9.2V @ IPP=2.0A (tP=8/20µs)
- Low profile DFN array packages
- Facilitates excellent signal integrity
- AEC-Q101 qualified
- Moisture Sensitivity Level(MSL-1)
- ELV Compliant
- RoHS Compliant and Lead Free
- PPAP capable

Applications

- USB 3.1, 3.0, 2.0
- HDMI 2.0, 1.4a, 1.3
- DisplayPort(TM)
- V-by-One®)
- Thunderbolt
- LVDS interfaces
- Consumer, mobile and portable electronics
- Tablet PC and external storage with high speed interfaces
- Applications requiring high ESD performance in small packages
- Automotive applications

Functional Block Diagram

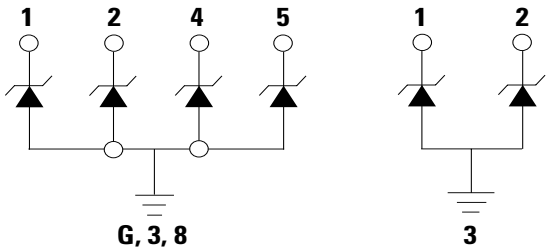

0802/1004 DFN array

0402 DFN array

© 2024 Littelfuse, Inc.
Specifications are subject to change without notice.

Revised: GD. 02/02/24

SESD Series Ultra Low Capacitance Diode Arrays
SPA® Diodes

Absolute Maximum Ratings

Symbol	Parameter	Value	Units
I_{PP}	Peak Current (t_p=8/20µs)	2.0	A
T_{OP}	Operating Temperature	-55 to 125	°C
T_{STOR}	Storage Temperature	-55 to 150	°C

CAUTION: Stresses above those listed in "Absolute Maximum Ratings" may cause permanent damage to the component. This is a stress only rating and operation of the component at these or any other conditions above those indicated in the operational sections of this specification is not implied.

Electrical Characteristics - (T_{OP}=25°C)

Parameter	Test Conditions	Min	Typ	Max	Units
Input Capacitance	@ V_R = 0V, f = 3GHz		0.20	0.22	pF
Breakdown Voltage	V_{BR} @ I_T=1mA		9.00		V
Reverse Working Voltage				7.0	V
Reverse Leakage Current	I_L @ V_{RWM}=5.0V		25	50	nA
Clamping Voltage	V_{CL} @ I_{PP}=2.0A		9.20		V
Peak Pulse Current	t_p=8/20µs			2.0	A
ESD Withstand Voltage	IEC61000-4-2 (Contact)	±20			kV
	IEC 61000-4-2 (Air)	±20			

Insertion Loss Diagram

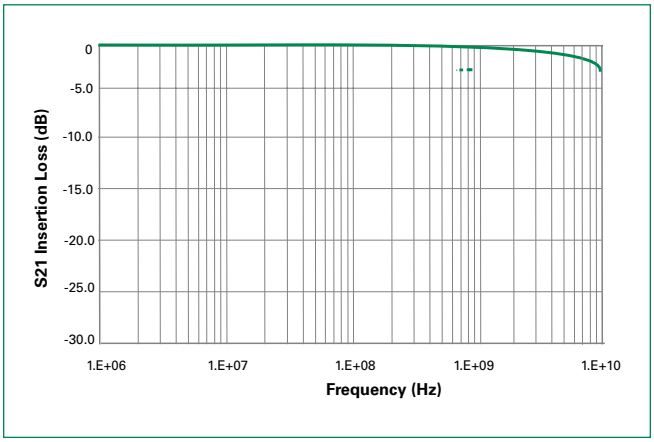

Component IV Curve

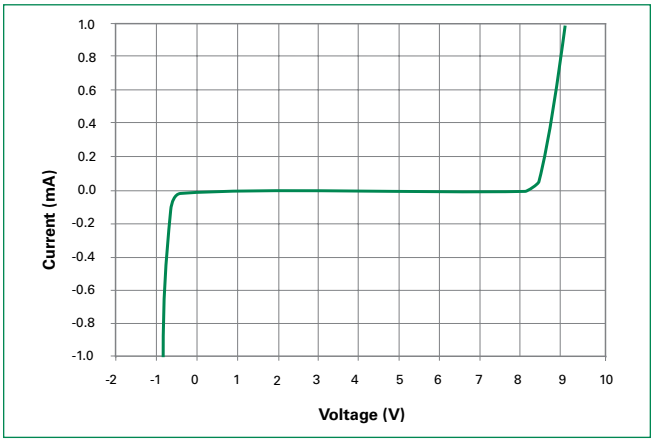

© 2024 Littelfuse, Inc.
Specifications are subject to change without notice.
Revised: GD. 02/02/24

SESD Series Ultra Low Capacitance Diode Arrays
SPA® Diodes

USB3.0 Eye Diagram

5.0 Gb/s, 1000mV differential, CPO Compliant Test Pattern

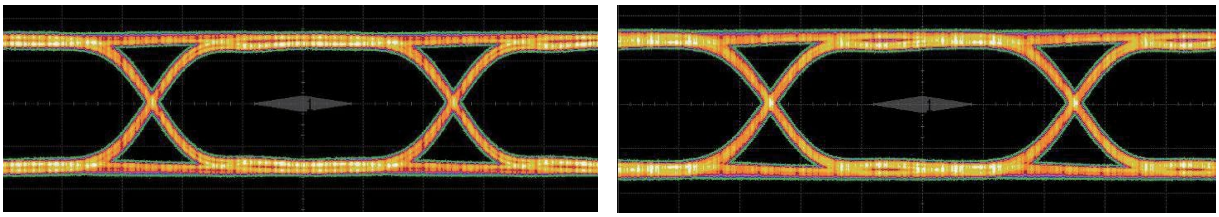

Without SESD Device **With SESD Device**

Soldering Parameters

Reflow Condition		Pb – Free assembly
Pre Heat	**- Temperature Min ($T_{s(min)}$)**	150°C
	- Temperature Max ($T_{s(max)}$)	200°C
	- Time (min to max) (t_s)	60 – 120 secs
Average ramp up rate (Liquidus) Temp (T_L) to peak		3°C/second max
$T_{S(max)}$ to T_L - Ramp-up Rate		3°C/second max
Reflow	**- Temperature (T_L) (Liquidus)**	217°C
	- Temperature (t_L)	60 – 150 seconds
Peak Temperature (T_P)		$260^{+0/-5}$ °C
Time within 5°C of actual peak Temperature (t_p)		30 seconds
Ramp-down Rate		6°C/second max
Time 25°C to peak Temperature (T_P)		8 minutes Max.
Do not exceed		260°C

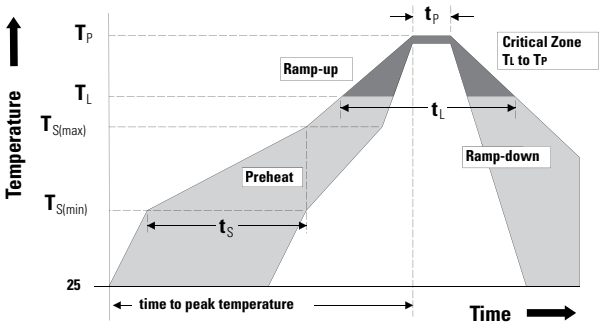

© 2024 Littelfuse, Inc.
Specifications are subject to change without notice.
Revised: GD. 02/02/24

SESD Series Ultra Low Capacitance Diode Arrays
SPA® Diodes

Package Dimensions — 0402 DFN Array

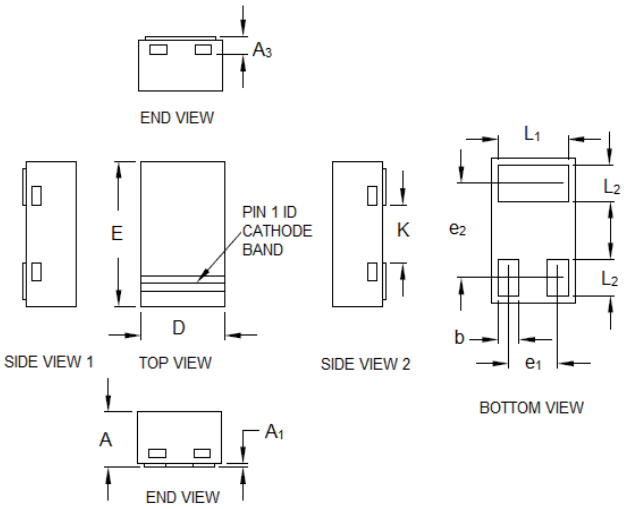

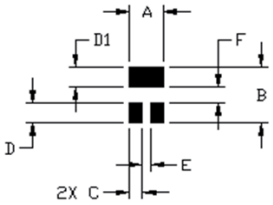

Pad Layout

Symbol	Millimeters			Inches		
	Min	Typ	Max	Min	Typ	Max
A	0.33	0.38	0.43	0.013	0.015	0.017
A1	0	-	0.05	0	-	0.002
A3		0.13 ref.			0.005 ref.	
D	0.55	0.60	0.65	0.022	0.024	0.026
E	0.95	1.00	1.05	0.037	0.039	0.041
K	0.35	0.40	0.45	0.014	0.016	0.018
L1	0.45	0.50	0.55	0.018	0.020	0.022
L2	0.20	0.25	0.30	0.008	0.010	0.012
b	0.10	0.15	0.20	0.004	0.006	0.008
e1		0.35 BSC			0.014 BSC	
e2		0.65 BSC			0.026 BSC	

Symbol	Millimeters	Inches
A	0.60	0.024
B	1.00	0.039
C	0.23	0.009
D	0.35	0.014
D1	0.35	0.014
E	0.15	0.006
F	0.30	0.012

Embossed Carrier Tape & Reel Specification — 0402 DFN Array

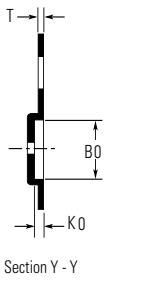

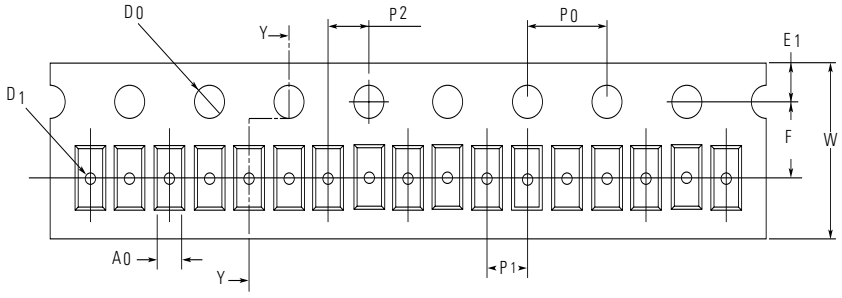

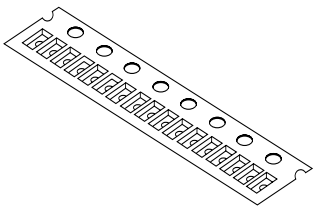

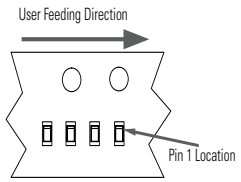

Symbol	Millimeters
A0	0.70+/-0.05
B0	1.15+/-0.05
D0	ø 1.55 + 0.05
D1	ø 0.40 +/- 0.05
E1	1.75+/-0.10
F	3.50+/-0.05
K0	0.47+/-0.05
P0	4.00+/-0.10
P1	2.00+/-0.05
P2	2.00+/-0.05
W	8.00 +/-0.10
T	0.20+/-0.05

© 2024 Littelfuse, Inc.
Specifications are subject to change without notice.
Revised: GD. 02/02/24

SESD Series Ultra Low Capacitance Diode Arrays
SPA® Diodes

Package Dimensions — 1004 DFN Array

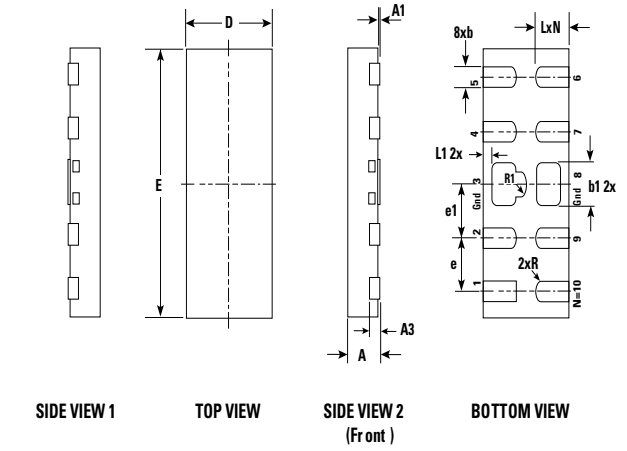

Symbol	Millimeters			Inches		
	Min	Typ	Max	Min	Typ	Max
A	0.33	0.38	0.43	0.013	0.015	0.017
A1	0.00	0.02	0.05	0	–	0.002
A3		0.127 ref.			0.005 ref.	
D	0.90	1.00	1.10	0.035	0.039	0.043
E	2.40	2.50	2.60	0.094	0.098	0.102
b	0.15	0.20	0.25	0.006	0.008	0.010
b1	0.35	0.40	0.45	0.014	0.016	0.018
L	0.33	0.38	0.43	0.013	0.015	0.017
L1	0.00	0.10	0.15	0.000	0.004	0.006
e		0.50 BSC			0.020 BSC	
e1		0.50 BSC			0.020 BSC	
R		0.08 BSC			0.003 BSC	
R1		0.13 BSC			0.005 BSC	
N		10			10	

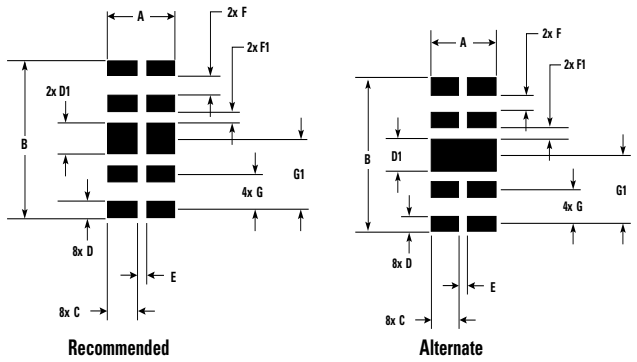

Symbol	Millimeters	Inches
A	1.20	0.047
B	2.20	0.087
C	0.50	0.020
D	0.20	0.008
D1	0.40	0.016
E	0.20	0.008
F	0.30	0.012
F1	0.20	0.008
G	0.50 BSC	0.020 BSC
G1	1.00 BSC	0.039 BSC

Pad Layout

Embossed Carrier Tape & Reel Specification — 1004 DFN Array

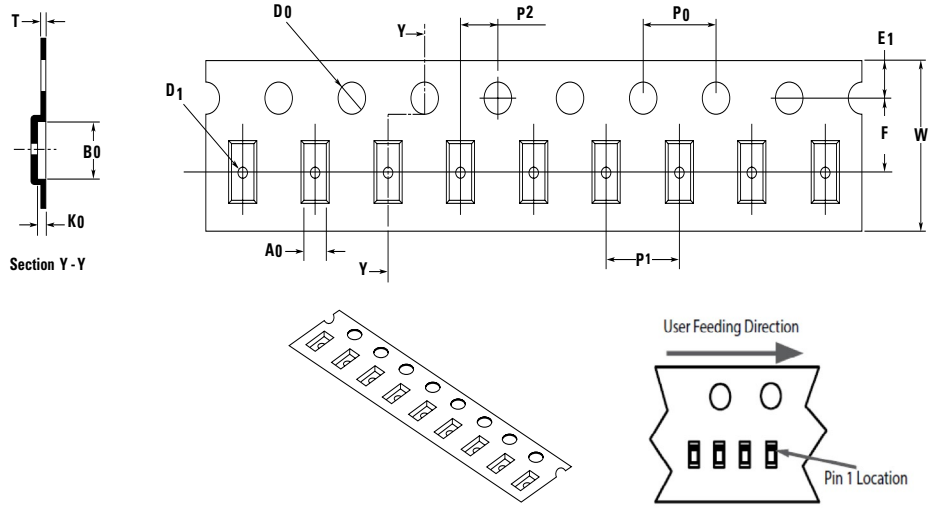

Symbol	Millimeters
A0	1.20+/-0.05
B0	2.70+/-0.05
D0	ø 1.50+0.10/-0
D1	ø 0.50 min
E1	1.75+/-0.10
F	3.50+/-0.05
K0	0.51+/-0.10
P0	4.00+/-0.10
P1	4.00+/-0.10
P2	2.00+/-0.05
W	8.00+0.30/-0.10
T	0.25+/-0.05

© 2024 Littelfuse, Inc.
Specifications are subject to change without notice.
Revised: GD. 02/02/24

SESD Series Ultra Low Capacitance Diode Arrays
SPA® Diodes

Part Numbering System

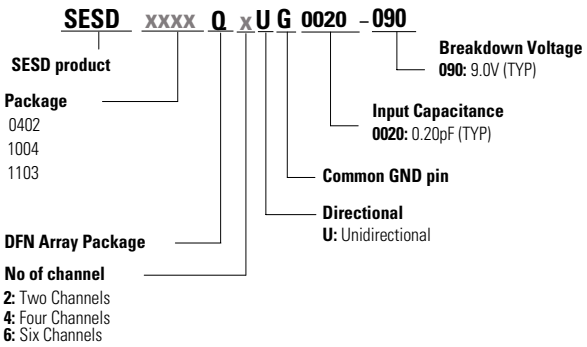

Part Marking System

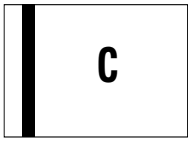

0402



1004

Ordering Information

Part Number	Package	Ordering Part Number	Minimum Order Quantity
SESD0402Q2UG-0020-090	0402 DFN Array	RF2946-000	50,000
SESD1004Q4UG-0020-090	1004 DFN Array	RF3077-000	25,000

Disclaimer Notice - Information furnished is believed to be accurate and reliable. However, users should independently evaluate the suitability of and test each product selected for their own applications. Littelfuse products are not designed for, and may not be used in, all applications. Read complete Disclaimer Notice at http://www.littelfuse.com/disclaimer-electronics.

© 2024 Littelfuse, Inc.
Specifications are subject to change without notice.
Revised: GD. 02/02/24