MC34118

Voice Switched Speakerphone Circuit

General Description

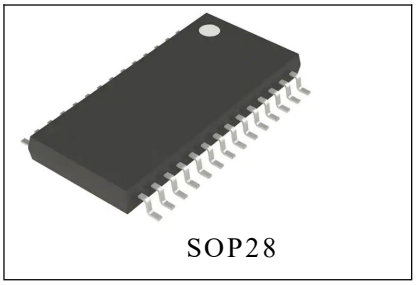
SOP28

The MC34118 Voice Switched Speakerphone Circuit incorporates the necessary amplifiers, attenuators, level detectors, and control algorithm to form the heart of a high quality hands-free speakerphone system. Included are a microphone amplifier with adjustable gain and MUTE control, Transmit and Receive attenuators which operate in a complementary manner, level detectors at both input and output of both attenuators, and background noise monitors for both the transmit and receive channels. A Dial Tone Detector prevents the dial tone from being attenuated by the Receive background noise monitor circuit. Also included are two line driver amplifiers which can be used to form a hybrid network in conjunction with an external coupling transformer. A high-pass filter can be used to filter out 60 Hz noise in the receive channel, or forother filtering functions. A Chip Disable pin permits powering down the entire circuit to conserve power on loops where loop current is at a minimum.

The MC34118 may be operated from a power supply, or it can be powered from the telephone line, requiring typical 5.0 mA. The MC34118 can be interfaced directly to Tip and Ring(through a coupling transformer) for stand-alone operation, or it can be used in conjunction with a handset speech network and/or other features of a feature phone.

MC34118 is available in SOP28 package.

Package Information

Part NO.	Package Description	Package Marking	Package Option
MC34118	SOP28	MC34118 SXXXX	25/Tube 1000/Reel

CHMC:Trademark MC34118:Part NO. SXXXX:Lot NO.

Features

- Improved Attenuator Gain Range: 52dB Between Transmit and Receive
- Low Voltage Operation for Line-Powered Applications(3.0-6.5 V)
- 4-Point Signal Sensing for lmproved Sensitivity
- Background Noise Monitors for Both Transmit and Receive Paths
- Microphone Amplifier Gain Set by External Resistors — Mute Function lncluded
- Chip Disable for Active/Standby Operation
- On Board Filter Pinned-Out for User Defined Function
- Dial Tone Detector to Inhibit Receive Idle Mode During Dial Tone Presence
- Compatible with D34119 Speaker Amplifier

Pin Configuration

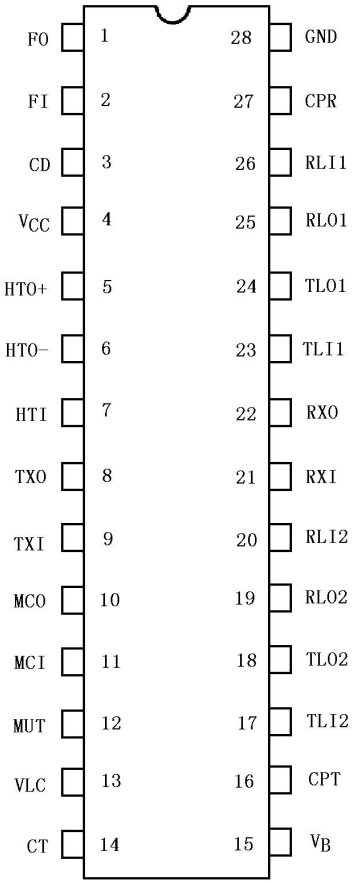

MC34118(SOP28)

Simplified Block Diagram

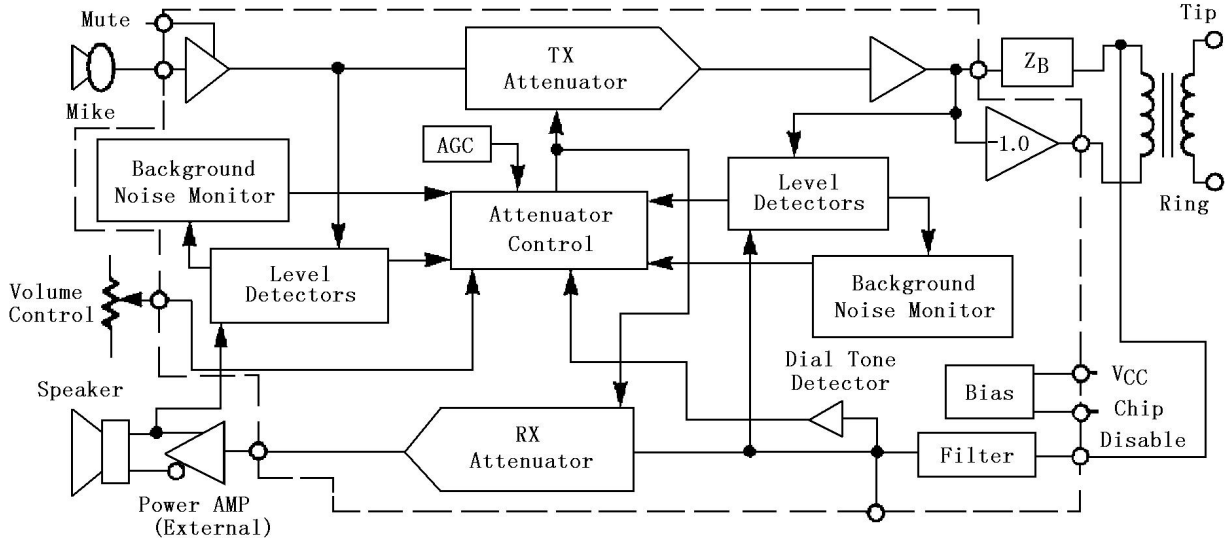

Pin Description

Pin	Description	Symbol
1	I Filter output. Output impedance is less than 50 ohms.	FO
2	Filter input. Input impedance is greater than 1.0 Mohm.	FI
3	Chip Disable. A logic low (<0.8 V) sets normal operation. A logic high (>2.0 V) disables the IC to conserve power. Input impedance is nominally 90 kΩ.	CD
4	A supply voltage of +2.8 to +6.5 volts is required, at = 5,0 mA, As VCC falls from 3.5 to 2.8 volts, an AGC circuit reduces the receive attenuator gain by≈ 25 dB (when in the receive mode).	Vcc
5	Output of the second hybrid amplifier. The gain is internally set at – 1.0 to provide a differential output, in conjunction with HTO –, to the hybrid transformer.	HTO+
6	Output of the first hybrid amplifier. The gain of the amp is set by external resistors.	HTO-
7	Input and summing node for the first hybrid amulifier. DC level is ≈VB.	HTI
8	Output of the transmit attenuator. DC level is approxlmately V_B.	TXO
9	Input to the transmit attenuator. Max. signal level is 350mVrms. Input inpedance is ≈10kΩ.	TXI
10	Output of the mocrophone amplifier. The gain of the amplifier is set by external resistors.	MCO
11	Input and summing mode of the microphone amplifier. DC level is ≈V_B.	MCI
12	Mute input. A logic low(<0.8 V) sets normal Operation. A logic high (>2.0 V) mutes the microphone amplifier without affecting the rest of the circuit. Input impedance is nominalliy 90kΩ.	MUT
13	Volume control input. When VLC = V_B, the receive attenuator is at maximum gain when in the receive mode. When VLC=0.3V_B,the receive gain is down 35dB.Does not affect the transmit mode.	VLC
14	An RC at this pin sets the response time for the circuit to switch modes.	C_T
15	An output voltage ≈Vcc/2. This voltage is a system ac ground,and biases the volume control. A filter cap is reauired.	V_B
16	An RC at this pin sets the time constant for the receive background monitor.	CPT
17	Input to the transmit level detector on the mike/speaker side.	TLI2
18	Output of the transmit level detector on the mike/speaker side, and input to the transmit background monitor.	TLO2
19	Output of the receive level detector on the mike/speaker side.	RLO2

Continue:

Pin	Description	Symbol
20	Input to the receive level detector on the mike/speaker side	RLI2
21	Input to the receive attenuator and dial tone detector. Max input level is 350 mVrms. lnput impedance is ’10 kΩ	RXI
22	Output of the receive attenuator. DC level is approximately V_B.	RXO
23	Input to the transmit level detector on the line side.	TLI1
24	Output of the transmit level detector on the line side.	TLO1
25	Output of the receive level detector on the line side, and input to the receive background monitor.	RLO1
26	Input to the receive level detector on the line side,	RLI1
27	An RC at this pin sets the time constant for the receive background monitor.	CPR
28	Ground pin for the entire IC.	GND

Absolute Maximum Ratings(Ta=25°C)

Parameter	Value	Units
Supply Voltage (Pin 4)	-1.0 ~ +7.0	V
Voltage at CD (Pin 3), Mute (Pin 12)	-1.0 ~ Vcc+1.0	V
Voltage at VLC (Pin 13)	-1.0 ~ Vcc+0.5	V
Voltage at TXI (Pin 9), RXI (Pin 21), FI (Pin 2)	-0.5 ~ Vcc+0.5	V
Storage Temperature	-65 ~ +150	°C

*Devices should not be operated at or outside these values. The “Recommended Operating Limits” provide for actual device.

Recommended Operating Conditions

Parameter	Value	Units
Supply Voltage (Pin 4)	3.5 ~ 6.5	V
CD input (Pin 3),MUT input (Pin 12)	0 ~ Vcc	V
IVB current (Pin 15)	500 (max.)	μA
VLC (Pin 13)	$0.3V_B$ ~ V_B	V
Attenuator input signal voltage(Pins 9,21)	0 ~ 350	mVrms
Microphone amplifier, hybrid amplifier gain	0 ~ 40	dB
Load current @ RXO,TXO (Pins 8,22) @ MCO (Pin 10) @ HTO-,HTO+ (Pins 6,5)	0 ~ ±2.0 0 ~ ±1.0 0 ~ ±5.0	mA
Ambient operating temperature range	-20 ~ +60	°C

Temperature Characteristics

Characteristics	Typical Value (Ta=25°C)	Typical Change (-20 TO +60°C)
Vcc supply current (CD=0.8V)	5.0mA	-0.3%/°C
Vcc supply current (CD=2.0V)	400μA	-0.4%/°C
V_B output voltage (Vcc=5.0V)	2.1V	+0.8%/°C
Attenuator gain (max. gain)	+6.0dB	0.0008dB/°C
Attenuator gain (max. attenuation)	-46dB	0.004dB/°C
Attenuator input resistance (@ TXI,RXI)	10kΩ	+0.6%/°C
Dial tone detector threshold	15mV	+20μV/°C
CT source, sink current	±60μA	-0.15%/°C
Microphone,hybrid amplifier offset	0mV	±4.0μV/°C
Transmit-Receive switching threshold	1.0	±0.02%/°C
Sink current at RLO1,RLO2,TLO1,TLO2	4.0μA	-10nA/°C
Closed loop gain (HTO- to HTO+)	0dB	0.001%/°C

Electrical Characteristics

(unless otherwise specified: Ta=25°C, Vcc=5.0V, CD≤0.8V)

Parameter		Symbol	Condition	Min	Typ	Max	Unit
Power Supply							
Supply current		Icc	Vcc=6.5V,CD=0.8V		5.5	8.0	mA
			Vcc=6.5V,CD=2.0V		600	800	μA
CD input resistance		R_{CD}	Vcc=V_{CD}=6.5V	50	90		kΩ
CD input voltage—High		V_{CDH}		2.0		Vcc	V
CD input voltage—Low		V_{CDL}		0		0.8	V
Output voltage		V_B	Vcc=3.5V		1.3		V
			Vcc=5.0V	1.8	2.1	2.4	V
Output resistance		R_{OVB}	I_{VB}=1.0mA		400		Ω
Power supply rejection ratio		PSRR	C_{VB}=220μF, f=1.0kHz		54		dB
Attenuators (Ta=25°C)							
Receive Attenuator Gain	Rx Mode	G_{RX}	RXI=150mVrms(Vcc=5.0V) RXI=150mVrms(Vcc=3.5V)	4.0	6.0	8.0	dB
	Gain change	ΔG_{RX1}	Vcc=3.5V versus Vcc=5.0V	-0.5	0	+0.5	dB
	AGC gain change	ΔG_{RX2}	Vcc=2.8V versus Vcc=5.0V		-25	-15	dB
	Idle Mode	G_{RXI}	RXI=150mVrms	-22	-20	-17	dB
	Range	ΔG_{RX3}	Rx to Tx mode	49	52	54	dB

Electrical Characteristics (continue)

Parameter	Symbol	Condition	Min	Typ	Max	Unit
Volume control range	V_{CR}	Rx mode $0.3V_B<V_{LC}<V_B$	27	35		dB
RXO DC voltage	V_{RXO}	Rx mode		V_B		V
Δ RXO DC voltage	Δ V_{RXO}	Rx to Tx mode		±10	±150	mV
RXO high voltage	V_{RXOH}	Iout=-1.0mA,RXI=V_B+1.5V	3.7			V
RXO low voltage	V_{RXOL}	Iout=+1.0mA,RXI=V_B-1.0V		-1.5	-1.0	V
RXI input resistance	R_{RXI}	RXI<350mVrms	7.0	10	14	kΩ
Transimit attenuator gain (f=1.0kHz)	G_{TX}	Tx mode, TXI=150mVrms	4.0	6.0	8.0	dB
	G_{TXI}	Idle mode, TXI=150mVrms	-22	-20	-17	dB
	Δ G_{TXI}	Range, Tx to Rx mode	49	52	54	dB
TXO DC voltage	V_{TXO}	Tx mode		V_B		V
Δ TXO DC voltage	Δ V_{TXO}	Tx to Rx mode		±30	±150	mV
TXO high voltage	V_{TXOH}	Iout=-1.0mA,TXI=V_B+1.5V	3.7			V
TXO low voltage	V_{TXOL}	Iout=+1.0mA,TXI=V_B-1.0V		-1.5	-1.0	V
TXI input resistance	R_{TXI}	TXI<350mVrms	7.0	10	14	kΩ
Gain tracking	G_{TR}	G_{RX}+G_{TX},@ Tx,idle,Rx)		±0.1		dB
Attenuator control						
C_T voltage (Pin14-V_B)	V_{CT}	Rx mode ($V_{LC}=V_B$)		240		mV
		Idle mode		0		
		Tx mode		-240		
C_T source current	I_{CTR}	Switching to Rx mode	-85	-60	-40	μA
C_T sink current	I_{CTT}	Switching to Tx mode	40	60	85	μA
C_T slow idle current	I_{CTS}			0		μA
C_T fast idle internal resistance	R_{FI}		1.5	2.0	3.6	kΩ
V_{LC} input current	I_{VLC}			-60		nA
Dial tone detector threshold	V_{DT}		10	15	20	mV
Microphone amplifier (V_{MUT}≤0.8V, A_{VCL}=31dB)						
Output offset	MCO_{VOS}	V_{MCO}-V_B, feedback R=180kΩ	-50		+50	mV
Open loop gain	A_{VOLM}	f<100Hz	70	80		dB
Gain bandwidth	G_{BWM}			1.0		MHz
Output high voltage	V_{MCOH}	Iout=-1.0mA,Vcc=5.0V	3.7			V
Output low voltage	V_{MCOL}	Iout=+1.0mA			200	mV
Input bias current	I_{BM}	@MCI		-40		nA

Electrical Characteristics (continue)

Parameter	Symbol	Condition	Min	Typ	Max	Unit
Muting (ΔGain)	GMT	f=1.0kHz,V_{MUT}=2.0V	-55			dB
		300Hz<f<10kHz		-68		
MUT input resistance	R_{MUT}	Vcc=V_{MUT}=6.5V	50	90		kΩ
MUT input—High	V_{MUTH}		2.0		Vcc	V
MUT input—Low	V_{MUTL}		0		0.8	V
Distortion	THD_M	300Hz<f<10kHz		0.15		%
Hybrid amplifiers						
HTO- offset	H_{VOS}	V_{HTO-} -V_B,feedback R=51kΩ	-20		20	mV
HTO- to HTO+ offset	HB_{VOS}	Feedback R=51kΩ	-30		30	mV
Open loop gain	A_{VOLH}	HTI to HTO-, f<100Hz	60	80		dB
Gain bandwidth	GBW_H			1.0		MHz
Closed loop gain	A_{VCLH}	HTO- to HTO+	-0.35	0	0.35	dB
Input bias current	I_{BH}	@HTI		-30		nA
HTO- high voltage	V_{HT-H}	Iout=-5.0mA	3.7			V
HTO- low voltage	V_{HT-L}	Iout=+5.0mA			250	mV
HTO+ high voltage	V_{HT+H}	Iout=-5.0mA	3.7			V
HTO+ low voltage	V_{HT+L}	Iout=+5.0mA			450	mV
distortion	THD_H	300Hz<f<10kHz		0.3		%
Level detectors and background noise monitors						
Transmit-Receive switching threshold	I_{TH}	Ratio of current at RLI1+RLI2 to 20μA at TLI1+TLI2 to switch from Tx to Rx	0.8	1.0	1.2	
Source current	I_{LSO}	At RLO1,RLO2,TLO1,TLO2		-2.0		mA
Sink current	I_{LSK}	At RLO1,RLO2,TLO1,TLO2		4.0		μA
CPR,CPT output resistance	R_{CP}	Iout=1.5mA		35		Ω
CPR,CPT leakage current	I_{CPLK}			-0.2		μA
Filter						
Voltage offset at FO	FO_{VOS}	V_{FO}-V_B,220kΩ from V_B to FI	-200	-90	0	mV
FO sink current	I_{FO}		150	260	400	μA
FI bias current	I_{FI}			-50		nA
System distortion f=1.0kHz						
Rx mode (FO connected to RXI)	THD_R	From FI to RXO		0.5	3.0	%
Tx mode (includes Tx attenuator)	THD_T	From MCI to HTO-/HTO+		0.8	3.0	%

Block Diagram

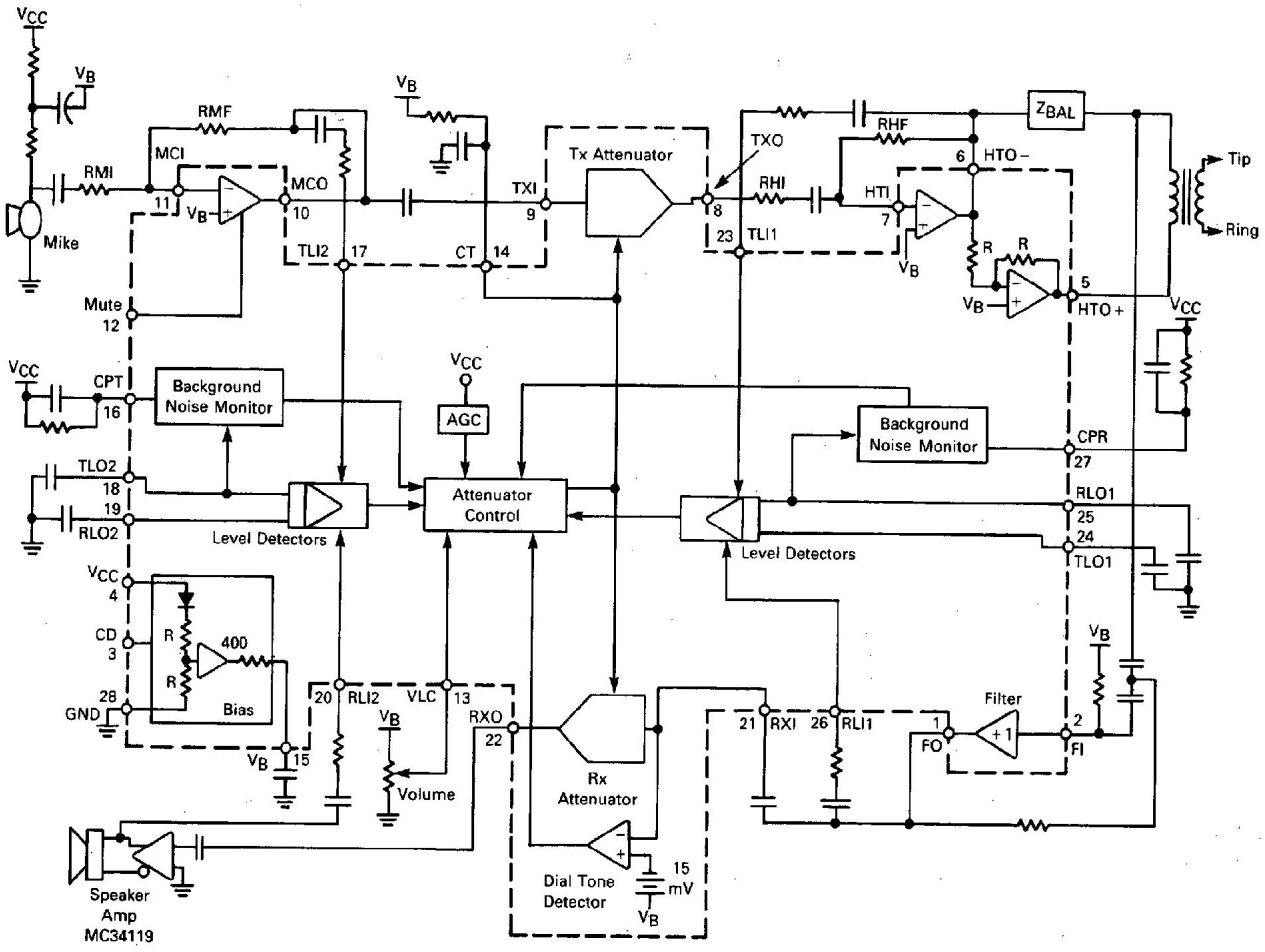

Hybrid Amplifier Distortion Test

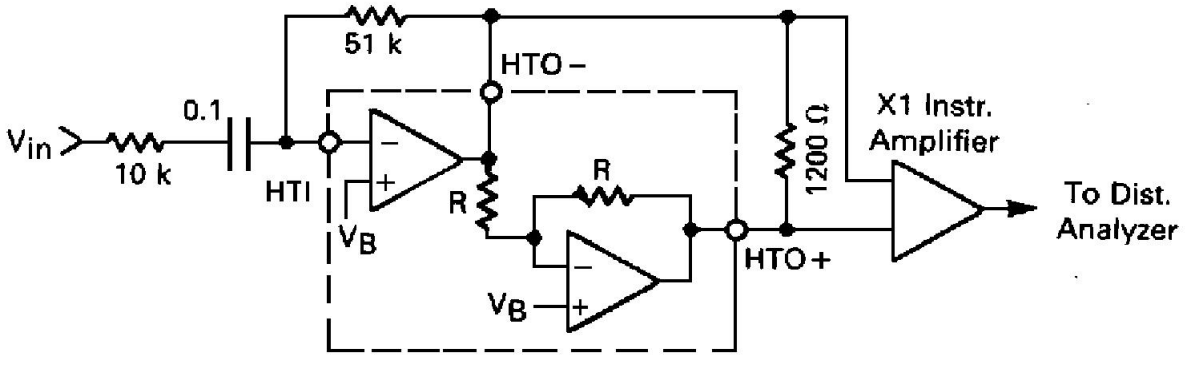

Fig. 1

Application Circuit

(Basic Line Powered Speakerphone)

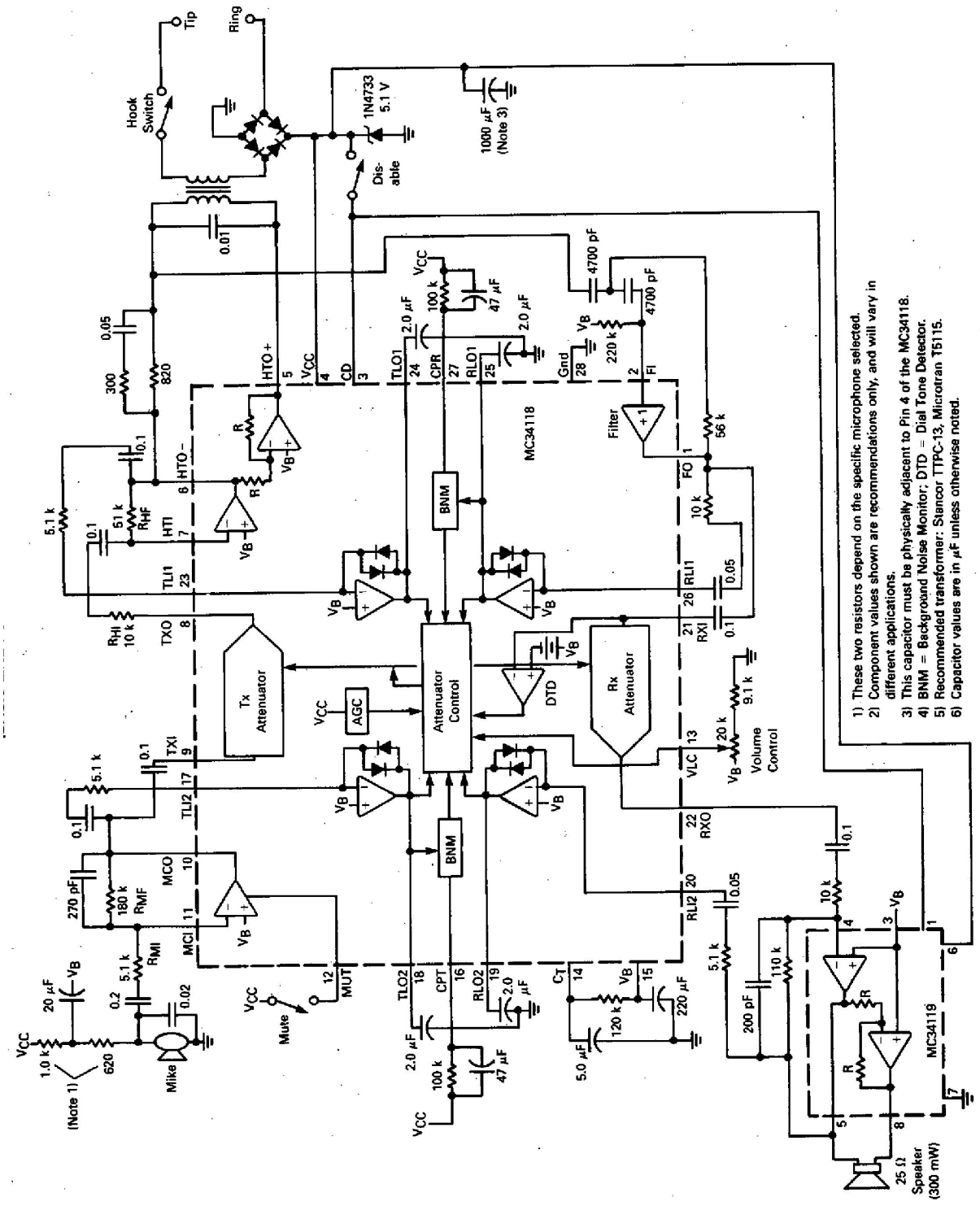

Application Summary

Introduction

The fundamental difference between the operation of a speakerphone and a handset is that of half-duplex versus full-duplex. The handset is full duplex since conversation can occur in both directions (transmit and receive) simultaneously. A speakerphone has higher gain levels in both paths, and attempting to converse full duplex results in oscillatory problems due to the loop that exists within the system. The loop is formed by the receive and transmit paths, the hybrid, and the acoustic coupling (speaker to microphone). The only practical and economical solution used to date is to design the speakerphone to function in a half duplex mode — i.e., only one person speaks at a time, while the other listens. To achieve this requires a circuit which can detect who istalking, switch on the appropriate path (transmit or receive), and switch off (attenuate) the other path. In this way, the loop gain is maintained less than unity. When the talkers exchange function, the circuit must quickly detect this, and switch the circuit appropriately. By providing speech level detectors, the circuit operates in a "hands-free" mode, eliminating the need for a "push-to-talk" switch.

The handset, by the way, has the same loop as the speakerphone, But since the gains are considerably lower, and since the acoustic coupling from the earpiece to the mouthpiece is almost non-existent(the receiver is normally held against a person's ear), oscillations don't occur.

The MC34118 provides the necessary level detectors, attenuators, and switching control for a properly operating speakerphone. The detection sensitivity and d timing are externally controllable. Ad.ditionally,the MC34118 provides background noise monitors which make the circuit insensitive to room and line noise, hybrid amplifiers for interfacing to Tip and Ring, the microphone amplifier, and other associated functions. Please refer to the Block Diagram when reading the following sections.

Attenuators

The transmit and receive attenuators are complementary in function, ie., when one is at maximum gain(+6.0 dB), the other is at maximum attenuation (-46 dB), and,vice versa. They are never both fully on or both fully off. The sum of their gains remains constant (within a nominal error band of ±0.1 dB) at a typical value of-40dB. Their purpose is to control the transmit and receive paths to provide the half-duplex operation

required in a speakerphone.

The attenuators are non-inverting, and have a –3.0 dB (from max gain) frequency of =100 kHz. The input impedance of each attenuator (TXI and RXI) is nominally10 kΩ, and the input signal should be limited to 350 mVrms (990 mVp-p) to prevent distortion. That maximum recommended input signal is independent of the volume control setting. The diode clamp on the inputs Iimitsthe input swing, and therefore the maximum negative output swing. This is the reason for V_{RXOL} and V_{TXOL} specification being defined as they are in the Electrical Characteristics. The output impedance is <10Ω until the output current limit (typically2.5 mA) is reached.

The attenuaors are controlled by the single output of the Control Block, which is measurable at the C_T pin(Pin 14).When the C_T pin is at +240 millivolts with respect to V_B, the circuit is in the receive mode (receive attenuator is at +6.0 dB). When the C_T pin is at –240 millivolts with respect to V_B, the circuit is in the transmit mode (transmit attenuator is at +6.0 dB). The circuit is in an idle mode when the C_T voltage is equal to V_B, causing the attenuators' gains to be halfway between their fully on and fully off positions(-20dB each).Monitoring the C_T voltage(with respect to V_B) is the most direct method of monitoring the circuir's mode.

The inputs to the Control Block are seven: 2 from the comparators operated by the level detectors, 2 from the background noise monitors, the volume control, the dial-tone detector, and the AGC circuit. These seven inputs are described below.

Level Detectors

There are four level detectors — two on the receive side and two on the transmit side. The terms in parentheses form one system, and the other terms form the second system. Each level detector is a high gain amplifier with back-to-back diodes in the feedback path, resulting in non-linear gain, which permits operation over a wide dynamic range of speech levels. Refer to the graphs of Figures 11, 12 and 13 for their dc and ac transfer characteristics. The sensitivity of each level detector is determined by the external resistor and capacitor at each input (TLII, TL12, RLII, and RL12). Each output charges an external capacitor through a diode and limiting resistor, thus providing a dc representation of the input ac signal level. The outputs have a quick rise time (determined by the capacitor and an internal 350Ω resistor), and a slow decay time set by an internal current source and the capacitor. The capacitors on the four outputs should have the same value (±10%) to prevent timing problems. On the receive side,

one level detector (RLII) is at the receive input

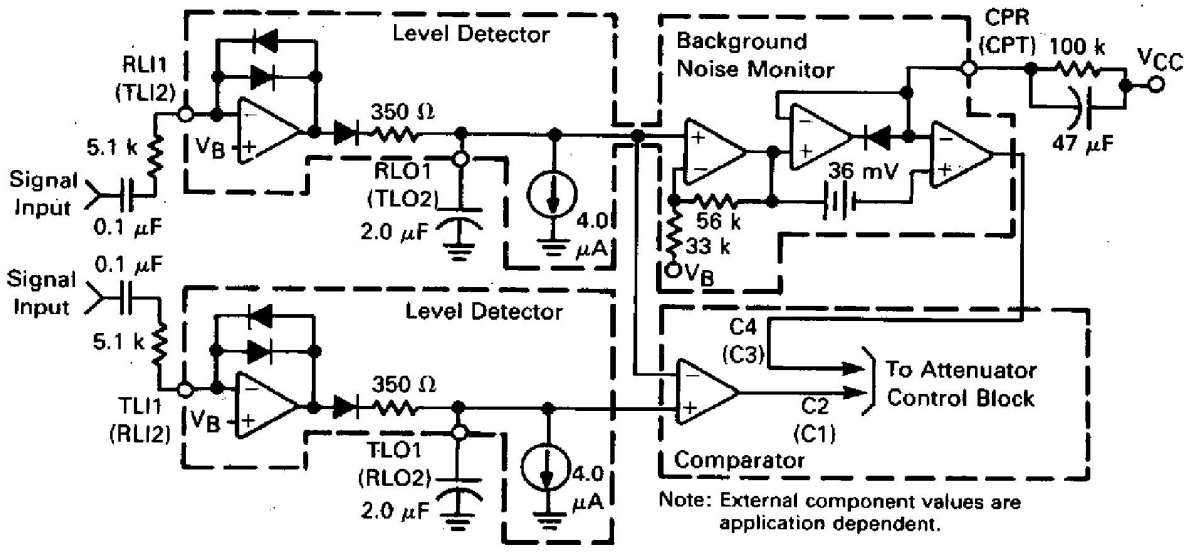

Fig. Level Detectors

receiving the same signal as at Tip and Ring, and the other (RL12) is at the output of the speaker amplifier, On the transmit side, one level detector (TL12) is at the output of the microphone amplifier, while the other (TLII) is at the hybrid output. Outputs RLOI and TLOI feed a comparator, the output of which goes to the Attenuator Control Block. Likewise, outputs RL02 and TL02 feed a second comparator which also goes to the Attenuator Control Block. The truth table for ;he effects of the level detectors on the Control Block is given in the section describing the Control Block.

Background Noise Monitors

The purpose of the background noise monitors is to distinguish speech (which consists of bursts) from background noise (a relatively constant signal level). There are two background noise monitors— one for the receive path and one for the transmit path, the receive background noise monitor is operated on by the RLI1-RLOl level detector, while the transmit background noise monitor is operated on by the TL12-TLO2 level detector.They monitor the background noise by storing a dc voltage representative of the respective noise levels in capacitors at CPR and CPT. The voltage at these pins have slow rise times (determined by the external RC), but fast decay times. If the signal at RLI1 (or TL12) changes slowly, the voltage at CPR(or CPT) will remain more positive than the voltage at the non-inverting input of the monitor's output comparator. When

speech is present, the voltage on the noninverting input of the comparator will rise quicker than the voltage at the inverting input (due to the burst characteristic of speech), causing its output to change. This output is sensed by the Attenuator Control Block.

The 36 mV offset at the comparator's input keeps the comparator from changing state unless the speech level exceeds the background noise by ≈4.0dB.The time constant of the external RC(≈4.7 seconds) determines the response time to background noise variations.

Volume Control

The volume control input at VLC (Pin 13) is sensed as a voltage with respect to V_B. The volume control affects the attenuators on/yin the receive mode, It has no effect in the idle or transmit modes.

When in the receive mode, the gain of the receive attenuator will be +6.0 dB, and the gain of the transmit attenuator will be –46 dB only when VLC is equal to V_B. As VLC is reduced below Vg, the gain of the receive attenuator is reduced, and the gain of the transmit attenuator is increased such that their sum remains constant, Changing the voltage at VLC changes the voltage at C_T (see the Attenuator Control Block section), which in turn controls the attenuators.

The volume control setting does not affect the maximum attenuator input signal at which noticeable distortion occurs.

The bias current at VLC is typically 60 nA out of the pin, and does not vary significantly with the VLC voltage or with V_{CC}.

Dial Tone Detector

The dial tone detector is a comparator with one side connected to the receive input (RXI) and the other input connected to V_B with a 15 mV offset. If the circuit is in the receive mode, and the incoming signal is greater than 15 mV (10 mVrms), the comparator's output will change, disabling the receive idle mode, The receive attenuator will then be at a setting determined solely by the volume control. The purpose of this circuit is to prevent the dial tone(which would be considered as continuous noise) from fading away as the

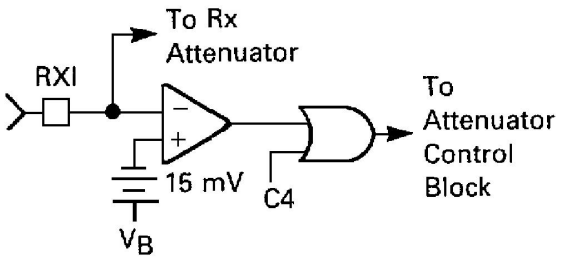

Fig. Dial Tone Detector

circuit would have the tendency to switch to the idle mode. By disabling the receive idle mode, the dial tone remains at the normally expected full level.

AGC

The AGC circuit affects the circuit only in the receive mode, and only when the supply voltage (Vcc) is less than 3.5 volts, As VCC falls below 3.5 volts, the gain of the receive attenuator is reduced . The transmit path attenuation changes such that the sum of the transmit and receive gains remains constant.

The purpose of this feature is to reduce the power(and current) used by the speaker when a line-powered speakerphone is connected to a long line, where the available power is limited. By reducing the speaker power,the voltage sag at Vcc is controlled,preventing possible erratic operation.

Attenuator Control Block

The Attenuator Control Block has the.seven inputs described above:

- The output of the comparator operated by RLO2 and TLO2 (microphone/speaker side) —designated Cl
- The output of the comparator operated by RLOI and TLOI (Tip/Ring side) — designated C2.
- The output of the transmit background noise monitor— designated C3
- The output of the receive background noise monitor— designated C4
- The volume control
- The dial tone detector
- The AGC circuit

The single output of the Control Block controls the two Attenuators. The effect of CI–C4 is as follows:

Inputs				Output Mode
C1	C2	C3	C4	
Tx	Tx	1	X	transmit
Tx	Rx	Y	Y	Fast idle
Rx	Tx	Y	Y	Dast idle
Rx	Rx	X	1	Receive
Tx	Tx	0	X	Slow idle
Tx	Rx	0	0	Slow idle
Rx	Tx	0	0	Slow idle
Rx	Rx	X	0	Slow idle

X = Don’t Care; Y = C3 and C4 are not both 0

A definition of the above terms:

1) “Transmit” means the transmit attenuator is fully on (+ 6.0 dB), and the receive attenuator is at max. attenuation (-46 dB).

2) “Receive” means both attenuators are controlled by the volume control. At max. volume. the rece!ve attenuator is fullv on (+ 6.0 dB), and the transmit attenuator is at max. attenuation’ (-46 dB).

3) “Fast Idle” means both transmit and receive speech are present in approximately equal levels. The attenuators are quickly switched (30 ms)to idle until one speech level dominates the other.

4) “Slow Idle” means speech has ceased in both transmit and receive paths. The attenuators are then slowly switched (1 second) to the idle mode.

5) Switching to the full transmit or receive modes from any other mode is at the fast rate (≈30 ins).

A summary of the truth table is as follows:

1) The circuit will switch to transmit if: a) both transmit level detectors sense higher signal levels relative to the respective receive level detectors (TLII versus RLI1, TL12 versus RL12). And b) the transmit background noise Monitorindicates the presence of speech.

2)The circuit will switch to receive if:a) both receive level detectors sense higher signal levels relative to the respective transmit level detectors,and b) the receive background noise monitor indicates the presence of speech.

3)The circuit will switch to the fast idle mode if the level detectors disagree on the relative strengths of the signal levels,and at least one of the background noise monitors indicates speech. For example,referring to the Block Diagram,if there is sufficient signal at the microphone amp output(TLI2) to override the speaker signal (RLI2), *and* there is sufficient signal at the receive input (RLII) to override the signal at the hybrid output (TLII), *and* either or both background monitors indicate speech, then the circuit will be in the fast idle mode. Two conditions which can cause the fast idle mode to occur are a) when both talkers are attempting to gain control of the system by talking at the same time, and b) when one talker is in a very noisy environment, forcing the other talker to continually override that noise level. In general, the fast idle mode will occur infrequently.

4) The circuit will switch to the slow idle mode when a) both talkers are quiet (no speech present), or b) when one talker’s speech level is continuously overriden by noise at the other speaker’s location.

The time required to switch the circuit between transmit, receive, fast idle and slow idle is determined in part by the components at the C_T pin (Pin 14). (See the section on Switching Times for a more complete explanation of the switching time components.) A schematic of the C_T operates as follows:

- R_T is typically 120 kΩ, and C_T is typically 5.0 µF.
- To switch to the receive mode, 11 is turned on (I2 is off), charging the external capacitor to +240 mV above V_B. (An internal clamp prevents further charging of the capacitor.)
- To switch to the transmit mode, 12 is turned on (I1 is off) bringing down the voltage o; the capacitor to–240 mV with respect to V_B.
- To switch to idle quickly (fast idle), the current sources are turned off, and the internal 2.0 kΩ resistor is switched in, discharging the capacitor to V_B with a time constant = 2.0 k x C_T.
- To switch to idle slowly (slow idle), the current sources are turned off, the switch at the 2.0 kΩ resistor is open, and the capacitor discharges to V_B through the external resistor R_T with a time constant= R_T x C_T.

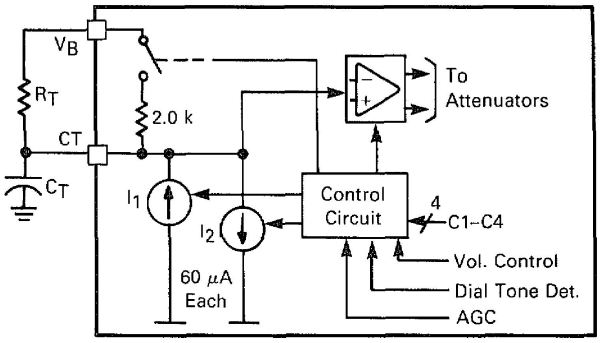

Fig. CT Attenuator control Block Circuit

Microphone Amplifier

The micro~hone amplifier (Pins 10, 11) has the noninverting input internally connected"to V_B, while the inverting input and the output are pinned out. Unlike most op-amps. the amplifier has an all-NPN output stage, which maximizes phase margin and gain- bandwidth. This feature ensures stability at gain less than unity, as well as with a wide range of reactive loads. The open loop gain is typically 80 dB (f <100Hz),and the gain-bandwidth is typically 1.0 MHz.The maximum p-p output swing is typically1.0 volt less than Vcc with an output impedance of <10Ω until current limiting is reached

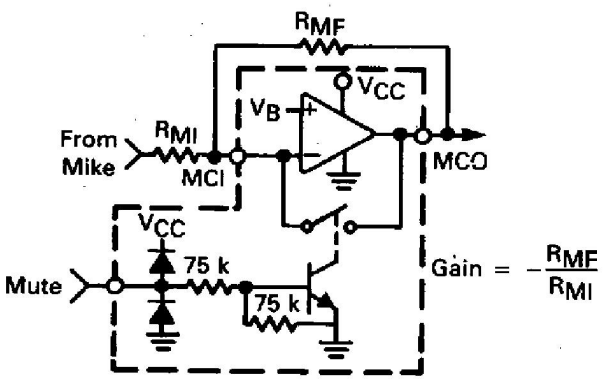

(typically 1.5mA). Input bias current at MCI is typically 40 nA out of the pin.

The muting function(Pin 12),when activated,will reduce the gain of the amplifier to ≈-39dB(with RMI=5.1kΩ) by shorting the output to the inverting input.The mute input has a threshold of ≈1.5 volts,and the voltage at this pin must be kept within the range of ground and Vcc. If the mute function is not used, the pin should be grounded. Fig. Microphone Amplifier and Mute.

Hybrid Amplifiers

The two hybrid amplifiers (at HTO +, HTO -, and HTI), in conjunction with an external transformer, provide the two-to-four wire converter for interfacing to the telephone line. The gain of the first amplifier (HTI to HTO-) is set by external resistors (gain = – R_{HF}/R_{HI}), and its output drives the second amplifier,the gain of which is internally set at – 1.0. Unlike most op--amps, the amplifiers have an all-NPN output stage,which maximizes phase margin and gain-bandwidth.This feature ensures stability at gains less tha unity, as well as with a wide range of reactive loads.The open loop gain of the first amplifier is typically 80dB, and the gain bandwidth of each amplifier is ≈1.0 MHz, The maximum p-p output swing of each amplifier is typically 1.2volts less than V_{CC} with an output impedance of <10Ω until current limiting is reached (typically8.0 mA). The output current capability is guaranteed to be a minimum of 5.0 mA. The bias current at HTI is typically 30nA out of the pin.

The connections to the coupling transformer are shown in the Block Diagram. The block labeled ZBal is the balancing network necessary to match the line impedance.

Filter

The operation of the filter circuit is determined by the external components, The circuit within the MC34118, from pins FI to FO is a buffer with a high input impedance (>1.0 MΩ), and a low output impedance (<50 Ω). The configuration of the external components determines whether the circuit is a high-pass filter, a low-pass filter, or a band-pass filter.

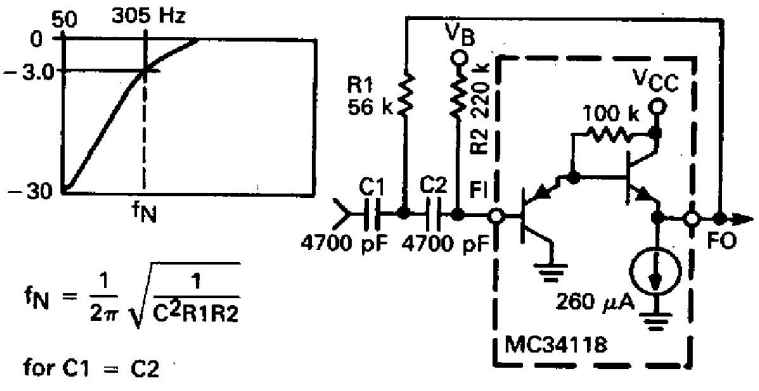

Fig. High Pass Filter

As a high pass filter, the filter will keep out 60 Hz (and 120 Hz) hum which can be

picked up by the external telephone lines.

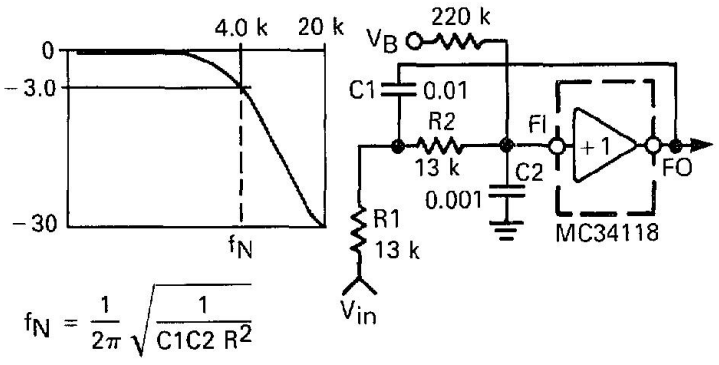

Fig. Low Pass Filter

As a low pass filter,it can be used to roll off the high end frequencies in the receive circuit,which aids in protecting against acoustic feedback problems. With an appropriate choice of an input coupling capacitor to the low pass filter, a band pass filter is formed.

Power Supply,Vg,And Chip Disable

The power supply voltage at V_{CC} (Pin 4) is to be between 3.5 and 6.5 volts for normal operation, with reduced operation possible down to 2.8 volts (see the AGC section). The power supply current is for both the power-up and powerdown mode.

The output voltage at V_B (Pin 15) is ≈(Vcc - 0.7)/2, and provides the ac ground for the system. The output impedance at VB is≈400Ω), and in conjunction with the external capacitor at V_B, forms a low pass filter for power supply rejection. The choice of capacitor is application dependent based on whether the circuit is powered by the telephone line or a power supply.

Since V_B biases the microphone and hybrid amplifiers, the amount of supply rejection at their outputs is directly related to the rejectionat V_B ,as well as their respective gains.

The Chip Disable (Pin 3) permits powering down the IC to conserve power and/or muting purposes. With CD≤0.8 volts, normal operation is in effect. With CD≥2.0 volts and≤ <Vcc ,the IC is powered down, In the powered down mode,the microphone and the hybrid amplifiers are disabled, and their outputs go to a high impedance state. Atiditionally, the bias is removed from the level detectors. The bias is not removed from the filter (Pins 1,2), the attenuators (Pins 8, 9, 21, 22), or from Pins 13,14 and 15 (the attenuators are disabled, however, and will not pass a signal). The input impedance at CD is typically 90 kΩ, has a threshold of ≈1.5 volts, and the voltage at this pin must be kept within the range of ground and Vcc. If CD is not used,the pin should be grounded.

Characteristics

ATTENUATOR GAIN versus V_{CT} (PIN 14)

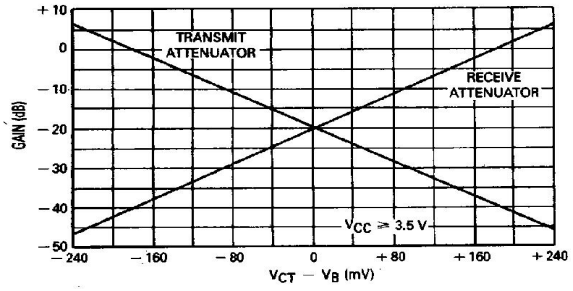

LEVEL DETECTOR DC TRANSFER CHARACTERISTICS

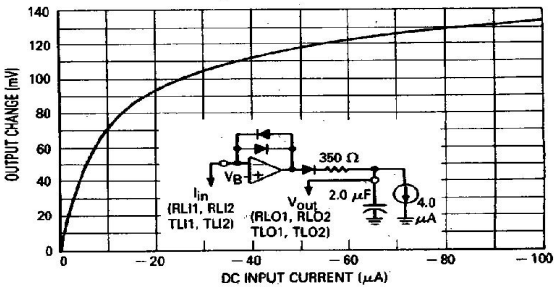

LEVEL DETECTOR AC TRANSFER CHARACTERISTICS

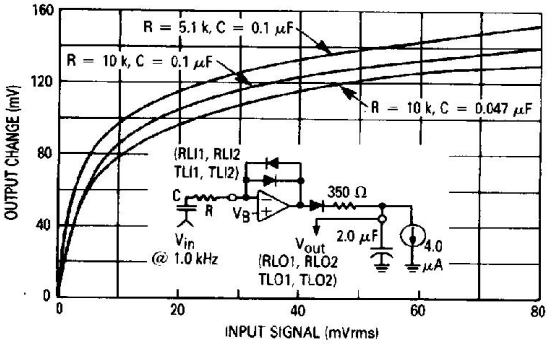

LEVEL DETECTOR AC TRANSFER CHARACTERISTICS versus FREQUENCY

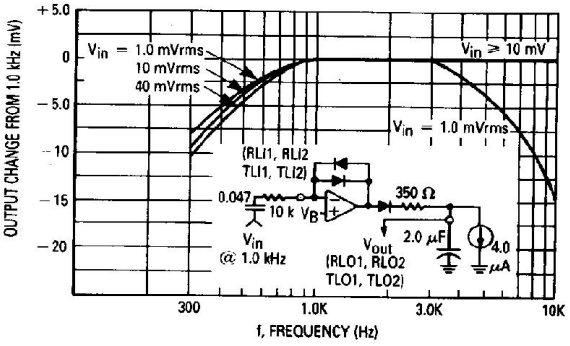

RECEIVE ATTENUATOR versus VOLUME CONTROL

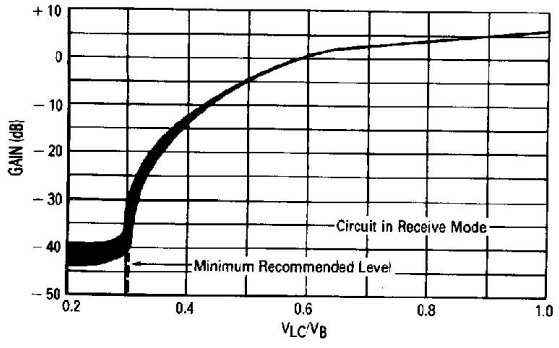

RECEIVE ATTENUATION GAIN versus V_{CC}

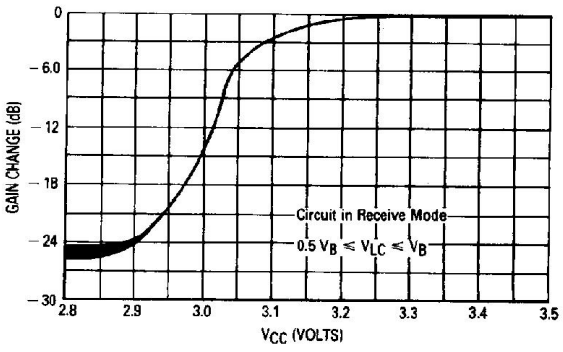

MICROPHONE AMPLIFIER AND 1ST HYBRID AMPLIFIER OPEN LOOP GAIN AND PHASE

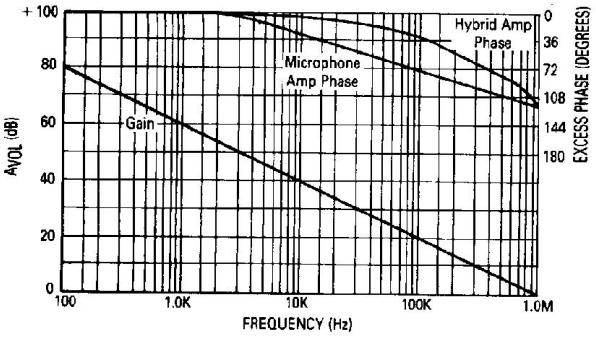

INPUT CHARACTERISTICS @ CD, MUT

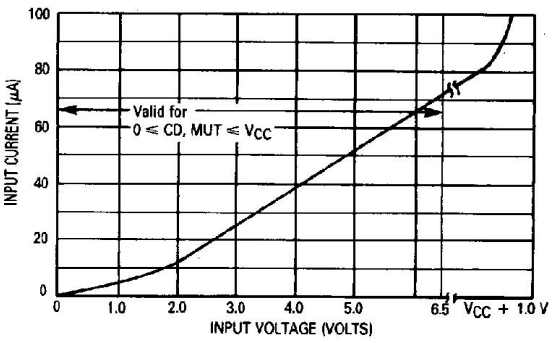

SUPPLY CURRENT versus SUPPLY VOLTAGE

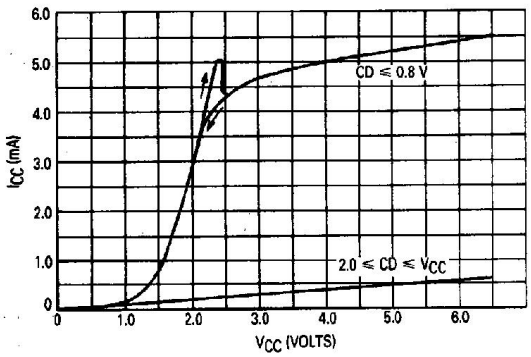

V_B OUTPUT CHARACTERISTICS

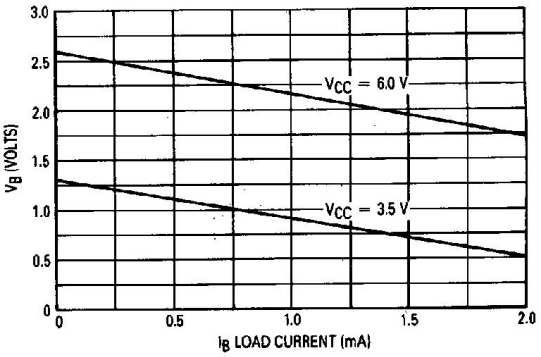

V_B POWER SUPPLY REJECTION versus FREQUENCY AND V_B CAPACITOR

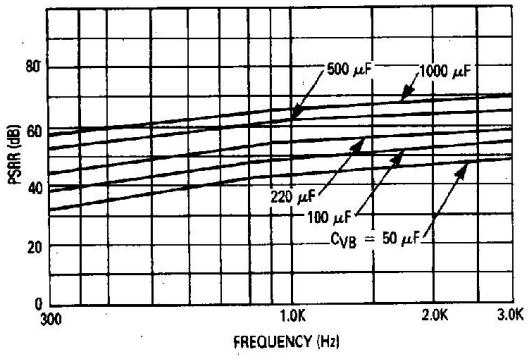

POWER SUPPLY REJECTION OF THE MICROPHONE AND HYBRID AMPLIFIERS

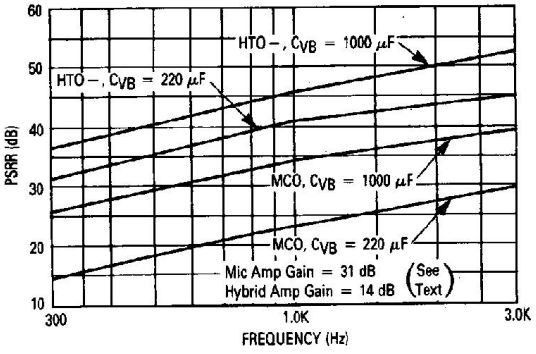

TYPICAL OUTPUT SWING versus V_{CC}

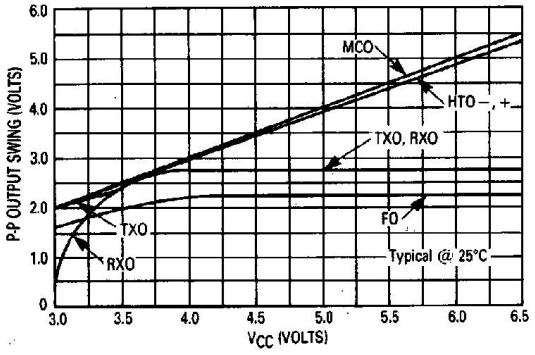

Design Guidelines

Switching Time

The switching time of the MC34118 circuit is dominated by the components at CT (Pin 14), and secondarily by the capacitors at the level detector outputs (RLOI, RLO2, TLOI, TLO2).

The time to switch to receive or to transmit from idle is determined by the capacitor at C_T, together with the internal current sources. The switching time is:

$$\Delta T = \frac{\Delta V \times C_T}{I}$$

For the typical case where ΔV = 240 mV, I = 60 μA, and C_T is 5.0 μF, ΔT = 20 ms. If the circuit switches directly from receive to transmit (orvice-versa), the totalswitching time would be 40 ms.

The switching time from either receive or transmit to idle depends on which type of idle mode is in effect. If the circuit is going to “fast idle,” the time constant is determined by the C_T capacitor, and the internal 2.0 kΩresistor. With C_T = 5.0μF, the time constant is ≈10 ms, giving a switching time to idle of ≈30 ms (for 95% change), Fast idle is an infrequent occurrence, however, occurring when both speakers are talking and competing for control of the circuit. The switching time from idle back to either transmit or receive is described above.

If the circuit is switching to “slow idle,” the time constant is determined by the C_T capacitor and R_T,the external resistor. With C_T = 5.0μF,and R_T = 120 kΩ, the time constant is ≈600ms,giving a switching time of ≈1.8 seconds (for 95% change).The switching period to slow idle begins when both speakers have stopped talking. The switching time back to the original mode will depend on how soon that speaker begins speaking again. The sooner the speaking starts during the 1.8 second period, the quicker the switching time since a smaller voltage excursion is required. That switching time is determined by the internal current sources as described above.

The above switching times occur, however, after the level detectors have detected the appropriate signal levels, since their outputs operate the Attenuator Control Block. The rise time of the level Detectors’outputs to new speech is quick by comparison (≈1.0ms), determined by the internal 350 Ω resistor and the external capacitor (typically 2.0μF). The output’s decay time is determined by the external capacitor, and an internal 4.0 μA current source giving a decay rate of ≈60 ms for a 120 mV excursion at RLO or TLO, However, the overall response time of the circuit is not a constant since it depends on the relative strength of the signals at the different level detectors, as well as the timing of the signals with respect to each other. The capacitors at the four outputs (RLOI, RLO2, TLOI, TLO2) must be equal value (±10%) to prevent problems in timing and level response.

The rise time of the level detector’s outputs is not significant since it is so short.

The decay time, however, provides a significant part of the “hold time” necessary to hold the circuit during the normal pauses in speech.

The components at the inputs of the level detectors(RLI1, RL/I2, TLI1, TLI2) do not affect the switching time, but rather affect the relative signal levels required.to switch the circuit, as well as the frequency response of the detectors.

Design Equations

Referring to the coupling capacitors have been omitted for simplicity, the following definitions will be used (all measurements are at 1.0 kHz):

- G_{MA} is the gain of the microphone amplifier measured from the microphone output to TXI (typically35 V/V, or 31 dB)
- G_{TX} is the,gain of the transmit attenuator, measured from TXI to TXO
- G_{HA} is the gain of hybrid amplifiers, measured from TXO to the HTO – /HTO + differential output (typically10.2 V/V, or 20.1 dB);
- G_{HT} is the gain from HTO-/HTO+ to Tip/Ring for transmit signals,and includes the balance network(measured at 0.4V/V,or –8.0dB)
- G_{ST} is the sidetone gain, measured from HTO -/ HTO+ to the filter input (measured at 0,18 V/V, or–15 dB);
- G_{HR} is the gain from Tip/Ring to the filter input for receive signals (measured at 0.833 V/V or – 1.6 dB);
- G_{FO} is the gain of the filter stage, measured from the input of the filter to RXI, typically 0dB at 1,0 kHz;
- G_{RX} is the gain of the receive attenuator measured from RXI to RXO;
- G_{SA} is the gain of the speaker amplifier, measured from RXO to the differential output of the D34119(typically 22 V/V or 26.8 dB);
- G_{AC} is the acoustic coupljng, measured from the speaker differential voltage to the microphone output voltage.

I)Transmit Gain

The transmit gain, from the microphone output (V_M) to Tip and Ring, is determined by the output characteristics of the microphone, and the desired transmit level. For example, a typical electret microphone will produce ≈0.35 mVrms under normal speech conditions, To achieve 100 mVrms at Tip/Ring, an overall gain of285 V/V is necessary. The gain of the transmit attenuator is fixed at 2.0 (+6,0 dB), andthe gain through the hybrid of Figure 23 (G_{HT}) is nominally 0.4 (–8.0 dB). Therefore a gain of 357 V/V is required of the microphone and hybrid amplifiers, It is desirable to have the majority of

that gain in the microphone amplifier for three reasons: 1) the low level signals from the microphone should be amplified as soon as possible to

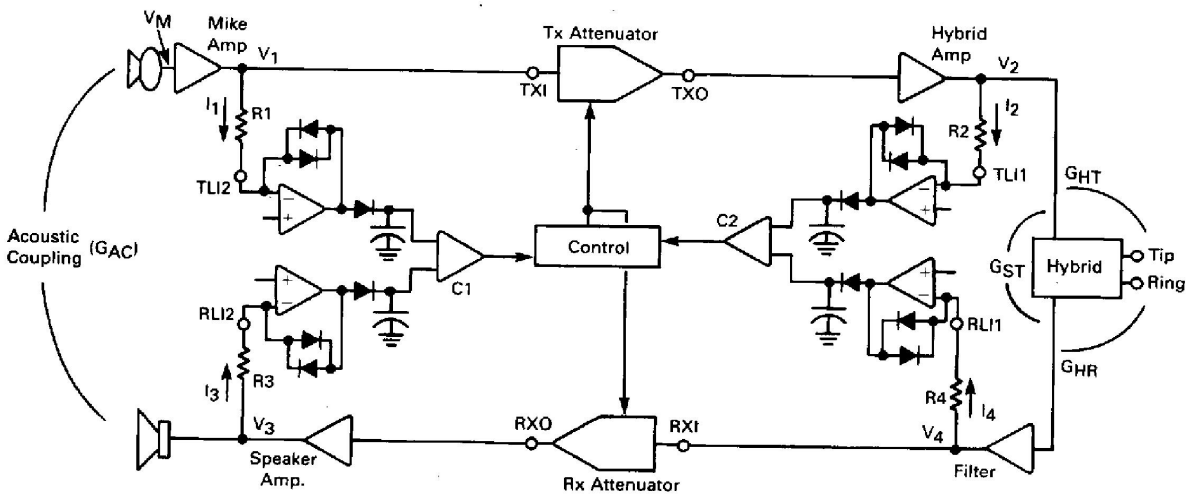

Fig. Basic Block Diagram for Design Purposes

minimize signal /noise probiems; 2) to provide a reasonable signal level to the TLI2 level detector; and 3) to minimize any gain applied to broadband noise generated within the attenuator. However, to cover the normal voiceband, the microphone amplifier's gain should not exceed 48 dB. For the circuit, the gain of the microphone amplifier was set at 35 V/V (31 dB), and the differential gain of the hybrid amplifiers was set at 10.2 V/V (20.1 dB).

II)Receive Gain

The overall receive gain depends on the incoming signal level, and the desired output power at the speaker. Nominal receive levels (independent of the peaks) at Tip/Ring can be 35mVrms (–27 dBm), although on long lines that level can be down to 8.0 mVrms (–40 dBm). The speaker power is:

$$P_{SPK} = \frac{10dBm/10 \times 0.6}{Rs} \qquad \text{(Equation 1)}$$

where R_S is the speaker impedance, and the dBm term is the incoming signal level increased by the gain of the receive path.Experience has shown that ≈30 dB gain is a satisfactory amount for the majority of applications. Using the above numbers and Equation 1, it would Appear that the resulting power to the speaker is extremely low, However, Equation 1 does not consider the peaks in normal speech, which can be 10 to 15 times the rms value. Considering the peaks, the overall average power approaches

20–30 mW on long lines, and much more on short lines.

The gain from Tip/Ring to the Filter input was measured at 0.833V/V(-1.6dB), the filter's gain is unity, and the receive attenuator's gain is2.0V/V(+6.0 dB) at maximum volume. The speaker amplifier's gain is set at 22 V/V (26.8 dB), which puts the overall gain at ≈31.2 dB.

III) Loop Gain

The total loop gain must add up to less than zero dB to obtain a stable circuit. This can be expressed as:

$G_{MA} + G_{TX} + GHA + G_{ST} + G_{FO} + G_{RX} + G_{SA} + G_{AC} < 0$ (Equation 2)

Using the typical numbers mentioned above, and knowing that $G_{TX} + G_{RX} = -40$ dB, the required acoustic coupling can be determined:

$G_{AC} < -[31 + 20.1 + (-15) + 0 + (-40) + 26.8] = -22.9$ dB. (Equation 3)

An acoustic loss of at least 23 dB is necessary to prevent instability and oscillations, commonly referred to as "singing. " However, the following equations show that greater acoustic loss is necessary to obtain proper level detection and switching.

IV) Switching Thresholds

To switch comparator Cl, currents 11 and 13 need to be determined. With a receive signal V_L applied to Tip/Ring, a current 13 will flow through R3 into RLI2 according to the following equation:

$$I_3 = \frac{V_L}{R3}\left[G_{HR} \times G_{FO} \times G_{RX} \times \frac{G_{SA}}{2}\right]$$ (Equation 4)

where the terms in the brackets are the V/V gain terms. The speaker amplifier gain is divided by two since G_{SA} is the differential ga;n of the amplifier, and V3 is obtained from one side of that output. The current I1, coming from the microphone circuit, is defined by:

$$I1 = \frac{V_M \times G_{MA}}{R1}$$ (Equation 5)

where V_M is the microphone voltage. Since the switching threshold occurs when 11 = 13, combining the above two equations yields:

$$V_M = V_L \times \frac{R1}{R3} \quad \frac{[G_{HR} \times G_{FO} \times G_{RX} \times G_{SA}]}{G_{MA} \times 2}$$ (Equation 6)

This is the general equation defining the microphone voltage necessary to switch comparator Cl when a receive signal VL is present. The highest V_M occurs when the receive attenuator is at maximum gain (+6.0 dB). Using the typical numbers for Equation 6 yields:

$$V_M = 0.52\ V_L \qquad \text{(Equation 7)}$$

To switch comparator C2, currents 12 and 14 need to be determined. With sound applied to the microphone, a voltage V_M is created by the microphone, resulting in a current I2 into TLI1:

$$I_2 = \frac{V_M}{R2}\left[G_{MA} \times G_{TX} \times \frac{G_{HA}}{2}\right] \qquad \text{(Equation 8)}$$

Since GHA is the differential gain of the hybrid amplifiers, it is divided by two to obtain the voltage V2 applied to R2.Comparator C2 switches when I4=I2.I4 is defined by:

$$I_4 = \frac{V_L}{R4}[G_{HR} \times G_{FO}] \qquad \text{(Equation 9)}$$

Setting I4 = I2, and combining the above equations results in:

$$V_L = V_M \times \frac{R4}{R2} \quad \frac{[G_{MA} \times G_{TX} \times G_{HA}]}{[G_{HR} \times G_{MA} \times 2]} \qquad \text{(Equation 10)}$$

This equation defines the line voltage at Tip/Ring necessary To switch comparator C2 in the presence of a microphone voltage. The highest V_L occurs when the circuit is in the transmit mode (G_{TX} = +6.0 dB). Using the typical numbers for Equation 10 yields:

$$V_L = 840 V_M \text{ (or } V_M = 0.0019\ V_L) \qquad \text{(Equation 11)}$$

At idle, where the gain of the two attenuators is–20 dB (0.1 V/V), Equations 6 and 10 yield the same result:

$$V_M = 0.024\ V_L \qquad \text{(Equation 12)}$$

Equations 7, 11, and 12 define the thresholds for switching, and are represented in the following graph:

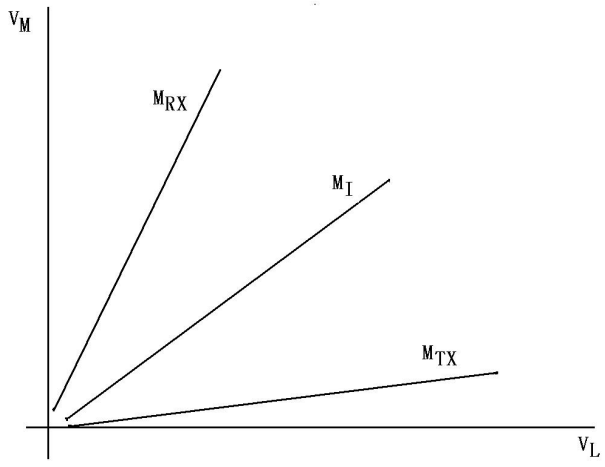

Fig. Switching Thresholds

The “M” terms are the slopes of the lines (0.52, 0.024, and 0.0019) which are the coefficients ofthe three equations.. The M_{RX} line represents the receive to transmit threshold in that it defines the microphone signal level necessary to switch to transmit in the presence of a given receive signal level. The M_{TX} line represents the transmit to receive threshold. The M_I line represents the idle condition, and defines the threshold level on one side (transmit or receive) necessary to overcome noise on the other.

Some comments on the above graph:

- Acoustic coupling and sidetone coupling were not included in Equations 7 and 12. Those couplings will affect the actual performance of the final speakerphone due to their interaction with speech at the microphone, and the receive signal coming in at Tip/Ring. The effects of those couplings are difficult to predict due to their associated phase shifts and frequency response. In some cases the coupling signal will add, and other times subtract from the incoming signal. The physical design of the speakerphone enclosure, as well as the specific phone line to which it is connected, will affect the acoustic and sidetone couplings, respectively.
- The M_{RX} line helps define the maximum acoustic coupling allowed in a system, which can be found from the following equation:

$$G_{AC\text{-}MAX} = \frac{R1}{2 \times R3 \times G_{MA}} \qquad \text{(Equation 13)}$$

Equation 13 is independent of the volume control setting. Conversely, the acoustic coupling of a designed system helps determine the minimum slope of that line.

13 yields a $G_{AC\text{-}MAX}$ – 37 dB. Experience has shown, however, that an acoustic coupling loss of >40 dB is desirable.

- The M_{TX} line helps define the maximum sidetone coupling (G_{ST}) allowed in the

system, which can be found from the following equation:

$$GST = \frac{R4}{2 \times R2 \times G_{FO}} \qquad \text{(Equation 14)}$$

Using the component values in Equation14 yields a maximum sidetone of 0dB, Experience has shown, however, that a minimum of 6.0 dB loss is preferable,
The above equations can be used to determine the resistor values for the level detector inputs, Equation 6 can be used to determine the R1/R3 ratio, and Equation10 can be used to determine the R4/R2 ratio. R1-R4 each represent the combined impedance of the resistor and coupling capacitor at each level detector Input. The magnitude of each RC'S impedance should be kept within the range of 2,0 k-15 kΩ in the voiceband(due to the typical signal levels present) to obtain the best performance from the level detectors. The specific R and C at each location will determine the frequency response of that level detector.

Outline Dimensions

SOP28 Unit: mm

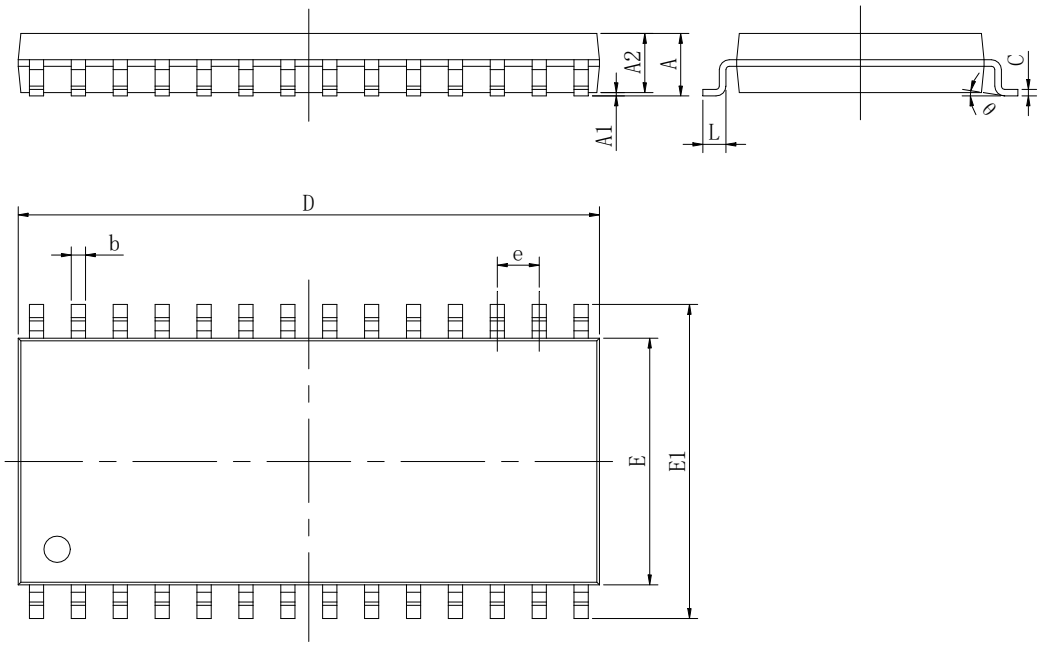

Symbol	Dimensions In Millimeters		Dimensions In Inches	
	Min	Max	Min	Max
A	2.350	2.650	0.093	0.104
A1	0.100	0.300	0.004	0.012
A2	2.290	2.500	0.09	0.098
b	0.330	0.510	0.013	0.020
c	0.204	0.330	0.008	0.013
D	17.700	18.100	0.697	0.713
E	7.400	7.700	0.291	0.303
E1	10.210	10.610	0.402	0.418
e	1.270(BSC)		0.050(BSC)	
L	0.400	1.270	0.016	0.050
θ	0°	8°	0°	8°

Statements

- Silicore Technology reserves the right to make changes without further notice to any products or specifications herein. Before customers place an order, customers need to confirm whether datasheet obtained is the latest version, and to verify the integrity of the relevant information.
- Failure or malfunction of any semiconductor products may occur under particular conditions, customers shall have obligation to comply with safety standards when customers use Silicore Technology products to do their system design and machine manufacturing, and take corresponding safety measures in order to avoid potential risk of failure that may cause personal injury or property damage.
- The product upgrades without end, Silicore Technology will wholeheartedly provide customers integrated circuits that have better performance and better quality.