CIRCUIT SIZE	DIM. "A"	DIM. "B"
2	.21 (5.4)	—
4	.38 (9.6)	.17 (4.2)
6	.54 (13.8)	.33 (8.4)
8	.71 (18.0)	.50 (12.6)
10	.87 (22.2)	.66 (16.8)
12	1.04 (26.4)	.83 (21.0)
14	1.20 (30.6)	.99 (25.2)
16	1.37 (34.8)	1.16 (29.4)
18	1.54 (39.0)	1.32 (33.6)
20	1.70 (43.2)	1.49 (37.8)
22	1.87 (47.4)	1.65 (42.0)
24	2.03 (51.6)	1.82 (46.2)

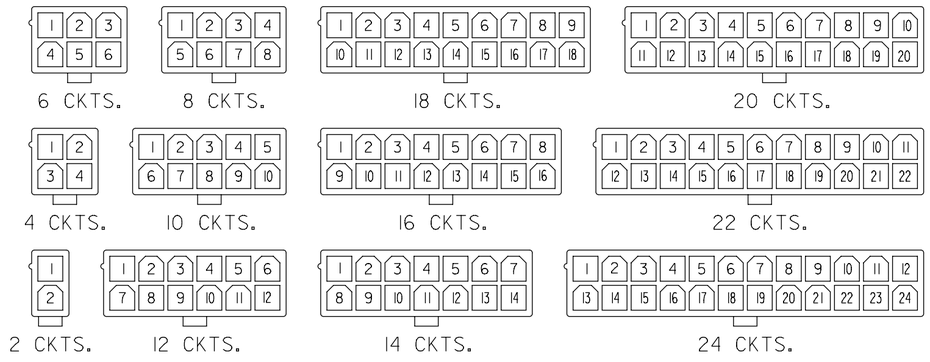

CIRCUIT SIZE LAYOUT

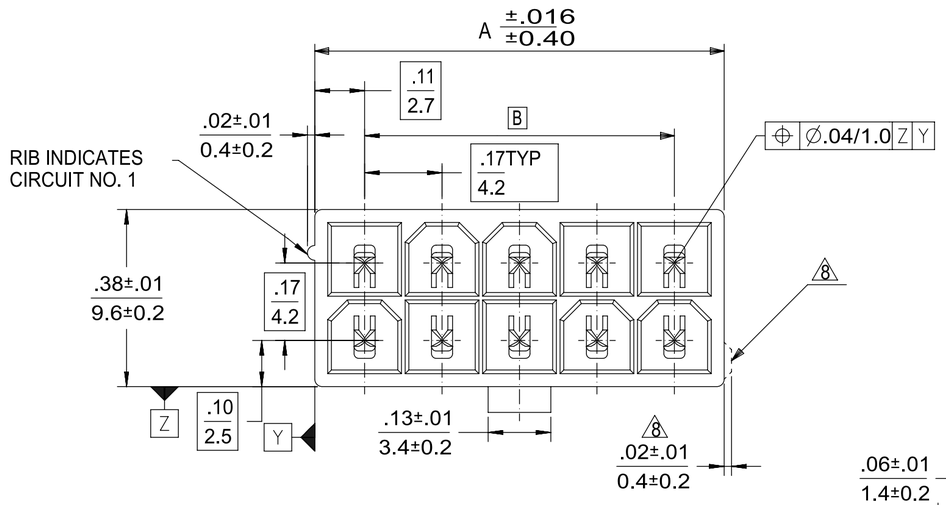

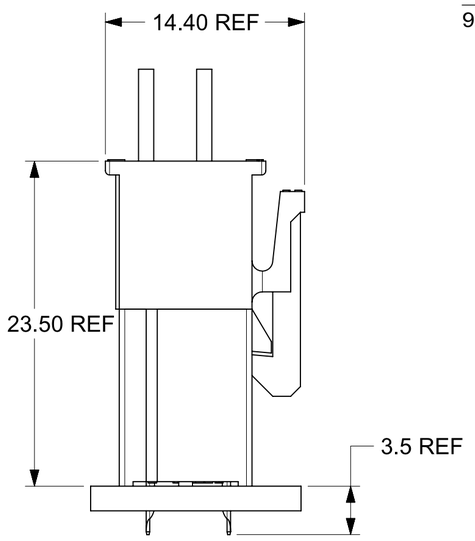

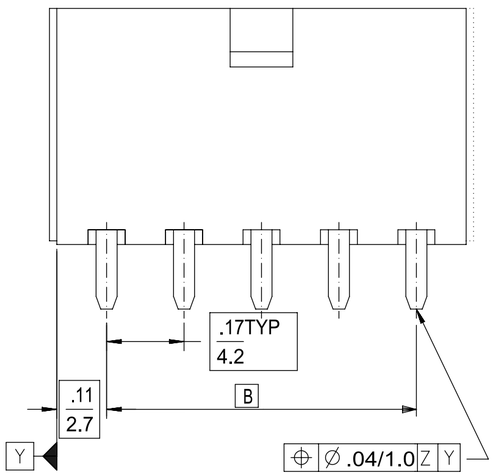

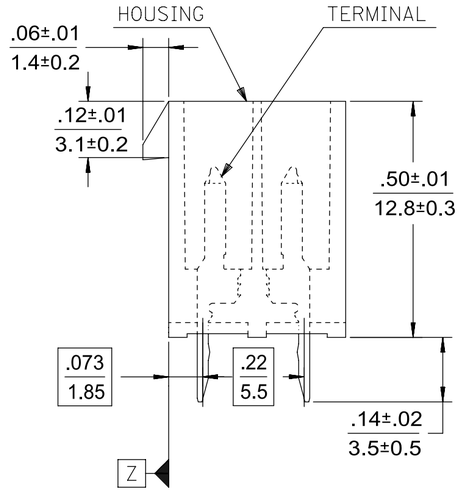

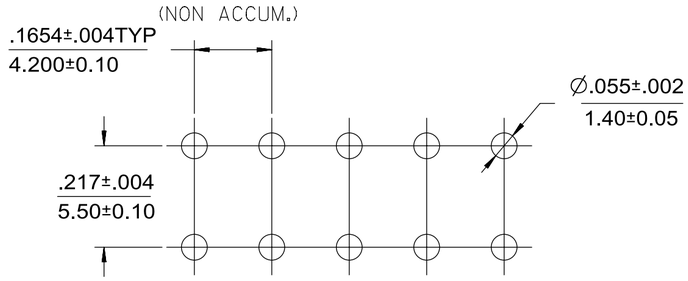

RECOMMENDED HOLE LAYOUT FOR
.070/(1.78) MAX. THICK P.C. BOARD
VIEWED FROM COMPONENT SIDE

NOTES:
1. MATERIALS:
   HOUSING:
   'BLANK'=NYLON 6/6, UL94V-2, COLOR: NATURAL
   "210" =NYLON 6/6, UL94V-0, COLOR: NATURAL
   "400"=NYLON 6/6, UL94V-0, COLOR: BLACK
   TERMINALS:
   "BLANK" = BRASS
   "PB" = PHOSPHER BRONZE
2. TERMINAL PLATING:
   "BLANK" = REFLOWED MATTE TIN .000035/(0.00090) MIN.
   OVER COPPER .000020/(0.00050) MIN. (BRASS) (PREPLATE)
   OR REFLOWED MATTE TIN .000035/(0.00090) MIN. (PHOSHOR BRONZE) (PREPLATE)
   (FINISH IS BRIGHT IN APPEARANCE, THICKNESS AS APPLIED PRIOR TO REFLOW)
   "S"=.000100/(0.00254) MIN. BRIGHT TIN OVER
   .000050/(0.00127) MIN NICKEL
   "MS"=.000100/(0.00254) MIN. MATTE TIN OVER
   .000050/(0.00127) MIN NICKEL
   "GS2"=.000015/(0.00038) MIN. SELECT GOLD AND
   .000100/(0.00254) MIN. SELECT MATTE TIN
   OVER .000050/(0.00127) MIN. NICKEL OVERALL
   "GS"=.000030/(0.00076) MIN. SELECT GOLD AND
   .000100/(0.00254) MIN. SELECT MATTE TIN
   OVER .000050/(0.00127) MIN. NICKEL OVERALL
3. PRODUCT SPECIFICATION: PS-5556-001
4. PACKAGING: "BLANK"= BULK PACKED,
   "TA"=TRAY PACK PER PK-5566-001, "TR"=TRAY PACK PER PK-5566
5. PART MATES WITH MINI-FIT JR. RECEPTACLE NO. 5557.
6. PART IS NOT DESIGNED FOR CURRENT SHARING.
7. PARTS ARE NOT DESIGNED TO BE MATED OR UN-MATED
   WHILE CIRCUITS ARE LIVE.
8. ANTI-SHINGLING RIB MAY OR MAY NOT APPEAR ON
   HOUSINGS.
9. PART CONFORMS TO CLASS "B" REQUIREMENTS OF
   COSMETIC SPECIFICATION PS-45499-002.
10. TEXT ON PART IS FOR REFERENCE ONLY. TEXT AND TEXT LOCATION MAY VARY
    DEPENDING ON PART NUMBER AND/OR TOOL.

LEGEND

5566 - N * * * - * - *

- BASE NUMBER
- CIRCUIT SIZE
- ASSEMBLY TYPE
  A - W/O DRAIN HOLES
  B - W/O DRAIN HOLES
  (B: NOT RECOMMENDED FOR NEW APPLICATION)
- TERMINAL MATERIAL (SEE NOTE 1)
- TERMINAL PLATING (SEE NOTE 2)
- HOUSING MATERIAL (SEE NOTE 1)
- COLOR OR PACKAGING
  BL: BLACK RE: RED GR: GRAY
  BU: BLUE YE: YELLOW GRE: GREEN
  V: VIOLET OR: ORANGE
  TA: TRAY PACKAGING SEE NOTE 4
  TR: TRAY PACKAGING SEE NOTE 4

THIS DRAWING CONTAINS INFORMATION THAT IS PROPRIETARY TO MOLEX ELECTRONIC TECHNOLOGIES, LLC AND SHOULD NOT BE USED WITHOUT WRITTEN PERMISSION

DIMENSION UNITS	SCALE
mm	NTS

GENERAL TOLERANCES (UNLESS SPECIFIED)

	MM	INCH
4 PLACES	±	±
3 PLACES	±	± 0.0050
2 PLACES	± 0.380	± 0.010
1 PLACE	± 0.50	±
0 PLACES	±	±
ANGULAR TOL	± 3°	

DRAFT WHERE APPLICABLE MUST REMAIN WITHIN DIMENSIONS

CURRENT REV DESC: ADD THE VIEW OF MATING HEIGHT

STATUS: Production
DRWN: Xiao Wei Wang 2026-06-25
CHK'D: Xiao Wei Wang 2026-06-29
APPR: Xue Qing Zhang 2026-06-29

INITIAL REVISION:
DRWN: H.HIRAMOTO 1989/04/03
APPR: FSMITH 2012/05/04

THIRD ANGLE PROJECTION | DRAWING: C-SIZE | SERIES: 5566

molex

MINI FIT JR VERTICAL
HEADER ASSEMBLIES WITHOUT PEGS

PRODUCT CUSTOMER DRAWING

DOCUMENT NUMBER	DOC TYPE	DOC PART	REVISION
SD-5566-002	PSD	000	N1

MATERIAL NUMBER	CUSTOMER	SHEET NUMBER
SEE TABLE	GENERAL MARKET	1 OF 5

FORMAT: EngMgr-TC4Sv-prod-C
REVISION: B
DATE: 2023/10/23

		39-30-9245	5566-24AGS2-210	39-29-6248	5566-24AGS-210			39-28-8240	5566-24A-210	24
		39-30-9225	5566-22AGS2-210	39-29-6228	5566-22AGS-210			39-28-8220	-22A-210	22
		39-30-9205	5566-20AGS2-210	39-29-6208	5566-20AGS-210			39-28-8200	-20A-210	20
		39-30-9185	5566-18AGS2-210	39-29-6188	5566-18AGS-210			39-28-8180	-18A-210	18
		39-30-9165	5566-16AGS2-210	39-29-6168	5566-16AGS-210	39-30-6162	5566-16AS-210	39-28-8160	-16A-210	16
		39-30-9145	5566-14AGS2-210	39-29-6148	5566-14AGS-210			39-28-8140	-14A-210	14
		39-30-9125	5566-12AGS2-210	39-29-6128	5566-12AGS-210			39-28-8120	-12A-210	12
		39-30-9105	5566-10AGS2-210	39-29-6108	5566-10AGS-210			39-28-8100	-10A-210	10
		39-30-9085	5566-08AGS2-210	39-29-6088	5566-08AGS-210	39-30-6082	5566-08AS-210	39-28-8080	-08A-210	8
		39-30-9065	5566-06AGS2-210	39-29-6068	5566-06AGS-210	39-30-6062	5566-06AS-210	39-28-8060	-06A-210	6
		39-30-9045	5566-04AGS2-210	39-29-6048	5566-04AGS-210	39-30-6042	5566-04AS-210	39-28-8040	-04A-210	4
		39-30-9025	5566-02AGS2-210	39-29-6028	5566-02AGS-210			39-28-8020	5566-02A-210	2
EDP NO.	ENG. NO.	EDP NO.	ENG. NO.	EDP NO.	ENG. NO.	EDP NO.	ENG. NO.	EDP NO.	ENG. NO.	CKT. SIZE
5566-NAPB-210		5566-NAGS2-210		5566-NAGS-210		5566-NAS-210		5566-NA-210		
		39-30-9244	5566-24AGS2	39-29-0243	5566-24AGS			39-28-1243	5566-24A	24
		39-30-9224	5566-22AGS2					39-28-1223	5566-22A	22
		39-30-9204	5566-20AGS2	39-29-0203	5566-20AGS			39-28-1203	5566-20A	20
		39-30-9184	5566-18AGS2	39-29-0183	5566-18AGS			39-28-1183	5566-18A	18
		39-30-9164	5566-16AGS2					39-28-1163	5566-16A	16
		39-30-9144	5566-14AGS2					39-28-1143	5566-14A	14
		39-30-9124	5566-12AGS2	39-29-0123	5566-12AGS			39-28-1123	5566-12A	12
		39-30-9104	5566-10AGS2	39-29-0103	5566-10AGS	39-30-6101	5566-10AS	39-28-1103	5566-10A	10
		39-30-9084	5566-08AGS2	39-29-0083	5566-08AGS		5566-08AS	39-28-1083	5566-08A	8
		39-30-9064	5566-06AGS2	39-29-0063	5566-06AGS			39-28-1063	5566-06A	6
		39-30-9044	5566-04AGS2	39-29-0043	5566-04AGS			39-28-1043	5566-04A	4
		39-30-9024	5566-02AGS2	39-29-0023	5566-02AGS			39-28-1023	5566-02A	2
EDP NO.	ENG. NO.	EDP NO.	ENG. NO.	EDP NO.	ENG. NO.	EDP NO.	ENG. NO.	EDP NO.	ENG. NO.	CKT. SIZE
5566-NAPB		5566-NAGS2		5566-NAGS		5566-NAS		5566-NA		

PARTS WITHOUT DRAIN HOLES

THIS DRAWING CONTAINS INFORMATION THAT IS PROPRIETARY TO MOLEX ELECTRONIC TECHNOLOGIES, LLC AND SHOULD NOT BE USED WITHOUT WRITTEN PERMISSION

DIMENSION UNITS	SCALE
mm	NTS

GENERAL TOLERANCES (UNLESS SPECIFIED)

	MM	INCH
4 PLACES	±	±
3 PLACES	±	± 0.0050
2 PLACES	± 0.380	± 0.010
1 PLACE	± 0.50	±
0 PLACES	±	±
ANGULAR TOL	± 3°	

DRAFT WHERE APPLICABLE MUST REMAIN WITHIN DIMENSIONS

CURRENT REV DESC: ADD THE VIEW OF MATING HEIGHT

STATUS: Production

DRWN: Xiao Wei Wang 2026-06-25

CHK'D: Xiao Wei Wang 2026-06-29

APPR: Xue Qing Zhang 2026-06-29

INITIAL REVISION:

DRWN: H.HIRAMOTO 1989/04/03

APPR: FSMITH 2012/05/04

molex

MINI FIT JR VERTICAL
HEADER ASSEMBLIES WITHOUT PEGS

PRODUCT CUSTOMER DRAWING

DOCUMENT NUMBER	DOC TYPE	DOC PART	REVISION
SD-5566-002	PSD	000	N1

THIRD ANGLE PROJECTION	DRAWING	SERIES	MATERIAL NUMBER	CUSTOMER	SHEET NUMBER
	C-SIZE	5566	SEE TABLE	GENERAL MARKET	2 OF 5

FORMAT: EngMgr-TC4b+prod-C
REVISION: B
DATE: 2023/10/23

						24
						22
						20
						18
		39-31-0168	5566-16BGS-210	39-31-0160	5566-16B-210	16
		39-31-0148	5566-14BGS-210	39-31-0140	5566-14B-210	14
		39-31-0128	5566-12BGS-210	39-31-0120	5566-12B-210	12
		39-31-0108	5566-10BGS-210	39-31-0100	5566-10B-210	10
		39-31-0088	5566-08BGS-210	39-31-0080	5566-08B-210	8
		39-31-0068	5566-06BGS-210	39-31-0060	5566-06B-210	6
		39-31-0048	5566-04BGS-210	39-31-0040	5566-04B-210	4
		39-31-0028	5566-02BGS-210	39-31-0020	5566-02B-210	2
		EDP NO.	ENG. NO.	EDP NO.	ENG. NO.	CKT. SIZE
		5566-NBGS-210		5566-NB-210		

						24
						22
		39-31-0207	5566-20BGS	39-29-3206	5566-20B	20
						18
		39-31-0167	5566-16BGS	39-29-3166	5566-16B	16
		39-31-0147	5566-14BGS	39-29-3146	5566-14B	14
				39-29-3126	5566-12B	12
		39-31-0107	5566-10BGS	39-29-3106	5566-10B	10
		39-31-0087	5566-08BGS	39-29-3086	5566-08B	8
		39-31-0067	5566-06BGS	39-29-3066	5566-06B	6
39-30-9046	**5566-04BGS2**	39-31-0047	5566-04BGS	39-29-3046	5566-04B	4
		39-31-0027	5566-02BGS	39-29-3026	5566-02B	2
EDP NO.	ENG. NO.	EDP NO.	ENG. NO.	EDP NO.	ENG. NO.	CKT. SIZE
5566-NBGS2		5566-NBGS		5566-NB		

PARTS WITHOUT DRAIN HOLES

PART NUMBERS IN THIS SHEET ARE NOT RECOMMENDED FOR NEW APPLICATION.
ALL WITH DRAIN HOLE VERSION PRODUCTS ARE CHANGED TO WITHOUT DRAIN HOLE VERSION PRODUCTS.

THIS DRAWING CONTAINS INFORMATION THAT IS PROPRIETARY TO MOLEX ELECTRONIC TECHNOLOGIES, LLC AND SHOULD NOT BE USED WITHOUT WRITTEN PERMISSION

DIMENSION UNITS	SCALE
mm	NTS

GENERAL TOLERANCES (UNLESS SPECIFIED)

	MM	INCH
4 PLACES	±	±
3 PLACES	±	± 0.0050
2 PLACES	± 0.380	± 0.010
1 PLACE	± 0.50	±
0 PLACES	±	±
ANGULAR TOL	± 3°	

DRAFT WHERE APPLICABLE MUST REMAIN WITHIN DIMENSIONS

CURRENT REV DESC: ADD THE VIEW OF MATING HEIGHT

STATUS: Production
DRWN: Xiao Wei Wang 2026-06-25
CHK'D: Xiao Wei Wang 2026-06-29
APPR: Xue Qing Zhang 2026-06-29

INITIAL REVISION:
DRWN: H.HIRAMOTO 1989/04/03
APPR: FSMITH 2012/05/04

THIRD ANGLE PROJECTION | DRAWING: C-SIZE | SERIES: 5566

molex

MINI FIT JR VERTICAL
HEADER ASSEMBLIES WITHOUT PEGS

PRODUCT CUSTOMER DRAWING

DOCUMENT NUMBER	DOC TYPE	DOC PART	REVISION
SD-5566-002	PSD	000	N1

MATERIAL NUMBER	CUSTOMER	SHEET NUMBER
SEE TABLE	GENERAL MARKET	3 OF 5

FORMAT: EngMgr-TC4b+prod-C
REVISION: B
DATE: 2023/10/23

COLORED PART NUMBERS
PARTS WITHOUT DRAIN HOLES

												24
												22
												20
						46999-0085	5566-18AS-RE					18
												16
												14
												12
										46999-0087	5566-10AS-V	10
								46999-0089	5566-08AS-OR			8
												6
												4
												2
						EDP. NO.	ENG. NO.	EDP. NO.	ENG. NO.	EDP. NO.	ENG. NO.	CKT. SIZE
						5566-NAS-RE		5566-NAS-OR		5566-NAS-V		
TRAY PACKED PER TA 4	46999-0575	5566-24AMS-400	TRAY PACKED PER TA 4									24
	46999-0574	5566-22AMS-400										22
	46999-0573	5566-20AMS-400										20
	46999-0572	5566-18AMS-400										18
	46999-0571	5566-16AMS-400										16
	46999-0570	5566-14AMS-400										14
	46999-0569	5566-12AMS-400										12
	46999-0568	5566-10AMS-400		46999-0876	5566-10AMS-RE							10
	46999-0567	5566-08AMS-400				46999-0091	5566-08AS-GRE					8
	46999-0566	5566-06AMS-400										6
	46999-0565	5566-04AMS-400										4
	46999-0564	5566-02AMS-400				50-36-2485	5566-02AS-GRE	39-34-5023	5566-02A-210-YE			2
	EDP. NO.	ENG. NO.		EDP. NO.	ENG. NO.	EDP. NO.	ENG. NO.	EDP. NO.	ENG. NO.	EDP. NO.	ENG. NO.	CKT. SIZE
	5566-NAMS-400			5566-NAMS-RE		5566-NAS-GRE		5566-NA-210-YE		5566-NA-400		
												24
												22
												20
												18
												16
												14
												12
												10
												8
												6
										39-33-3043	5566-04A-BL	4
								39-33-3024	5566-02A-BU	39-33-3023	5566-02A-BL	2
	EDP. NO.	ENG. NO.		EDP. NO.	ENG. NO.	EDP. NO.	ENG. NO.	EDP. NO.	ENG. NO.	EDP. NO.	ENG. NO.	CKT. SIZE
	5566-NA-GR			5566-NA-YE		5566-NA-RE		5566-NA-BU		5566-NA-BL		

THIS DRAWING CONTAINS INFORMATION THAT IS PROPRIETARY TO MOLEX ELECTRONIC TECHNOLOGIES, LLC AND SHOULD NOT BE USED WITHOUT WRITTEN PERMISSION

DIMENSION UNITS	SCALE
mm	NTS

GENERAL TOLERANCES (UNLESS SPECIFIED)

	MM	INCH
4 PLACES	±	±
3 PLACES	±	± 0.0050
2 PLACES	± 0.380	± 0.010
1 PLACE	± 0.50	±
0 PLACES	±	±
ANGULAR TOL	± 3°	

DRAFT WHERE APPLICABLE MUST REMAIN WITHIN DIMENSIONS

CURRENT REV DESC: ADD THE VIEW OF MATING HEIGHT

STATUS: Production
DRWN: Xiao Wei Wang 2026-06-25
CHK'D: Xiao Wei Wang 2026-06-29
APPR: Xue Qing Zhang 2026-06-29

INITIAL REVISION:
DRWN: H.HIRAMOTO 1989/04/03
APPR: FSMITH 2012/05/04

THIRD ANGLE PROJECTION

DRAWING: C-SIZE
SERIES: 5566

molex

MINI FIT JR VERTICAL
HEADER ASSEMBLIES WITHOUT PEGS

PRODUCT CUSTOMER DRAWING

DOCUMENT NUMBER	DOC TYPE	DOC PART	REVISION
SD-5566-002	PSD	000	N1

MATERIAL NUMBER	CUSTOMER	SHEET NUMBER
SEE TABLE	GENERAL MARKET	4 OF 5

FORMAT: Engelega-TC-tb-prod-C
REVISION: B
DATE: 2023/10/23

TRAY PACKED PART NUMBERS

PARTS WITHOUT DRAIN HOLES

TRAY PACKED PER TA 4			TRAY PACKED PER TA 4			
	46999-0137	5566-24AMS		46999-0149	5566-24AMS-210	24
	46999-0136	5566-22AMS		46999-0148	5566-22AMS-210	22
	46999-0135	5566-20AMS		46999-0147	5566-20AMS-210	20
	46999-0134	5566-18AMS		46999-0146	5566-18AMS-210	18
	46999-0133	5566-16AMS		46999-0145	5566-16AMS-210	16
	46999-0132	5566-14AMS		46999-0144	5566-14AMS-210	14
	46999-0131	5566-12AMS		46999-0143	5566-12AMS-210	12
	46999-0130	5566-10AMS		46999-0142	5566-10AMS-210	10
	46999-0129	5566-08AMS		46999-0141	5566-08AMS-210	8
	46999-0128	5566-06AMS		46999-0140	5566-06AMS-210	6
	46999-0127	5566-04AMS		46999-0139	5566-04AMS-210	4
	46999-0126	5566-02AMS		46999-0138	5566-02AMS-210	2
	EDP. NO.	ENG. NO.		EDP. NO.	ENG. NO.	CKT. SIZE
	5566-NAMS			5566-NAMS-210		

				24
				22
				20
		39-53 -9188	5566 -18A-TA	18
				16
				14
				12
				10
				8
46999-0630	5566-06AGS2-BL-TA			6
46999-0629	5566-04AGS2-BL-TA			4
				2
EDP NO.	ENG. NO.	EDP NO.	ENG. NO.	CKT. SIZE
5566-NAGS2-BL-TA		5566-NA-TA		

THIS DRAWING CONTAINS INFORMATION THAT IS PROPRIETARY TO MOLEX ELECTRONIC TECHNOLOGIES, LLC AND SHOULD NOT BE USED WITHOUT WRITTEN PERMISSION

DIMENSION UNITS: mm | SCALE: NTS

GENERAL TOLERANCES (UNLESS SPECIFIED)

	MM	INCH
4 PLACES	±	±
3 PLACES	±	± 0.0050
2 PLACES	± 0.380	± 0.010
1 PLACE	± 0.50	±
0 PLACES	±	±
ANGULAR TOL	± 3°	

DRAFT WHERE APPLICABLE MUST REMAIN WITHIN DIMENSIONS

CURRENT REV DESC: ADD THE VIEW OF MATING HEIGHT

STATUS: Production
DRWN: Xiao Wei Wang 2026-06-25
CHK'D: Xiao Wei Wang 2026-06-29
APPR: Xue Qing Zhang 2026-06-29

INITIAL REVISION:
DRWN: H.HIRAMOTO 1989/04/03
APPR: FSMITH 2012/05/04

THIRD ANGLE PROJECTION | DRAWING: C-SIZE | SERIES: 5566

molex

MINI FIT JR VERTICAL
HEADER ASSEMBLIES WITHOUT PEGS

PRODUCT CUSTOMER DRAWING

DOCUMENT NUMBER	DOC TYPE	DOC PART	REVISION
SD-5566-002	PSD	000	N1

MATERIAL NUMBER	CUSTOMER	SHEET NUMBER
SEE TABLE	GENERAL MARKET	5 OF 5

FORMAT: Eng4ega-TC4b-prod-C
REVISION: B
DATE: 2023/10/23