DATA SHEET

SKY85402-11: High-Power (+22 dBm) 802.11ac WLAN Power Amplifier with Integrated Power Detector

Applications

- IEEE 802.11ac WLAN enabled:
  - Access points
  - Media gateways
  - Set-top boxes
  - LCD TVs
- Other broadband triple-play multimedia applications

Features

- Linear output power for IEEE 802.11ac 256-QAM, EVM < 1.8% = +22 dBm @ 5.0 V
- High gain: 32 dB
- Power shutdown mode
- Superior gain flatness
- Fully matched at RF input/output ports
- Load insensitive power detector
- Small footprint QFN (20-pin, 4 x 4 mm) SMT package (MSL3, 260 °C per JEDEC J-STD-020)

Skyworks Green™ products are compliant with all applicable legislation and are halogen-free. For additional information, refer to *Skyworks Definition of Green™*, document number SQ04–0074.

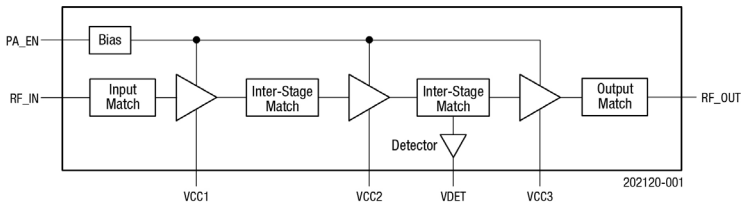

Figure 1. SKY85402-11 Block Diagram

Description

Skyworks SKY85402-11 is a 5 GHz Microwave Monolithic Integrated Circuit (MMIC) power amplifier (PA) with superior output power, linearity, and efficiency. These features make the SKY85402-11 ideal for wireless local area network (WLAN IEEE 802.11ac) applications.

The device is fabricated using SiGe BiCMOS technology. The device is internally matched and mounted in a 20-pin, 4 x 4 mm Quad Flat No-Lead (QFN) surface-mount technology (SMT) package, which allows for a highly manufacturable low cost solution.

A block diagram of the SKY85402-11 is shown in Figure 1. The device package and pinout are shown in Figure 2. Signal pin assignments and functional pin descriptions are described in Table 1.

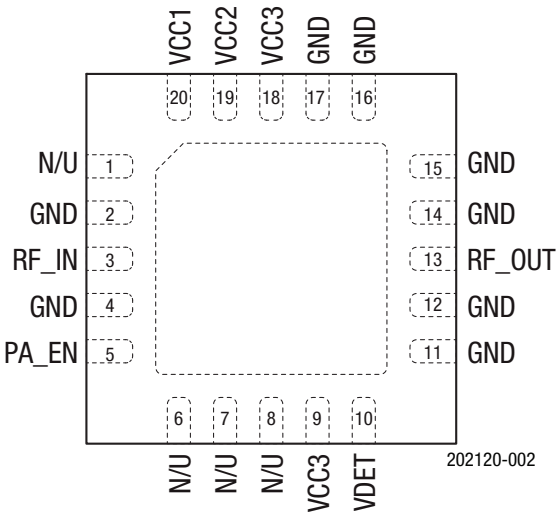

Figure 2. SKY85402-11 Pinout
(Top View)

Table 1. SKY85402-11 Signal Descriptions

Pin	Name	Description	Pin	Name	Description
1	N/U	Not used; open circuit	11	GND	Ground
2	GND	Ground	12	GND	Ground
3	RF_IN	RF input	13	RF_OUT	Power amplifier RF output
4	GND	Ground	14	GND	Ground
5	PA_EN	PA enable	15	GND	Ground
6	N/U	Not used; open circuit	16	GND	Ground
7	N/U	Not used; open circuit	17	GND	Ground
8	N/U	Not used; open circuit	18	VCC3	Third stage supply voltage
9	VCC3	Third stage supply voltage	19	VCC2	Second stage supply voltage
10	VDET	Analog power detector output	20	VCC1	First stage supply voltage

Technical Description

The SKY85402-11 PA contains all of the needed RF matching and DC biasing circuits. The device also provides an output power detector voltage.

The SKY85402-11 is a three-stage, SiGe BiCMOS device optimized for high linearity and power efficiency. These features make the device suitable for wideband digital applications, where PA linearity and power consumption are of critical importance (for example, WiFi systems or WLANs).

The device has been characterized with the highest specified data rates for IEEE802.11ac (256 QAM). Under these stringent test conditions, the device exhibits excellent spectral purity and power efficiency.

Electrical and Mechanical Specifications

The absolute maximum ratings of the SKY85402-11 are provided in Table 2. Recommended operating conditions are specified in Table 3. Electrical specifications are provided in Tables 4, 5, and 6.

Table 2. SKY85402-11 Absolute Maximum Ratings[1]

Parameter	Symbol	Minimum	Maximum	Units
Supply voltage	VCC1, VCC2, VCC3	-0.3	+5.5	V
Enable voltage	PA_EN	-0.3	+3.6	V
RF input power	P_{IN}		+12	dBm
Operating temperature	T_{OP}	-40	+85	°C
Storage temperature	T_{ST}	-40	+150	°C
Junction temperature	T_J		+160	°C
Thermal resistance	Θ_{JC}		14.9	°C/W
Electrostatic discharge: Human Body Model (HBM), Class 1C			1000	V

1 Exposure to maximum rating conditions for extended periods may reduce device reliability. There is no damage to device with only one parameter set at the limit and all other parameters set at or below their nominal value. Exceeding any of the limits listed here may result in permanent damage to the device.

***ESD HANDLING**: Although this device is designed to be as robust as possible, electrostatic discharge (ESD) can damage this device. This device must be protected at all times from ESD when handling or transporting. Static charges may easily produce potentials of several kilovolts on the human body or equipment, which can discharge without detection. Industry-standard ESD handling precautions should be used at all times.*

Table 3. SKY85402-11 Recommended Operating Conditions

Parameter	Symbol	Min	Typ	Max	Units
Supply voltage	VCC1, VCC2, VCC3	3.0	5.00	5.25	V
Enable voltage	PA_EN	1.8		3.6	V
Case operating temperature	T_{OP}	-40	+25	+85	°C

Table 4. SKY85402-11 Electrical Specifications: DC Characteristics[1]
(VCC1 = VCC2 = VCC3 = 5.0 V, PA_EN = 3.3 V, T_{OP} = +25 °C as Measured on the Evaluation Board, Unless Otherwise Noted)

Parameter	Symbol	Test Condition	Min	Typ	Max	Units
Supply current	I_{CC}	802.11ac: P_{OUT} = +22 dBm, MCS9, 5 V P_{OUT} = +25 dBm, MCS7, 5 V PA_EN = 0 V, No RF		 450 560 20	 495 615 100	 mA mA µA
Quiescent current	I_{CQ}	No RF		335		mA
Enable voltage: High Low	 $PAEN_H$ $PAEN_L$		 1.8 0		 3.6 0.5	 V V
Enable current	I_{EN}			150	200	µA

1 Performance is guaranteed only under the conditions listed in this table.

Table 5. SKY85402-11 Electrical Specifications: General[1]
(VCC1 = VCC2 = VCC3 = 5.0 V, PA_EN = 3.3 V, TOP = +25 °C, Unless Otherwise Noted)

Parameter	Symbol	Test Condition	Min	Typ	Max	Units
Frequency range	f		5.15		5.85	GHz
Output power	POUT	802.11ac, MCS9, -35 dB DEVM, HT80, 5 V	+20.5	+22		dBm
		802.11n, MCS7, -30 dB DEVM, HT40, 5 V	+23	+25		dBm
		MCS0, 5 V, HT20, mask compliant	+26	+27.5		dBm
1 dB output compression point	OP1dB	PIN = CW	+28	+29		dBm
Small signal gain	|S21|		30	32	36	dB
Input return loss	|S11|		8	14		dB
Gain variation over band	Δ S21			±1.5		dB
2nd and 3rd harmonics	2fo, 3fo	POUT = +23 dBm		-50	-45	dBm/MHz
Rise and fall time	tR, tF			0.5		µs
Stability		POUT = +28 dBm, VSWR = 6:1, all phases	All non-harmonically related outputs < -50 dBm/MHz			-
Ruggedness	Ru	PIN = +10 dBm, VSWR = 6:1, all phases	No damage			-

1 Performance is guaranteed only under the conditions listed in this table.

Table 6. SKY85402-11 Electrical Specifications: Power Detector Characteristics[1]
(VCC = 5.0 V, PA_EN = 3.3 V, TOP = +25 °C, f = 5.4 GHz, Unless Otherwise Noted)

Parameter	Symbol	Test Condition	Min	Typ	Max	Units
Output power detector range	PDR		0		OP1dB	dBm
Detector voltage	VDET	POUT = +28 dBm		0.85		V
		POUT = +25 dBm		0.65		V
		POUT = No RF		0.30		V
Detector accuracy	ERRDET	ΔPOUT @ constant VDET, +25 dBm:				
		5.15 GHz to 5.32 GHz. 0.65 V	-0.5		+0.5	dB
		5.32 GHz to 5.70 GHz, 0.66 V	-0.5		+0.5	dB
		5.70 GHz to 5.85 GHz, 0.88 V	-0.5		+0.5	dB
		Detection variation at VSWR = 3:1		±1.5		dB
Output impedance	PDZOUT			2		kΩ
DC load impedance	PDZLOAD			26.5		kΩ

1 Performance is guaranteed only under the conditions listed in this table.

Evaluation Board Description

The SKY85402-11 Evaluation Board is used to test the performance of the SKY85402-11 WLAN PA. A schematic diagram of the SKY85402-11 Evaluation Board is shown in Figure 3. A photograph of the Evaluation Board is shown in Figure 4. Component values for the SKY85402-11 Evaluation Board are listed in Table 7.

Evaluation Board Setup Procedure

1. Connect system ground to pin 2 of connector J6.
2. Apply 5.0 V to pin 7 of connector J6.
3. By applying 3.3 V on PA_EN (pin 6 of the J5 header), the PA is enabled. By placing a ground on PA_EN, the PA is disabled and placed in a shutdown state, drawing minimal current.
4. The 5 GHz amplifier performance can be monitored by applying an RF signal to connector J2 (RF_IN). Monitor the output power on the RF_OUT port connector, J1.
5. Detector performance can be monitored on pin 4 of connector J5.

CAUTION: *Do not overdrive the amplifier by applying too much RF on the device input. A suitable starting input power setting is -20 dBm.*

Circuit Design Considerations

The following design considerations are general in nature and must be followed regardless of final use or configuration:

- Paths to ground should be made as short as possible.
- The ground pad of the SKY85402-11 has special electrical and thermal grounding requirements. This pad is the main thermal conduit for heat dissipation. Since the circuit board acts as the heat sink, it must shunt as much heat as possible from the device.

  Therefore, design the connection to the ground pad to dissipate the maximum wattage produced by the circuit board. Multiple vias to the grounding layer are required. For further information, refer to the Skyworks Application Note *PCB Design Guidelines for High Power Dissipation Packages*, document number 201211.
- Bypass capacitors should be used on the DC supply lines. Refer to the schematic drawing in Figure 10 for further details.
- The RF lines should be well separated from each other with solid ground in between traces to maximize input-to-output isolation.
- The RF_IN and RF_OUT ports are DC short to ground. These ports need to be DC blocked with general purpose 10 pF capacitors if there is DC present on the traces connecting to the ports.
- The RF_IN and RF_OUT trace losses measured from device pin to SMA connector are 0.2 dB each.

NOTE: *A poor connection between the ground pad and ground increases junction temperature (T_J), which reduces the life of the device.*

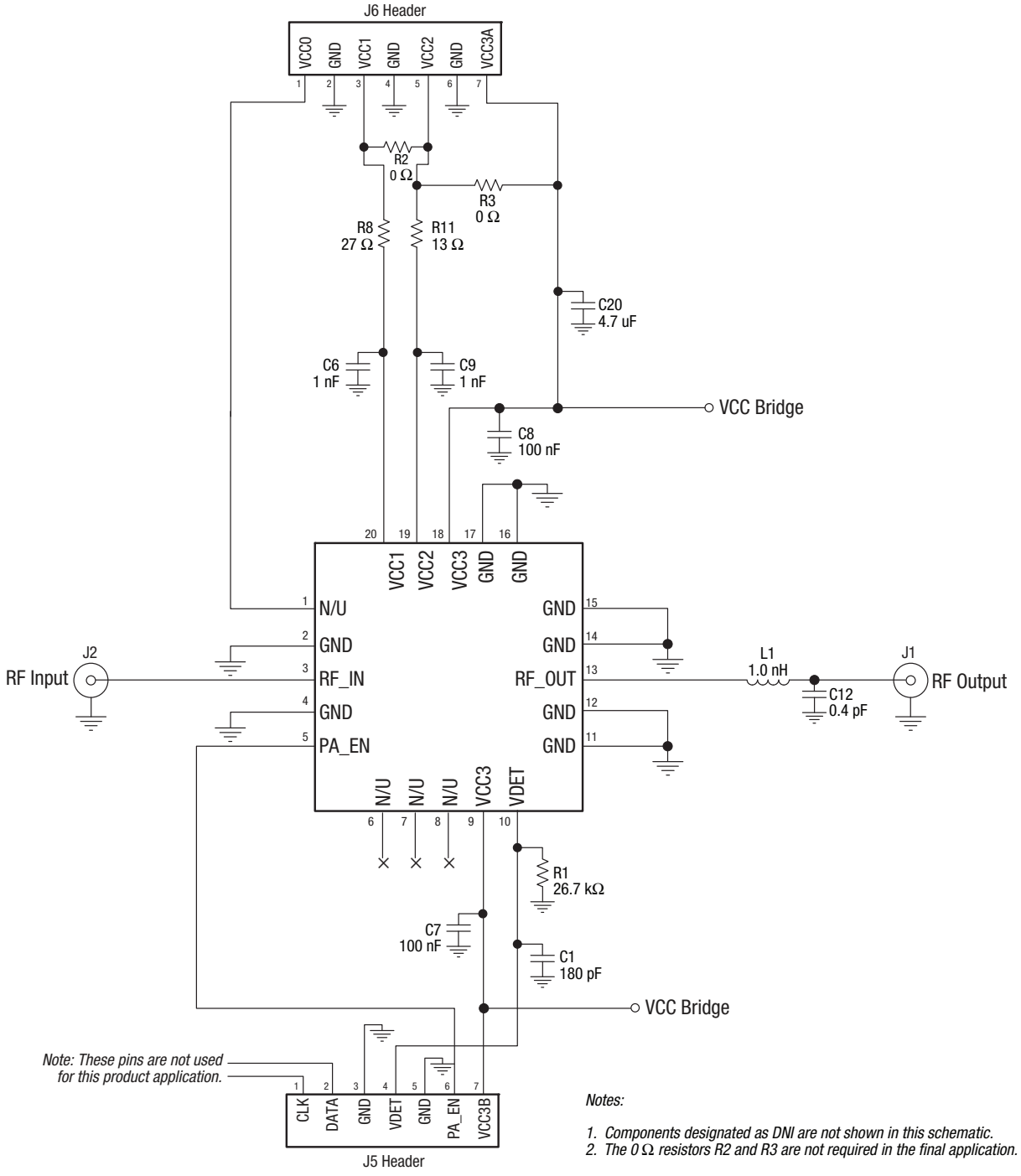

Figure 3. SKY85402-11 Evaluation Board Schematic

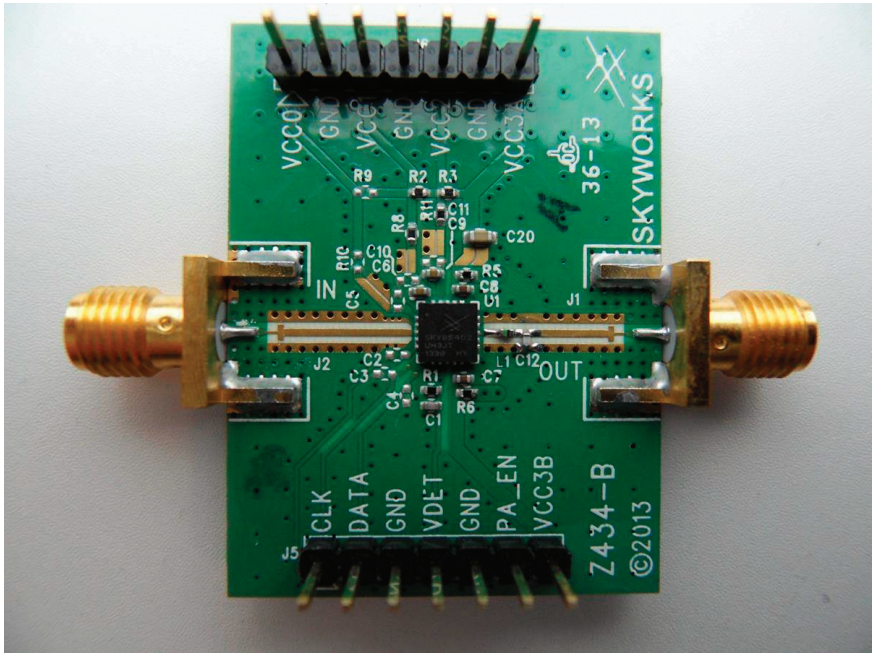

202120-011

Figure 4. SKY85402-11 Evaluation Board

Table 7. SKY85402-11 Evaluation Board Bill of Materials

Component	Size	Value	Vendor	Mfr Part Number	Comments
C1	0402	180 pF	Murata	GRM1555C1H181JA01	Multilayer ceramic
C6, C9	0402	1 nF	Murata	GRM1555C1H102JA01	Multilayer ceramic
C7, C8	0402	100 nF	Murata	GRM155R71C104KA88D	Multilayer ceramic
C12	0402	0.4 pF	Murata	GJM1555C1HR40BB01	RF, High Q, Low Loss
C20	0603	4.7 uF	Murata	GRM188R60J475KE19	Multilayer ceramic
J1, J2	End launch	SMA	Johnson Components	142-0701-851	SMA end launch straight jack receptacle - tab contact
J5, J6	100 mil	7X1	Samtec	TSW-107-07-G-S	100 mil header
L1	0402	1.0 nH	Murata	LQG15HN1N0S02	High frequency multilayer
PCB1		Z434-B	Skyworks Solutions Inc.	Z434-B	PCB
R1	0402	26.7 kΩ	Panasonic	ERJ2RKF2672	Thick film chip resistor
R2, R3, R5, R6	0402	0 Ω	Panasonic	ERJ2GEJ0R0	Thick film chip resistor
R8	0402	27 Ω	Panasonic	ERJ2GEJ270	Thick film chip resistor
R11	0402	13 Ω	Panasonic	ERJ2GEJ13R0	Thick film chip resistor
U1	QFN 400 X 400	SKY85402-11	Skyworks Solutions Inc.	SKY85402	802.11ac +22dBm PA

Package Dimensions

The PCB layout footprint for the SKY85402-11 is provided in Figure 5. Typical part markings are shown in Figure 6. Package dimensions are shown in Figure 7, and tape and reel dimensions are provided in Figure 8.

Package and Handling Information

Since the device package is sensitive to moisture absorption, it is baked and vacuum packed before shipping. Instructions on the shipping container label regarding exposure to moisture after the container seal is broken must be followed. Otherwise, problems related to moisture absorption may occur when the part is subjected to high temperature during solder assembly.

The SKY85402-11 is rated to Moisture Sensitivity Level 3 (MSL3) at 260 °C. It can be used for lead or lead-free soldering. For additional information, refer to the Skyworks Application Note, *Solder Reflow Information*, document number 200164.

Care must be taken when attaching this product, whether it is done manually or in a production solder reflow environment. Production quantities of this product are shipped in a standard tape and reel format.

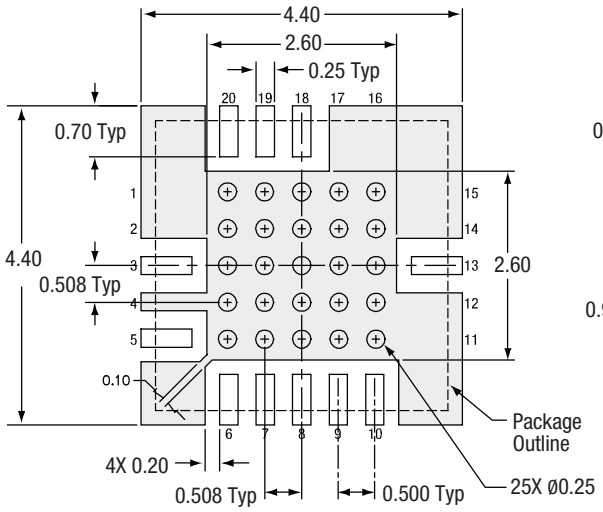

Board Metal and Via Pattern
Top View (Note 4)

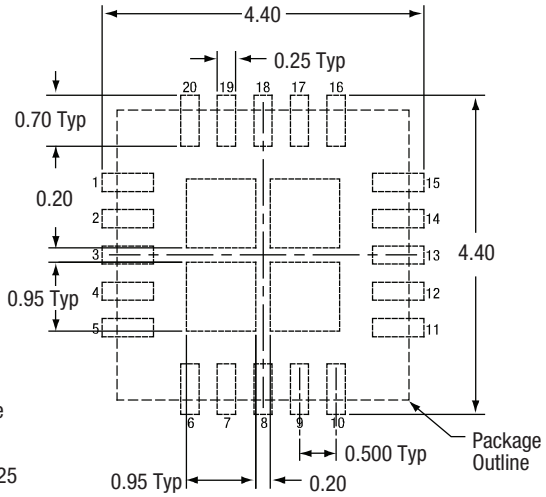

Stencil Aperture
Top View (Note 5)
63% Solder Coverage
On Center Pads

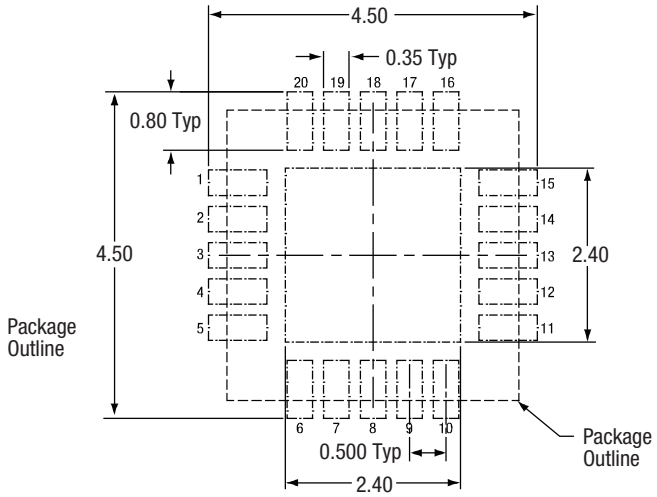

Solder Mask Opening
Top View (Note 6)

Notes:

1. All dimensions are in millimeters.
2. Dimensions and tolerances in accordance with ASME Y14.5–1994.
3. Unless specified, dimensions are symmetrical about center lines.
4. Via hole recommendations: 30 to 35 µm Cu via wall plating. Via holes should be tented with solder mask on the backside and filled with solder.
5. Stencil recommendations: 0.125 mm stencil thickness, laser cut apertures, trapezoidal walls, and rounded corners offer better paste release.
6. Solder mask recommendations: Contact board fabricator for recommended solder mask offset and tolerance.

202120-012

Figure 5. PCB Layout Footprint for the SKY85402-11

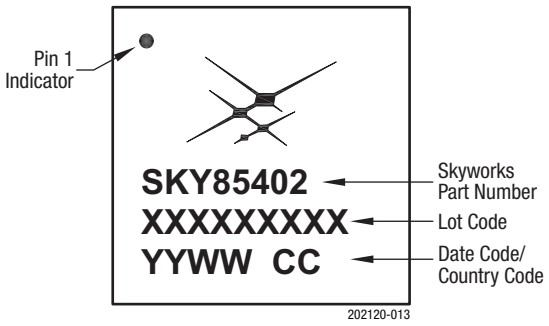

Figure 6. Typical Part Markings (Top View)

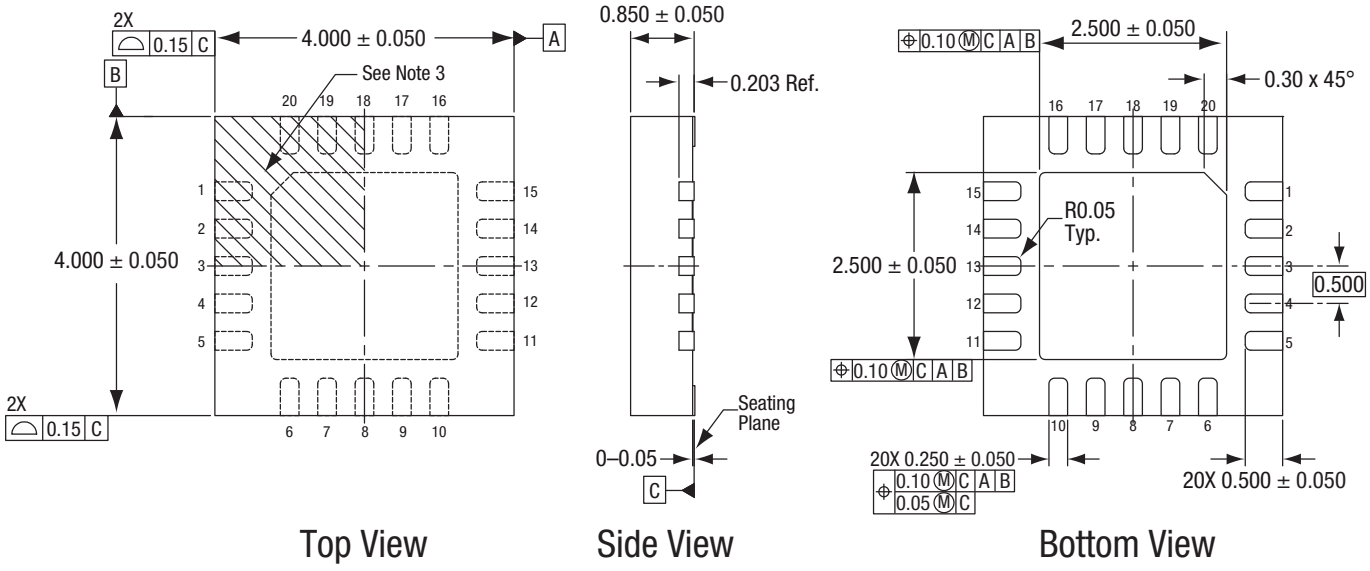

Notes:

1. *All measurements are in millimeters.*
2. *Dimensions and tolerances according to ASME Y14.5M-1994.*
   Unless otherwise specified the following values apply:
   Decimal Tolerance: *Angular Tolerance:*
   X.X (1 place) ± 0.1 mm ±1°
   X.XX (2 places) ± 0.05 mm
   X.XXX (3 places) ± 0.025 mm
3. *Terminal #1 identification mark located within marked area.*
4. *Unless specified, dimensions are symmetrical about center lines.*

202120-014

Figure 7. SKY85402-11 Package Dimensions

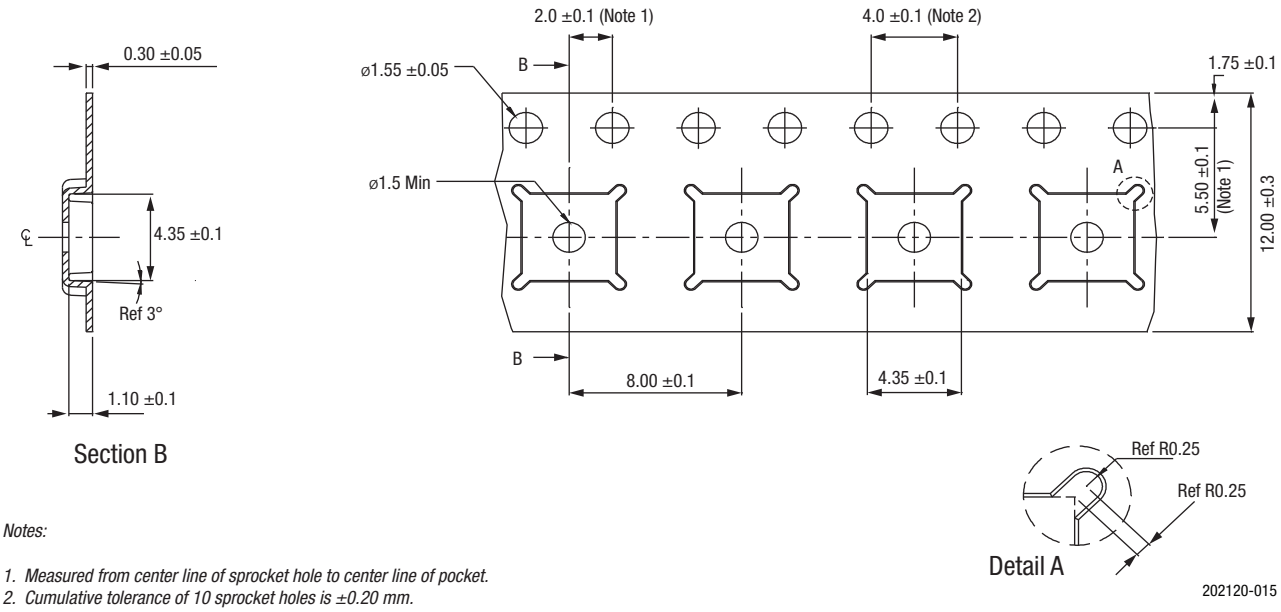

Notes:

1. *Measured from center line of sprocket hole to center line of pocket.*
2. *Cumulative tolerance of 10 sprocket holes is ±0.20 mm.*
3. *All dimensions are in millimeters, unless otherwise specified.*

Figure 8. SKY85402-11 Tape and Reel Dimensions

Ordering Information

Part Number	Product Description	Evaluation Board Part Number
SKY85402-11	High-Power (+22 dBm) 802.11ac WLAN PA with Integrated Power Detector	SKY85402-11EK1

Copyright © 2021 Skyworks Solutions, Inc. All Rights Reserved.

Information in this document is provided in connection with Skyworks Solutions, Inc. (“Skyworks”) products or services. These materials, including the information contained herein, are provided by Skyworks as a service to its customers and may be used for informational purposes only by the customer. Skyworks assumes no responsibility for errors or omissions in these materials or the information contained herein. Skyworks may change its documentation, products, services, specifications or product descriptions at any time, without notice. Skyworks makes no commitment to update the materials or information and shall have no responsibility whatsoever for conflicts, incompatibilities, or other difficulties arising from any future changes.

No license, whether express, implied, by estoppel or otherwise, is granted to any intellectual property rights by this document. Skyworks assumes no liability for any materials, products or information provided hereunder, including the sale, distribution, reproduction or use of Skyworks products, information or materials, except as may be provided in Skyworks Terms and Conditions of Sale.

THE MATERIALS, PRODUCTS AND INFORMATION ARE PROVIDED “AS IS” WITHOUT WARRANTY OF ANY KIND, WHETHER EXPRESS, IMPLIED, STATUTORY, OR OTHERWISE, INCLUDING FITNESS FOR A PARTICULAR PURPOSE OR USE, MERCHANTABILITY, PERFORMANCE, QUALITY OR NON-INFRINGEMENT OF ANY INTELLECTUAL PROPERTY RIGHT; ALL SUCH WARRANTIES ARE HEREBY EXPRESSLY DISCLAIMED. SKYWORKS DOES NOT WARRANT THE ACCURACY OR COMPLETENESS OF THE INFORMATION, TEXT, GRAPHICS OR OTHER ITEMS CONTAINED WITHIN THESE MATERIALS. SKYWORKS SHALL NOT BE LIABLE FOR ANY DAMAGES, INCLUDING BUT NOT LIMITED TO ANY SPECIAL, INDIRECT, INCIDENTAL, STATUTORY, OR CONSEQUENTIAL DAMAGES, INCLUDING WITHOUT LIMITATION, LOST REVENUES OR LOST PROFITS THAT MAY RESULT FROM THE USE OF THE MATERIALS OR INFORMATION, WHETHER OR NOT THE RECIPIENT OF MATERIALS HAS BEEN ADVISED OF THE POSSIBILITY OF SUCH DAMAGE.

Skyworks products are not intended for use in medical, lifesaving or life-sustaining applications, or other equipment in which the failure of the Skyworks products could lead to personal injury, death, physical or environmental damage. Skyworks customers using or selling Skyworks products for use in such applications do so at their own risk and agree to fully indemnify Skyworks for any damages resulting from such improper use or sale.

Customers are responsible for their products and applications using Skyworks products, which may deviate from published specifications as a result of design defects, errors, or operation of products outside of published parameters or design specifications. Customers should include design and operating safeguards to minimize these and other risks. Skyworks assumes no liability for applications assistance, customer product design, or damage to any equipment resulting from the use of Skyworks products outside of stated published specifications or parameters.

Skyworks and the Skyworks symbol are trademarks or registered trademarks of Skyworks Solutions, Inc. or its subsidiaries in the United States and other countries. Third-party brands and names are for identification purposes only, and are the property of their respective owners. Additional information, including relevant terms and conditions, posted at www.skyworksinc.com, are incorporated by reference.

Skyworks and the Skyworks symbol are trademarks or registered trademarks of Skyworks Solutions, Inc., in the United States and other countries. Third-party brands and names are for identification purposes only, and are the property of their respective owners. Additional information, including relevant terms and conditions, posted at www.skyworksinc.com, are incorporated by reference.

Mouser Electronics

Authorized Distributor

Click to View Pricing, Inventory, Delivery & Lifecycle Information:

Skyworks:

SKY85402-11