

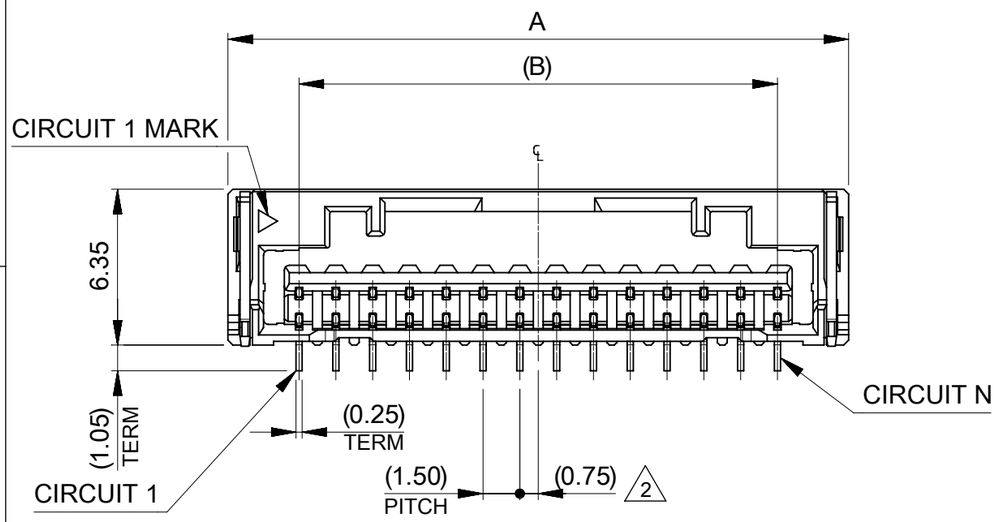

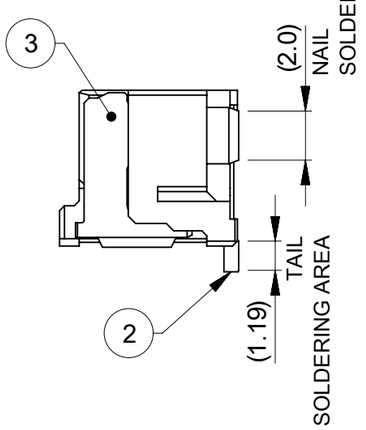

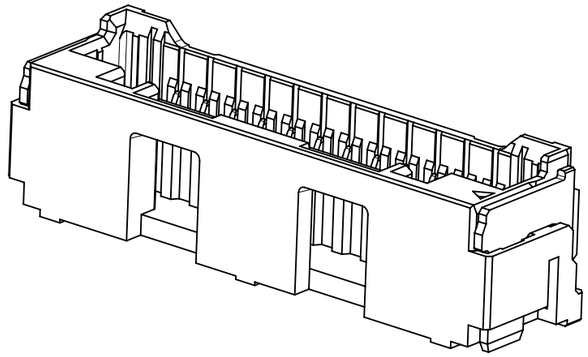

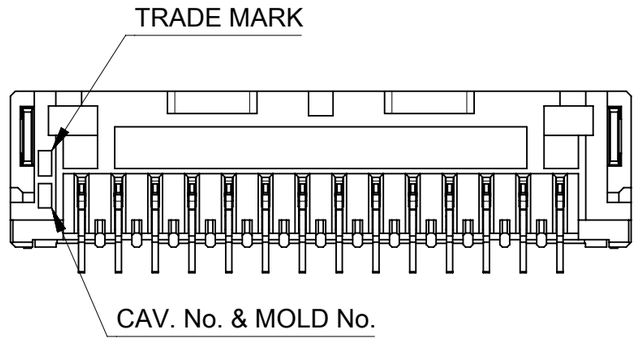

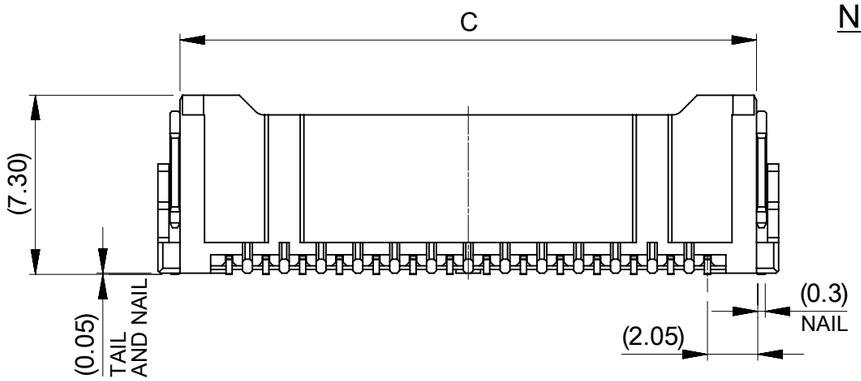

NOTES

1. 端子テール部及びネイルの平坦度:0.1 MAX
   TAIL AND NAIL COPLANARITY TO BE 0.1 MAX
2. 極数 = 偶数に適用
   APPLY FOR CIRCUIT SIZE = EVEN
3. 関連製品、書類はSHEET 5を参照のこと
   REFER TO SHEET 5 ABOUT RELATED PRODUCTS OR DOCUMENTS.
4. オーダー番号(製品番号)：SHEET 6の製品一覧を参照ください
   ORDER No (MATERIAL No)： REFER TO SHEET 6 FOR PRODUCT LIST

213225 ****

- 213225: シリーズ番号 / SERIES NO
- ****: 極数 / CIRCUIT SIZE; 色 / COLOR; 金めっき厚 / GOLD PLATING THICKNESS

番号 NO.	部品 PART	材質 MATERIAL	
①	ハウジング HOUSING	ポリアミド(PA) UL94V-0 色：SEE CHART POLYAMIDE(PA) UL94V-0 COLOR : SEE CHART	
②	ターミナル TERMINAL	銅合金 COPPER ALLOY	
		コンタクト部 CONTACT AREA	金めっき：製品一覧参照 GOLD PLATING：SEE PRODUCT LIST
		テール部 TAIL AREA	無光沢錫めっき：1.0 micro-meter MIN MATTE TIN PLATING：1.0 micro-meter MIN
		下地めっき(全面) UNDER PLATING (WHOLE SURFACE)	ニッケルめっき：1.0 micro-meter MIN NICKEL PLATING ：1.0 micro-meter MIN
③	ネイル NAIL	黄銅 BRASS	
		無光沢錫めっき ： 1.0 micro-meter MIN MATTE TIN PLATING	
		ニッケルめっき(下地)：1.0 micro-meter MIN NICKEL PLATING (UNDER PLATING)	

CIRCUIT	No.	GOLD THK [micro-meters]	No.	COLOR
02～15	1	0.1	0	ナチュラル NATURAL
	3	0.38	1	黒 BLACK
	7	0.76		

25	±0.25	21	26.8	±0.25	15
23.5		19.5	25.3		14
22		18	23.8		13
20.5		16.5	22.3		12
19		15	20.8		11
17.5		13.5	19.3		10
16		12	17.8		9
14.5		10.5	16.3		8
13		9	14.8		7
11.5		7.5	13.3		6
10		6	11.8		5
8.5	(±0.20)	4.5	10.3	(±0.20)	4
7		3	8.8		3
5.5		1.5	7.3		2
C		B	A		極数 CKT NO

THIS DRAWING CONTAINS INFORMATION THAT IS PROPRIETARY TO MOLEX ELECTRONIC TECHNOLOGIES, LLC AND SHOULD NOT BE USED WITHOUT WRITTEN PERMISSION

DIMENSION UNITS	SCALE
mm	NTS

GENERAL TOLERANCES (UNLESS SPECIFIED)

ANGULAR TOL	±	3.0 °
4 PLACES	±	0.2
3 PLACES	±	0.2
2 PLACES	±	0.2
1 PLACE	±	0.2
0 PLACES	±	0.2

DRAFT WHERE APPLICABLE MUST REMAIN WITHIN DIMENSIONS

CURRENT REV DESC:

EC NO: 742719
DRWN: MIKEDA01 2023/06/23
CHK'D: SAKIYAMA 2023/06/23
APPR: AIDA 2023/06/23

INITIAL REVISION:
DRWN: MIKEDA01 2019/11/07
APPR: KOMURAKAMI 2019/11/20

THIRD ANGLE PROJECTION | DRAWING: A3-SIZE | SERIES: 213225

molex

CLIK-MATE 1.5
SINGLE ROW SMT VT TYPE REC ASSY
GOLD PLATING

PRODUCT CUSTOMER DRAWING

DOCUMENT NUMBER	DOC TYPE	DOC PART	REVISION
2132250000-SD	PSD	000	F

MATERIAL NUMBER	CUSTOMER	SHEET NUMBER
	GENERAL	1 OF 6

DOCUMENT STATUS	P1	RELEASE DATE	2023/06/23 10:36:34

FORMAT: master-tb-prod-A3
REVISION: J
DATE: 2020/01/14

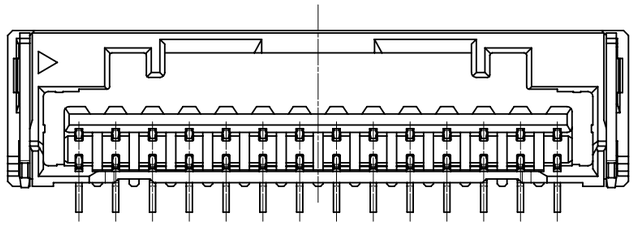

製品レイアウト
PRODUCT LAYOUT

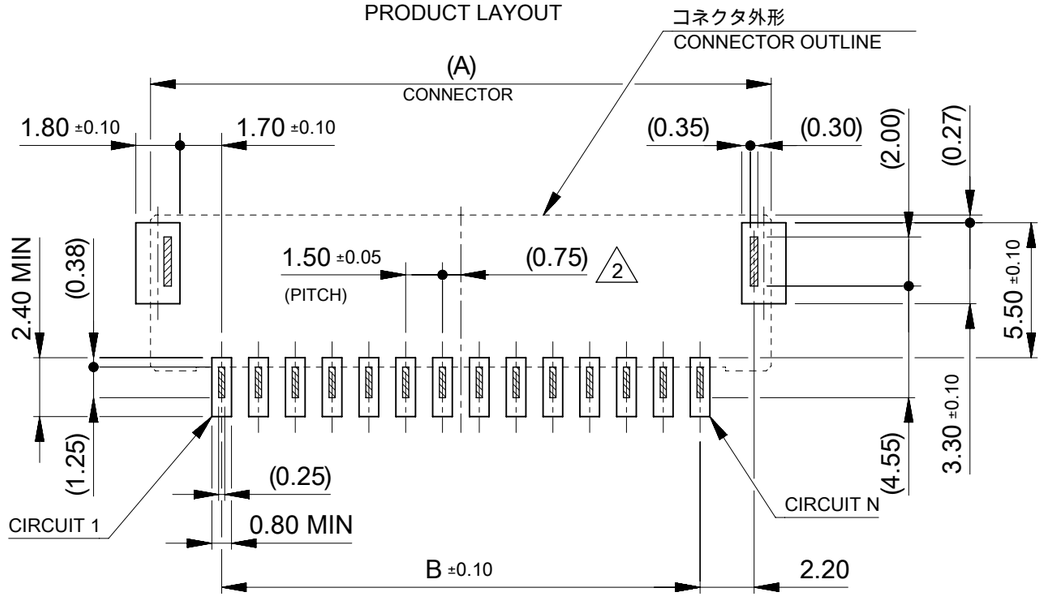

基板レイアウト(参考)
PCB PATTERN LAYOUT (REFERENCE)
(参考：メタルマスク厚さ 0.10mm, マスク開口率100%)
(REFERENCE:METAL MASK THICKNESS 0.10mm, APERTURE RATIO 100%)

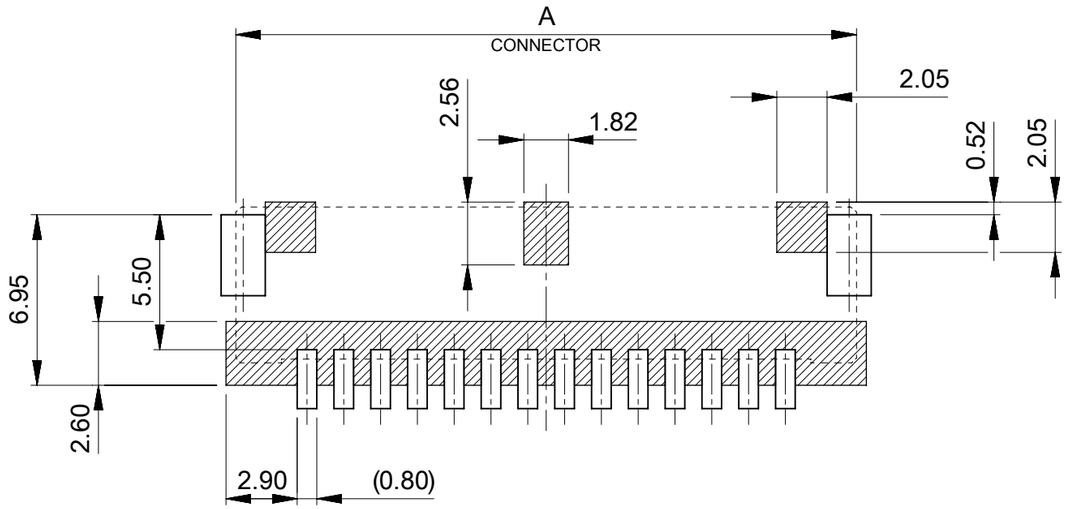

パターン非推奨エリア

パターンを引き回す際は、製品機能に影響がないことをご確認ください。
PATTERN IS NOT RECCOMENDED ON THE HATCHED AREA.
PLEASE CHECK NOT TO HAVE PROBLEM FOR PRODUCT FUNCTION
WHEN SETTING PATTERN ON THE HATCHED AREA.

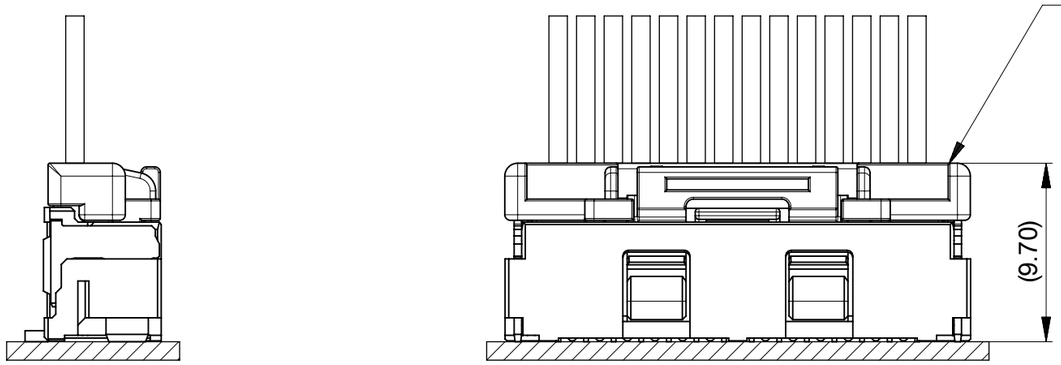

MATED CONNECTORS

THIS DRAWING CONTAINS INFORMATION THAT IS PROPRIETARY TO MOLEX ELECTRONIC TECHNOLOGIES, LLC AND SHOULD NOT BE USED WITHOUT WRITTEN PERMISSION

DIMENSION UNITS	SCALE
mm	NTS

GENERAL TOLERANCES (UNLESS SPECIFIED)		
ANGULAR TOL	±	3.0 °
4 PLACES	±	0.2
3 PLACES	±	0.2
2 PLACES	±	0.2
1 PLACE	±	0.2
0 PLACES	±	0.2

DRAFT WHERE APPLICABLE MUST REMAIN WITHIN DIMENSIONS

CURRENT REV DESC:

EC NO: 742719
DRWN: MIKEDA01 2023/06/23
CHK'D: SAKIYAMA 2023/06/23
APPR: AIDA 2023/06/23

INITIAL REVISION:
DRWN: MIKEDA01 2019/11/07
APPR: KOMURAKAMI 2019/11/20

molex

CLIK-MATE 1.5
SINGLE ROW SMT VT TYPE REC ASSY
GOLD PLATING

PRODUCT CUSTOMER DRAWING

DOCUMENT NUMBER	DOC TYPE	DOC PART	REVISION
2132250000-SD	PSD	000	F

THIRD ANGLE PROJECTION	DRAWING	SERIES	MATERIAL NUMBER	CUSTOMER	SHEET NUMBER
	A3-SIZE	213225		GENERAL	2 OF 6

DOCUMENT STATUS	P1	RELEASE DATE	2023/06/23 10:36:34

FORMAT: master-lb-prod-A3
REVISION: J
DATE: 2020/01/14

ロック形状および吸着エリア
LOCK SHAPE AND VACCUME AREA

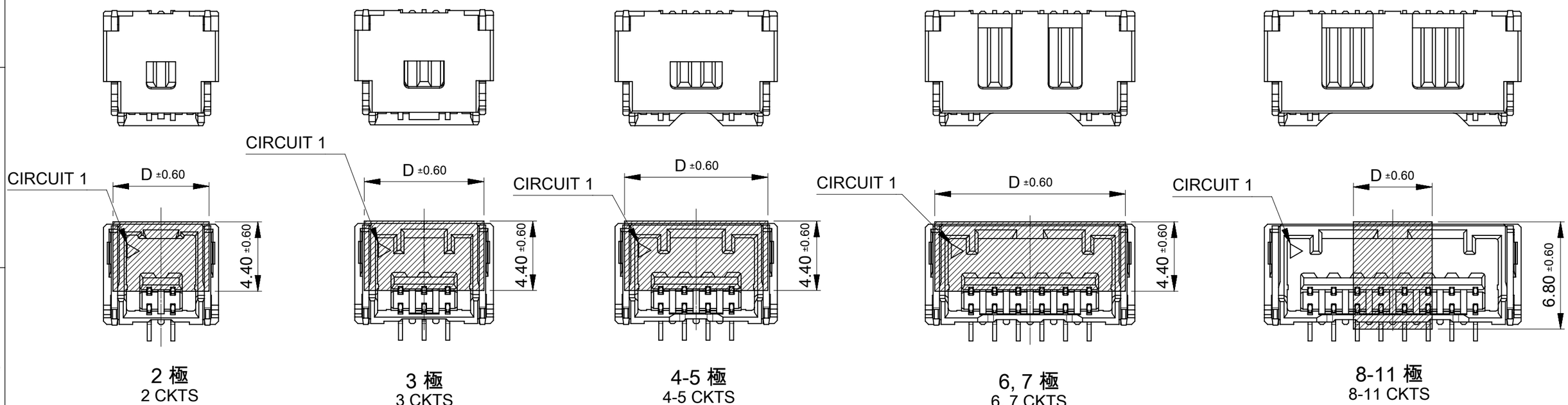

2 極
2 CKTS

3 極
3 CKTS

4-5 極
4-5 CKTS

6, 7 極
6, 7 CKTS

8-11 極
8-11 CKTS

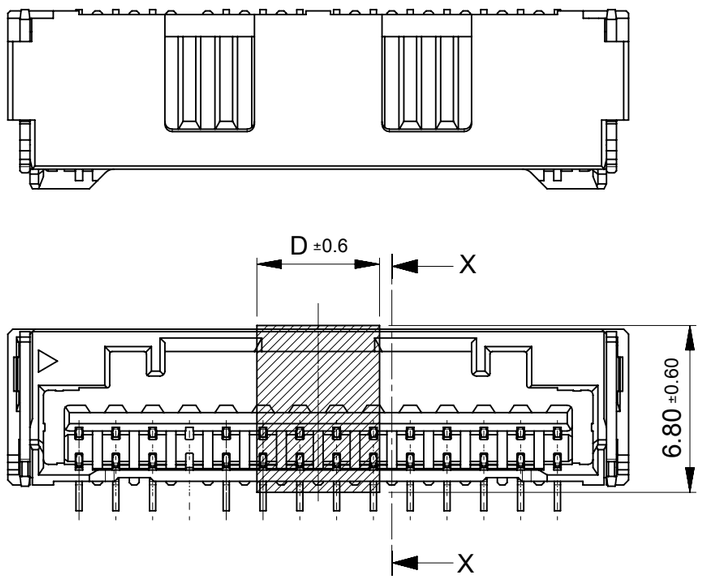

12-15 極
12-15 CKTS

SECTION X-X

D	極数 CKT NO
5.0	15
	14
	13
	12
	11
	10
	9
	8
13.6	7
12.1	6
10.6	5
9.1	4
7.6	3
6.1	2

THIS DRAWING CONTAINS INFORMATION THAT IS PROPRIETARY TO MOLEX ELECTRONIC TECHNOLOGIES, LLC AND SHOULD NOT BE USED WITHOUT WRITTEN PERMISSION

DIMENSION UNITS	SCALE
mm	NTS

GENERAL TOLERANCES (UNLESS SPECIFIED)

ANGULAR TOL	±	3.0 °
4 PLACES	±	0.2
3 PLACES	±	0.2
2 PLACES	±	0.2
1 PLACE	±	0.2
0 PLACES	±	0.2

DRAFT WHERE APPLICABLE MUST REMAIN WITHIN DIMENSIONS

CURRENT REV DESC:

EC NO: 742719
DRWN: MIKEDA01 2023/06/23
CHK'D: SAKIYAMA 2023/06/23
APPR: AIDA 2023/06/23

INITIAL REVISION:
DRWN: MIKEDA01 2019/11/07
APPR: KOMURAKAMI 2019/11/20

molex

CLIK-MATE 1.5
SINGLE ROW SMT VT TYPE REC ASSY
GOLD PLATING

PRODUCT CUSTOMER DRAWING

DOCUMENT NUMBER	DOC TYPE	DOC PART	REVISION
2132250000-SD	PSD	000	F

THIRD ANGLE PROJECTION	DRAWING	SERIES	MATERIAL NUMBER	CUSTOMER	SHEET NUMBER
	A3-SIZE	213225		GENERAL	3 OF 6

DOCUMENT STATUS	P1	RELEASE DATE	2023/06/23 10:36:34

FORMAT: master-lb-prod-A3
REVISION: J
DATE: 2020/01/14

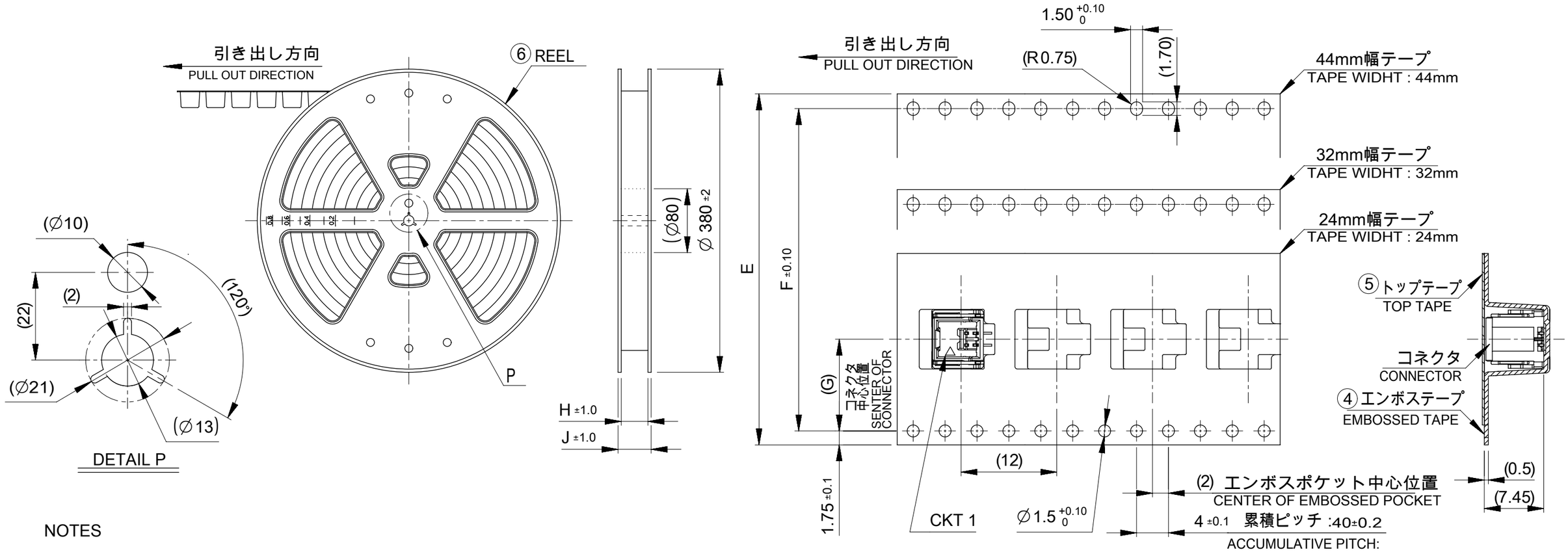

NOTES

5. 梱包数量 : 900個/リール
   NUMBER OF CONNECTORS : 900 PIECES/REEL
6. リードテープ長さ
   LEAD TAPE LENGTH

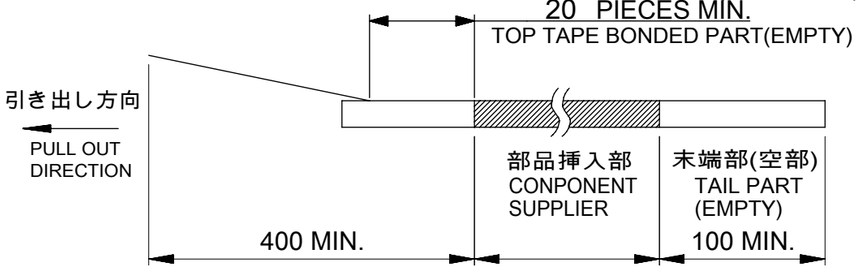

7. トップテープの剥離強度はJIS C0806-3に準拠。
   TOP TAPE PEELING FORCE IS DEFINED BY JIS C0806-3.
8. 本製品は乾燥剤入り、ハイバリア梱包である。
   THIS PRODUCT IS DELIVERD IN HIGH BARRIER PACKAGE WITH DESICCANT.

番号 NO.	部品 PART	材質 MATERIAL
④	エンボステープ EMBOSSED TAPE	ポリスチレン(PS) POLYSTYRENE(PS)
⑤	トップテープ TOP TAPE	ポリエチレン、ポリエチレンテレフタレート POLYETHLENE(PE), POLYETHYLENE TEREPHTHALATE(PET)
⑥	リール REEL	ポリスチレン(PS) <リサイクル材を含む> POLYSTYRENE(PS) <RECYCLE MATERIAL CONTAINED>

49.4	45.4	20.2	40.4	44±0.3	15
					14
					13
					12
					11
					10
37.4	33.4	14.2	28.4	32±0.3	9
					8
					7
					6
29.4	25.4	11.5	-	24 +0.3 -0.1	5
					4
					3
					2
J	H	G	F	エンボステープ幅E WIDTH OF TAPE	極数 CKT. NO.

THIS DRAWING CONTAINS INFORMATION THAT IS PROPRIETARY TO MOLEX ELECTRONIC TECHNOLOGIES, LLC AND SHOULD NOT BE USED WITHOUT WRITTEN PERMISSION

DIMENSION UNITS	SCALE
mm	NTS

GENERAL TOLERANCES (UNLESS SPECIFIED)

ANGULAR TOL	±	3.0 °
4 PLACES	±	0.2
3 PLACES	±	0.2
2 PLACES	±	0.2
1 PLACE	±	0.2
0 PLACES	±	0.2

DRAFT WHERE APPLICABLE MUST REMAIN WITHIN DIMENSIONS

CURRENT REV DESC:

EC NO: 742719
DRWN: MIKEDA01 2023/06/23
CHK'D: SAKIYAMA 2023/06/23
APPR: AIDA 2023/06/23

INITIAL REVISION:
DRWN: MIKEDA01 2019/11/07
APPR: KOMURAKAMI 2019/11/20

THIRD ANGLE PROJECTION | DRAWING: A3-SIZE | SERIES: 213225

molex

CLIK-MATE 1.5
SINGLE ROW SMT VT TYPE REC ASSY
GOLD PLATING

PRODUCT CUSTOMER DRAWING

DOCUMENT NUMBER	DOC TYPE	DOC PART	REVISION
2132250000-SD	PSD	000	F

MATERIAL NUMBER	CUSTOMER	SHEET NUMBER
	GENERAL	4 OF 6

DOCUMENT STATUS	P1	RELEASE DATE	2023/06/23 10:36:34

FORMAT: master-tb-prod-A3
REVISION: J
DATE: 2020/01/14

△3 適用製品及び各種仕様書
APPLICABLE PRODUCTS AND VARIOUS SPECIFICATIONS

梱包仕様書 PACKAGING SPECIFICATION	PART NUMBER	DOCUMENT NUMBER
	213225 ****	2132259200-SPK

適用嵌合相手 MATE WITH	HOUSING	TERMINAL (GOLD PLATING)		
		PLATING THK	#24-28	#28-30
製品番号 PRODUCT NUMBER	502578 ****	0.1 micro-meters	213028 1*00	213029 1*00
		0.38 micro-meters	213028 3*00	213029 3*00
		0.76 micro-meters	213028 7*00	213029 7*00
製品仕様書 PRODUCT SPECIFICATION	5025780004-PS			
アプリケーション仕様書 APPLICATION SPECIFICATION	AS-502578-001			

THIS DRAWING CONTAINS INFORMATION THAT IS PROPRIETARY TO MOLEX ELECTRONIC TECHNOLOGIES, LLC AND SHOULD NOT BE USED WITHOUT WRITTEN PERMISSION

DIMENSION UNITS	SCALE
mm	NTS

GENERAL TOLERANCES (UNLESS SPECIFIED)		
ANGULAR TOL	±	3.0 °
4 PLACES	±	0.2
3 PLACES	±	0.2
2 PLACES	±	0.2
1 PLACE	±	0.2
0 PLACES	±	0.2

DRAFT WHERE APPLICABLE MUST REMAIN WITHIN DIMENSIONS

CURRENT REV DESC:

EC NO: 742719
DRWN: MIKEDA01 2023/06/23
CHK'D: SAKIYAMA 2023/06/23
APPR: AIDA 2023/06/23

INITIAL REVISION:
DRWN: MIKEDA01 2019/11/07
APPR: KOMURAKAMI 2019/11/20

molex

CLIK-MATE 1.5
SINGLE ROW SMT VT TYPE REC ASSY
GOLD PLATING

PRODUCT CUSTOMER DRAWING

THIRD ANGLE PROJECTION	DRAWING	SERIES
	A3-SIZE	213225

DOCUMENT NUMBER	DOC TYPE	DOC PART	REVISION
2132250000-SD	PSD	000	F

MATERIAL NUMBER	CUSTOMER	SHEET NUMBER
	GENERAL	5 OF 6

DOCUMENT STATUS	P1	RELEASE DATE	2023/06/23 10:36:34

FORMAT: master-lb-prod-A3
REVISION: J
DATE: 2020/01/14

△4 製品一覧 PRODUCT LIST

黒 BLACK	ナチュラル NATURAL	HOUSING COLOR	
213225 1511	213225 1510	15	213225 **1* (GOLD PLATING THICKNESS: 0.1 micro-meters MIN)
213225 1411	213225 1410	14	
213225 1311	213225 1310	13	
213225 1211	213225 1210	12	
213225 1111	213225 1110	11	
213225 1011	213225 1010	10	
213225 0911	213225 0910	9	
213225 0811	213225 0810	8	
213225 0711	213225 0710	7	
213225 0611	213225 0610	6	
213225 0511	213225 0510	5	
213225 0411	213225 0410	4	
213225 0311	213225 0310	3	
213225 0211	213225 0210	2	
オーダー番号 ORDER No.		極数 CKT.	MODEL NO.

黒 BLACK	ナチュラル NATURAL	HOUSING COLOR	
213225 1531	213225 1530	15	213225 **3* (GOLD PLATING THICKNESS: 0.38 micro-meters MIN)
213225 1431	213225 1430	14	
213225 1331	213225 1330	13	
213225 1231	213225 1230	12	
213225 1131	213225 1130	11	
213225 1031	213225 1030	10	
213225 0931	213225 0930	9	
213225 0831	213225 0830	8	
213225 0731	213225 0730	7	
213225 0631	213225 0630	6	
213225 0531	213225 0530	5	
213225 0431	213225 0430	4	
213225 0331	213225 0330	3	
213225 0231	213225 0230	2	
オーダー番号 ORDER No.		極数 CKT.	MODEL NO.

黒 BLACK	ナチュラル NATURAL	HOUSING COLOR	
213225 1571	213225 1570	15	213225 **7* (GOLD PLATING THICKNESS: 0.76 micro-meters MIN)
213225 1471	213225 1470	14	
213225 1371	213225 1370	13	
213225 1271	213225 1270	12	
213225 1171	213225 1170	11	
213225 1071	213225 1070	10	
213225 0971	213225 0970	9	
213225 0871	213225 0870	8	
213225 0771	213225 0770	7	
213225 0671	213225 0670	6	
213225 0571	213225 0570	5	
213225 0471	213225 0470	4	
213225 0371	213225 0370	3	
213225 0271	213225 0270	2	
オーダー番号 ORDER No.		極数 CKT.	MODEL NO.

THIS DRAWING CONTAINS INFORMATION THAT IS PROPRIETARY TO MOLEX ELECTRONIC TECHNOLOGIES, LLC AND SHOULD NOT BE USED WITHOUT WRITTEN PERMISSION

DIMENSION UNITS	SCALE
mm	NTS

GENERAL TOLERANCES (UNLESS SPECIFIED)

ANGULAR TOL	±	3.0 °
4 PLACES	±	0.2
3 PLACES	±	0.2
2 PLACES	±	0.2
1 PLACE	±	0.2
0 PLACES	±	0.2

DRAFT WHERE APPLICABLE MUST REMAIN WITHIN DIMENSIONS

CURRENT REV DESC:

EC NO: 742719
DRWN: MIKEDA01 2023/06/23
CHK'D: SAKIYAMA 2023/06/23
APPR: AIDA 2023/06/23

INITIAL REVISION:
DRWN: MIKEDA01 2019/11/07
APPR: KOMURAKAMI 2019/11/20

molex

CLIK-MATE 1.5
SINGLE ROW SMT VT TYPE REC ASSY
GOLD PLATING

PRODUCT CUSTOMER DRAWING

DOCUMENT NUMBER	DOC TYPE	DOC PART	REVISION
2132250000-SD	PSD	000	F

THIRD ANGLE PROJECTION	DRAWING	SERIES	MATERIAL NUMBER	CUSTOMER	SHEET NUMBER
	A3-SIZE	213225		GENERAL	6 OF 6

DOCUMENT STATUS	P1	RELEASE DATE	2023/06/23 10:36:34

FORMAT: master-lib-prod-A3
REVISION: J
DATE: 2020/01/14