HiPerFRED

V_{RRM}	=	600 V
I_{DAV}	=	60 A
t_{rr}	=	40 ns

High Performance Fast Recovery Diode
Low Loss and Soft Recovery
1~ Rectifier Bridge

Part number

DPG60B600LB

Marking on Product: DPG60B600LB

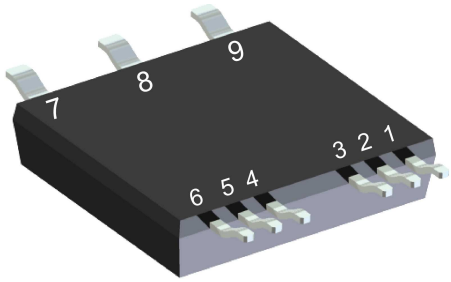

Backside: isolated

E72873

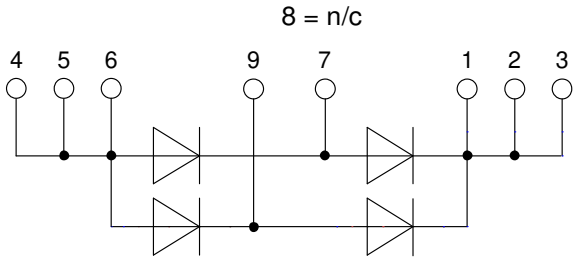

Features / Advantages:

- Planar passivated chips
- Very low leakage current
- Very short recovery time
- Improved thermal behaviour
- Very low Irm-values
- Very soft recovery behaviour
- Avalanche voltage rated for reliable operation
- Soft reverse recovery for low EMI/RFI
- Low Irm reduces:
  - Power dissipation within the diode
  - Turn-on loss in the commutating switch

Applications:

- Rectifiers in switch mode power supplies (SMPS)

Package: SMPD

- Isolation Voltage: 3000 V~
- Industry convenient outline
- RoHS compliant
- Epoxy meets UL 94V-0
- Soldering pins for PCB mounting
- Backside: DCB ceramic
- Reduced weight
- Advanced power cycling

Disclaimer Notice

Information furnished is believed to be accurate and reliable. However, users should independently evaluate the suitability of and test each product selected for their own applications. Littelfuse products are not designed for, and may not be used in, all applications. Read complete Disclaimer Notice at www.littelfuse.com/disclaimer-electronics.

© 2019 IXYS all rights reserved

Fast Diode

Symbol	Definition	Conditions		Ratings min.	typ.	max.	Unit
V_{RSM}	*max. non-repetitive reverse blocking voltage*		T_{VJ} = 25°C			600	V
V_{RRM}	*max. repetitive reverse blocking voltage*		T_{VJ} = 25°C			600	V
I_R	*reverse current, drain current*	V_R = 600 V	T_{VJ} = 25°C			250	µA
		V_R = 600 V	T_{VJ} = 150°C			2	mA
V_F	*forward voltage drop*	I_F = 30 A	T_{VJ} = 25°C			2.51	V
		I_F = 60 A				3.19	V
		I_F = 30 A	T_{VJ} = 150°C			1.59	V
		I_F = 60 A				2.21	V
I_{DAV}	*bridge output current*	T_C = 125°C	T_{VJ} = 175°C			60	A
		rectangular d = 0.5					
V_{F0}	*threshold voltage* } *for power loss calculation only*		T_{VJ} = 175°C			0.85	V
r_F	*slope resistance* }					17	mΩ
R_{thJC}	*thermal resistance junction to case*					1.1	K/W
R_{thCH}	*thermal resistance case to heatsink*				0.40		K/W
P_{tot}	*total power dissipation*		T_C = 25°C			135	W
I_{FSM}	*max. forward surge current*	t = 10 ms; (50 Hz), sine; V_R = 0 V	T_{VJ} = 45°C			250	A
C_J	*junction capacitance*	V_R = 300 V f = 1 MHz	T_{VJ} = 25°C		30		pF
I_{RM}	*max. reverse recovery current*		T_{VJ} = 25 °C		5.5		A
		I_F = 30 A; V_R = 300 V	T_{VJ} = 125 °C		12		A
t_{rr}	*reverse recovery time*	$-di_F/dt$ = 400 A/µs	T_{VJ} = 25 °C		40		ns
			T_{VJ} = 125 °C		85		ns

© 2019 IXYS all rights reserved

Package SMPD				Ratings			
Symbol	**Definition**	**Conditions**		**min.**	**typ.**	**max.**	**Unit**
I_{RMS}	*RMS current*	per terminal				50	A
T_{VJ}	*virtual junction temperature*			-55		175	°C
T_{op}	*operation temperature*			-55		150	°C
T_{stg}	*storage temperature*			-55		150	°C
Weight					8.5		g
F_C	*mounting force with clip*			40		130	N
$d_{Spp/App}$	*creepage distance on surface | striking distance through air*		*terminal to terminal*	1.6			mm
$d_{Spb/Apb}$			*terminal to backside*	4.0			mm
V_{ISOL}	*isolation voltage*	t = 1 second	50/60 Hz, RMS; I_{ISOL} ≤ 1 mA	3000			V
		t = 1 minute		2500			V

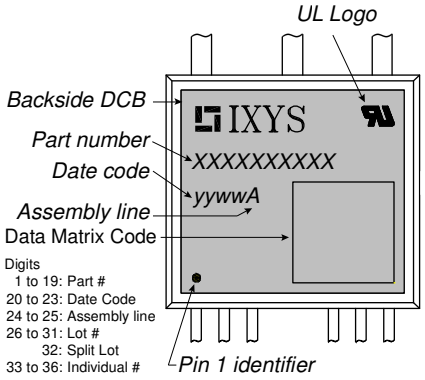

Part description

D = Diode
P = HiPerFRED
G = extreme fast
60 = Current Rating [A]
B = 1~ Rectifier Bridge
600 = Reverse Voltage [V]
LB = SMPD-B

Ordering	Ordering Number	Marking on Product	Delivery Mode	Quantity	Code No.
Standard	DPG60B600LB-TUB	DPG60B600LB	Tube	20	524759
Alternative	DPG60B600LB-TRR	DPG60B600LB	Tape & Reel	200	516148

Equivalent Circuits for Simulation

** on die level* T_{VJ} = 175 °C

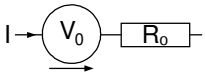

		Fast Diode	
$V_{0\ max}$	*threshold voltage*	0.85	V
$R_{0\ max}$	*slope resistance **	17	mΩ

© 2019 IXYS all rights reserved

Outlines SMPD

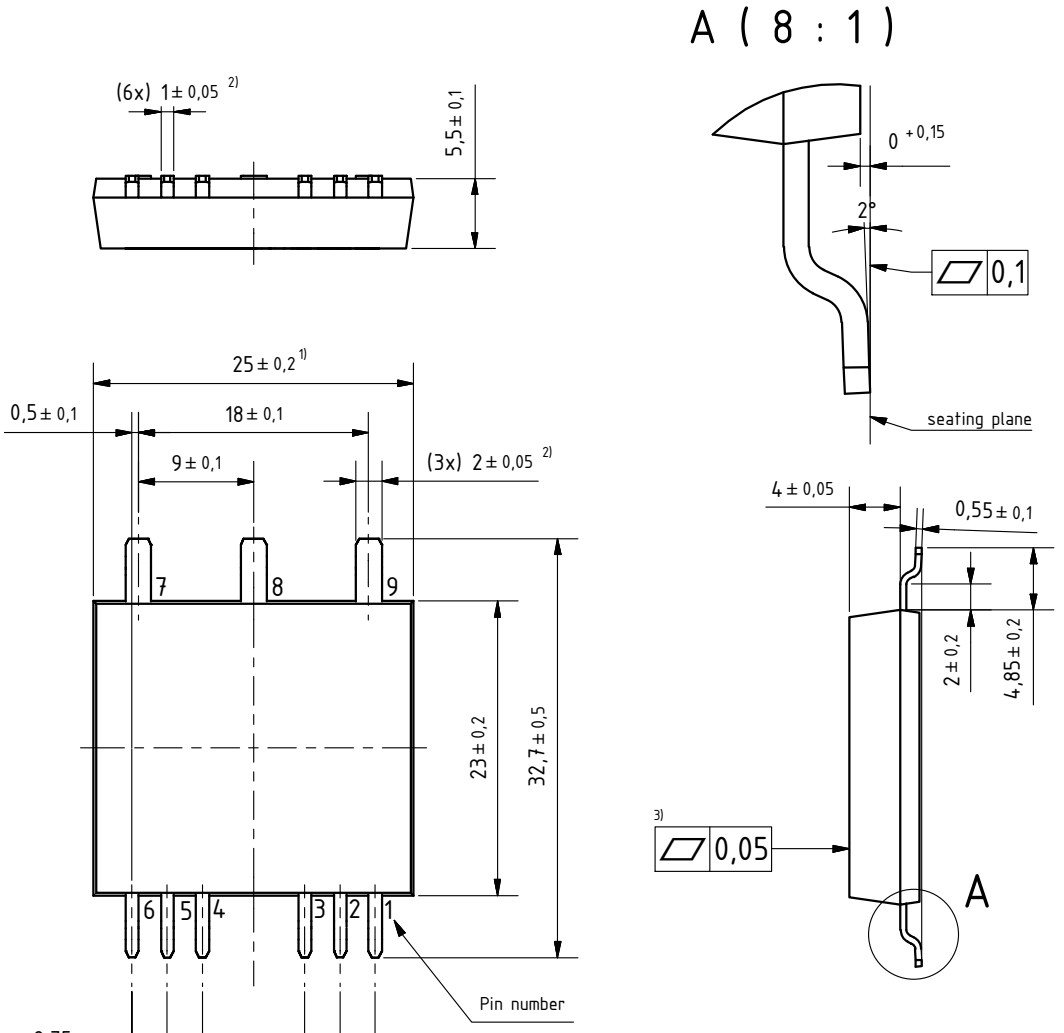

Notes:
1) potrusion may add 0.2 mm max. on each side
2) additional max. 0.05 mm per side by punching misalignement or overlap of dam bar or bending compression
3) DCB area 10 to 50 µm convex;
position of DCB area in relation to plastic rim: ±25 µm (measured 2 mm from Cu rim)
4) terminal plating: 0.2 - 1 µm Ni + 10 - 25 µm Sn (gal v.)
cutting edges may be partially free of plating

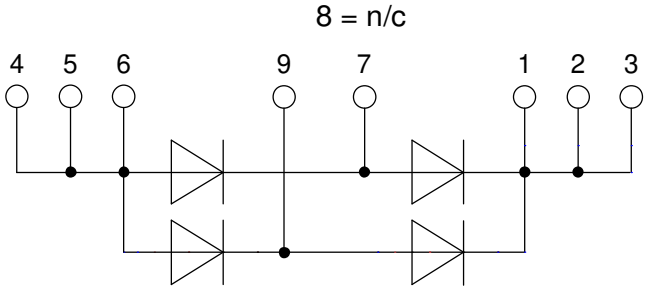

© 2019 IXYS all rights reserved

Fast Diode

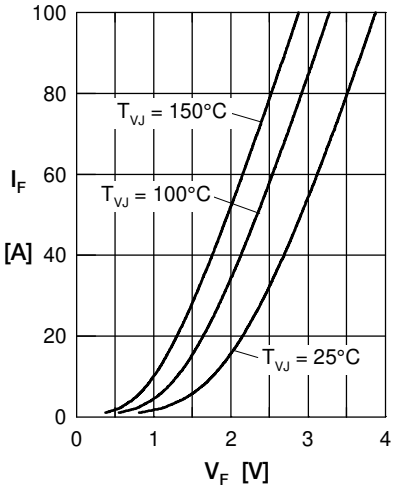

Fig. 1 Forward current I_F versus V_F

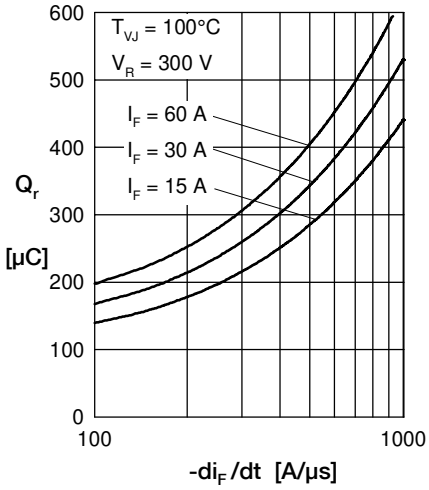

Fig. 2 Typ. reverse recov. charge Q_r versus $-di_F/dt$

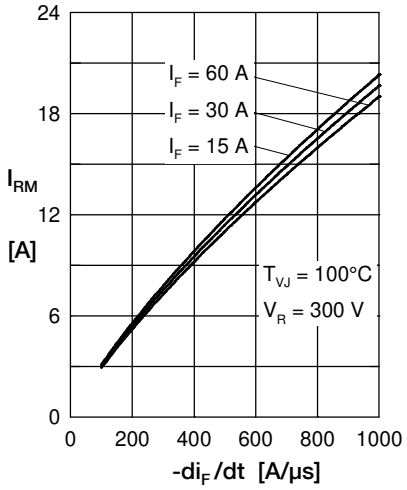

Fig. 3 Typ. peak reverse current I_{RM} versus $-di_F/dt$

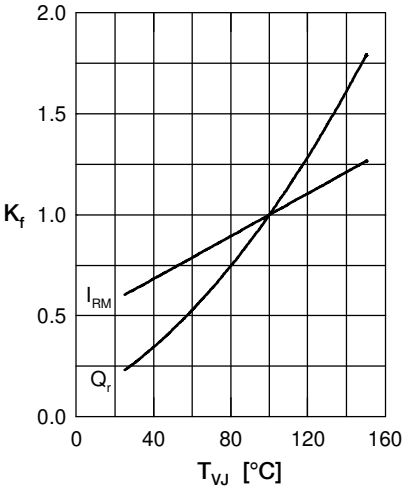

Fig. 4 Dynamic parameters Q_r, I_{RM} versus T_{VJ}

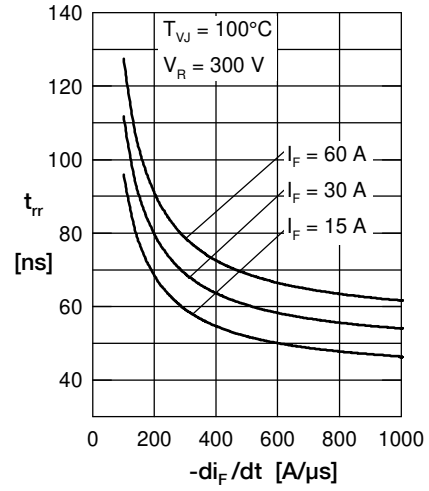

Fig. 5 Typ. recovery time t_{rr} versus $-di_F/dt$

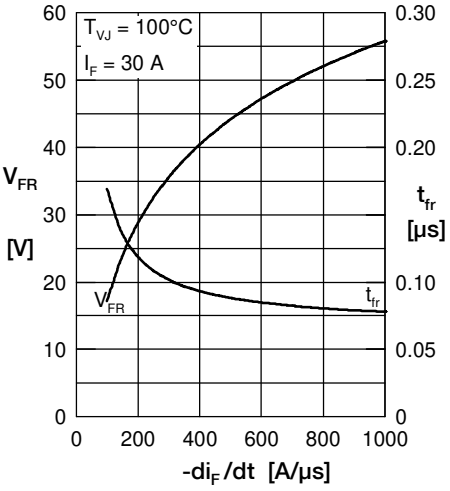

Fig. 6 Typ. peak forward voltage V_{FR} and t_{fr} versus di_F/dt

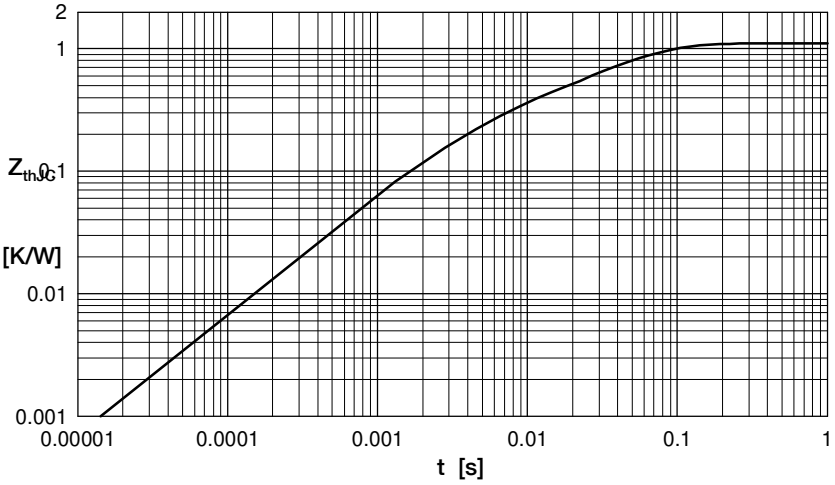

Fig. 7 Transient thermal impedance junction to case

Constants for Z_{thJC} calculation:

i	R_{thi} (K/W)	t_i (s)
1	0.465	0.0052
2	0.179	0.0003
3	0.256	0.0396

© 2019 IXYS all rights reserved