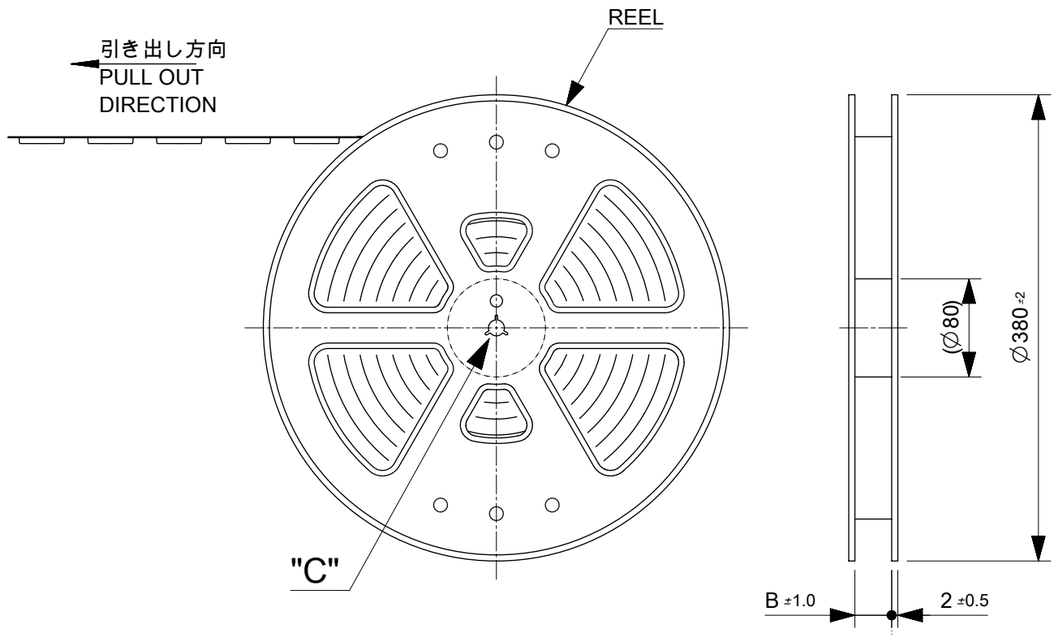

注記 NOTES

1. 製品詳細寸法については製品単体図面を参照下さい。
   DETAIL DIMENSION, SEE PRODUCT DRAWING
2. 梱包数量：6000 個 / リール
   NUMBER OF CONNECTORS : 6000 PCS/REEL
3. リードテープ長さ LEAD TAPE LENGTH

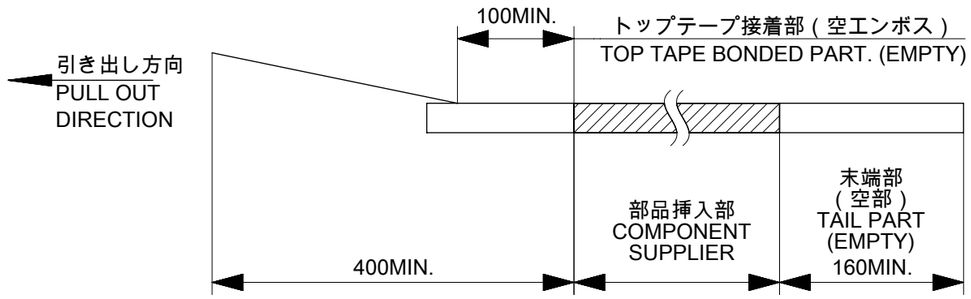

4. 材料 MATERIAL
   キャリアテープ (CARRIER TAPE) : ポリスチレン (POLYSTYRENE)
   トップテープ (TOP TAPE) : PET , PE , PEF
   リール (REEL) : ポリスチレン (PS) <リサイクル材を含む>
   POLYSTYRENE (PS) <RECYCLE MATERIAL CONTAINED>
5. カバーテープの剥離強度については、 IEC60286-3 に準拠
   COVER TAPE PEEL FORCE IS DEFINED BY IEC 60286-3.

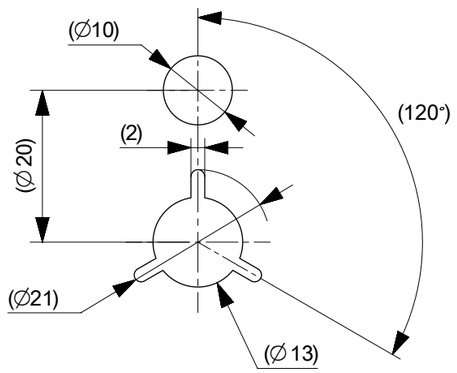

DETAIL C

CONNECTOR SERIES NO. 502078**68

THIS DRAWING CONTAINS INFORMATION THAT IS PROPRIETARY TO MOLEX ELECTRONIC TECHNOLOGIES, LLC AND SHOULD NOT BE USED WITHOUT WRITTEN PERMISSION

DIMENSION UNITS	SCALE
mm	1:1

GENERAL TOLERANCES (UNLESS SPECIFIED)

ANGULAR TOL	± °
4 PLACES	±
3 PLACES	±
2 PLACES	±
1 PLACE	±
0 PLACES	±

DRAFT WHERE APPLICABLE MUST REMAIN WITHIN DIMENSIONS

CURRENT REV DESC:

EC NO: 852989
DRWN: VYSHNC 2025/06/12
CHK'D: MRAMAKRISHNA 2026/04/15
APPR: YNAITO 2026/04/15

INITIAL REVISION:
DRWN: RYANAIDANI 2016/11/24
APPR: MSASAO 2017/01/27

molex

0.25MM PITCH FPC CONN
HGT =1.0 HSG ASSY EMBOSSED TAPE PACKAGE

PRODUCT CUSTOMER DRAWING

DOCUMENT NUMBER	DOC TYPE	DOC PART	REVISION
5020780001	PSD	000	B

THIRD ANGLE PROJECTION	DRAWING	SERIES	MATERIAL NUMBER	CUSTOMER	SHEET NUMBER
	A3-SIZE	502078	SEE SHEET 2	GENERAL	1 OF 3

DOCUMENT STATUS	P1	RELEASE DATE	2026/04/15 10:40:35

FORMAT: master-ib-prod-A3
REVISION: J1
DATE: 2021/05/01

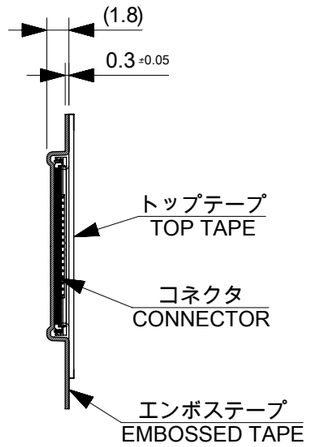

SECTION Y-Y

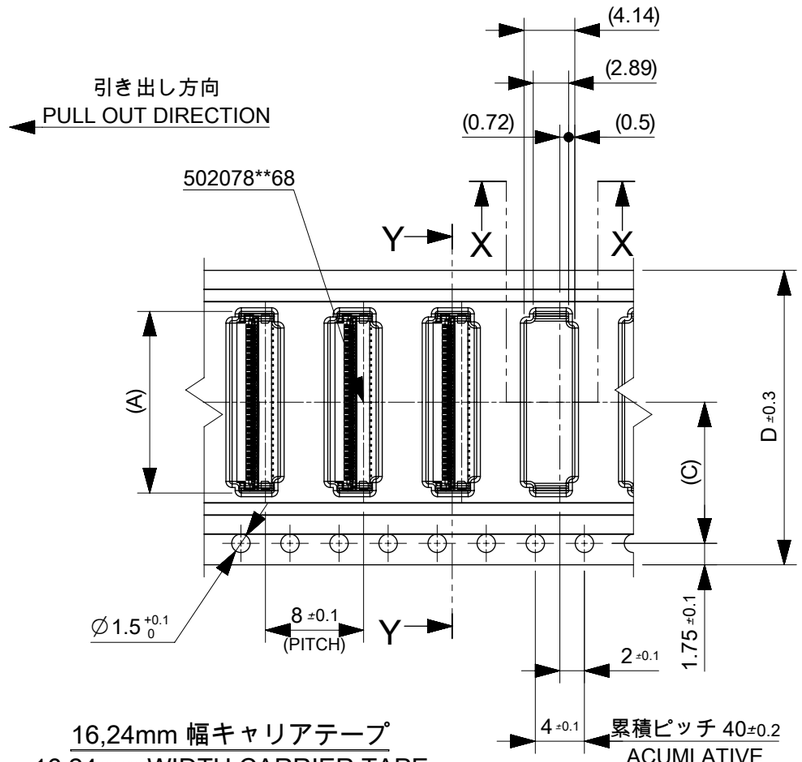

16,24mm 幅キャリアテープ
16,24mm WIDTH CARRIER TAPE

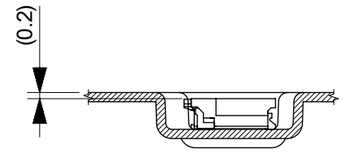

SECTION X-X

D キャリアテープ幅 CARRIER TAPE WIDTH	C	B	(A)	オーダー番号 ORDER NO.	極数 CIRCUITS
				CONNECTOR SERIES NO.	502078**68
24	11.5	25.4	15.3	5020785362	53
			14.8	5020785162	51
			13.3	5020784562	45
			12.3	5020784162	41
			11.8	5020783962	39
			11.3	5020783762	37
			10.3	5020783362	33
			8.3	5020782562	25
			7.3	5020782162	21
16	7.5	17.4	6.3	5020781762	17
			5.3	5020781362	13

THIS DRAWING CONTAINS INFORMATION THAT IS PROPRIETARY TO MOLEX ELECTRONIC TECHNOLOGIES, LLC AND SHOULD NOT BE USED WITHOUT WRITTEN PERMISSION

DIMENSION UNITS	SCALE
mm	1:1

GENERAL TOLERANCES (UNLESS SPECIFIED)

ANGULAR TOL	± °
4 PLACES	±
3 PLACES	±
2 PLACES	±
1 PLACE	±
0 PLACES	±

DRAFT WHERE APPLICABLE MUST REMAIN WITHIN DIMENSIONS

CURRENT REV DESC:

EC NO: 852989
DRWN: VYSHNC 2025/06/12
CHK'D: MRAMAKRISHNA 2026/04/15
APPR: YNAITO 2026/04/15

INITIAL REVISION:
DRWN: RYANAIDANI 2016/11/24
APPR: MSASAO 2017/01/27

molex

0.25MM PITCH FPC CONN
HGT =1.0 HSG ASSY EMBOSSED TAPE PACKAGE

PRODUCT CUSTOMER DRAWING

DOCUMENT NUMBER	DOC TYPE	DOC PART	REVISION
5020780001	PSD	000	B

THIRD ANGLE PROJECTION	DRAWING	SERIES	MATERIAL NUMBER	CUSTOMER	SHEET NUMBER
	A3-SIZE	502078	SEE TABLE	GENERAL	2 OF 3

DOCUMENT STATUS	P1	RELEASE DATE	2026/04/15 10:40:35

FORMAT: master-tb-prod-A3
REVISION: J1
DATE: 2021/05/01

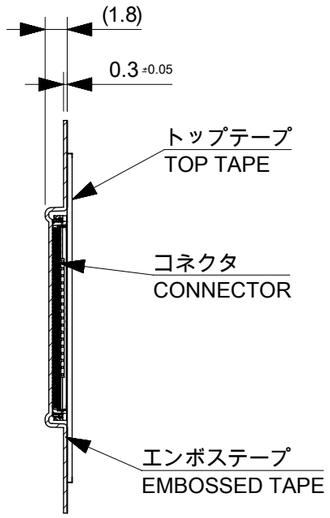

SECTION Y-Y

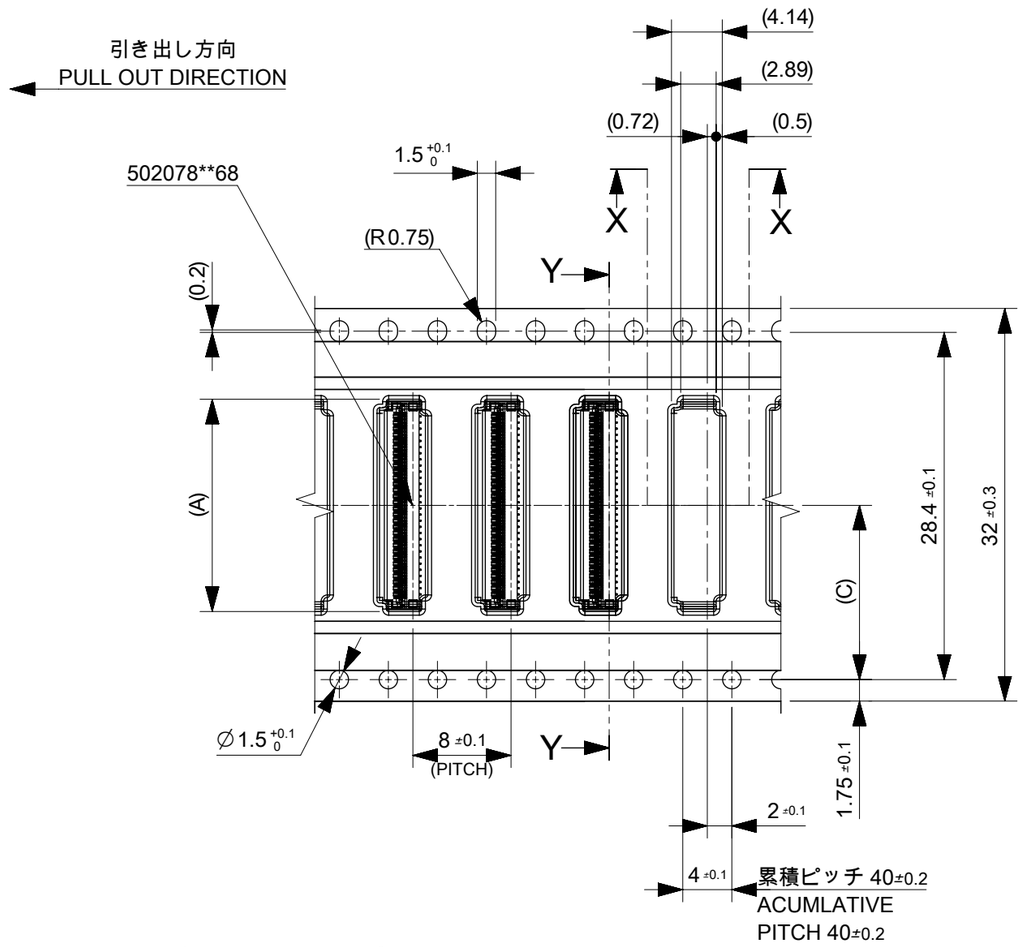

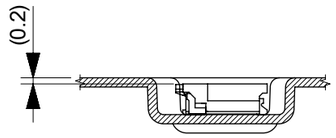

SECTION X-X

32mm 幅キャリアテープ
32mm WIDTH CARRIER TAPE

14.2	33.4	17.3	5020786162	61
C	B	(A)	オーダー番号 ORDER NO.	極数 CIRCUITS
CONNECTOR SERIES NO.				502078**68

THIS DRAWING CONTAINS INFORMATION THAT IS PROPRIETARY TO MOLEX ELECTRONIC TECHNOLOGIES, LLC AND SHOULD NOT BE USED WITHOUT WRITTEN PERMISSION

DIMENSION UNITS	mm
SCALE	1:1
GENERAL TOLERANCES (UNLESS SPECIFIED)	
ANGULAR TOL ±	°
4 PLACES ±	
3 PLACES ±	
2 PLACES ±	
1 PLACE ±	
0 PLACES ±	
DRAFT WHERE APPLICABLE MUST REMAIN WITHIN DIMENSIONS	

CURRENT REV DESC:

EC NO: 852989
DRWN: VYSHNC 2025/06/12
CHK'D: MRAMAKRISHNA 2026/04/15
APPR: YNAITO 2026/04/15

INITIAL REVISION:
DRWN: RYANAIDANI 2016/11/24
APPR: MSASAO 2017/01/27

molex

0.25MM PITCH FPC CONN
HGT =1.0 HSG ASSY EMBOSSED TAPE PACKAGE

PRODUCT CUSTOMER DRAWING

DOCUMENT NUMBER	DOC TYPE	DOC PART	REVISION
5020780001	PSD	000	B

THIRD ANGLE PROJECTION	DRAWING	SERIES	MATERIAL NUMBER	CUSTOMER	SHEET NUMBER
	A3-SIZE	502078	SEE TABLE	GENERAL	3 OF 3

DOCUMENT STATUS	P1	RELEASE DATE	2026/04/15 10:40:35

FORMAT: master-tb-prod-A3
REVISION: J1
DATE: 2021/05/01

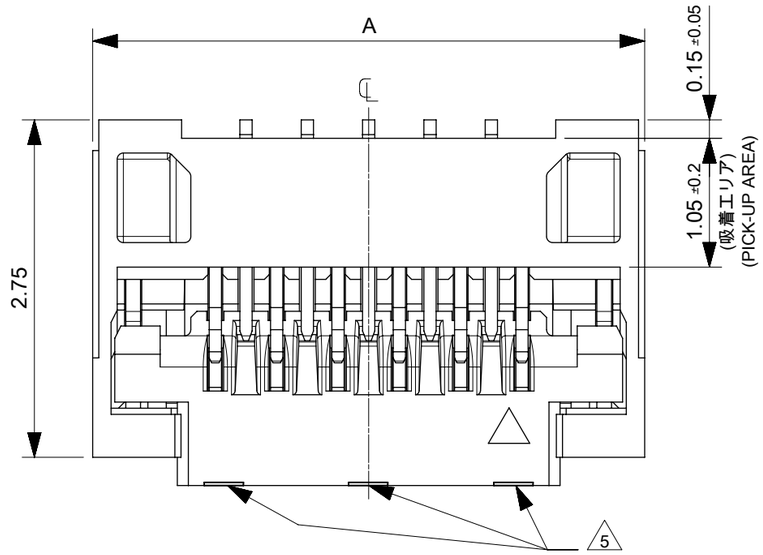

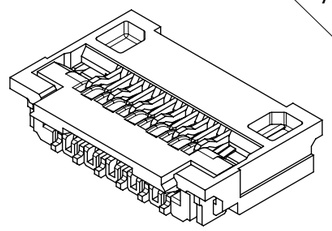

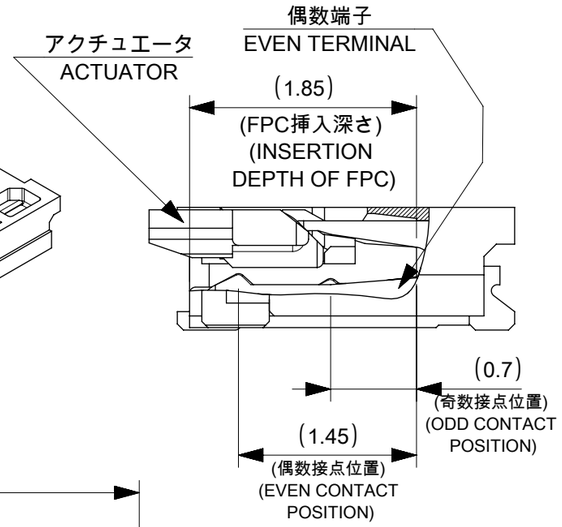

SECTION Y-Y

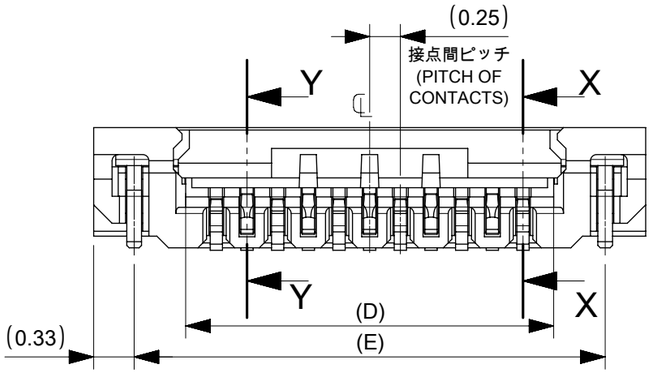

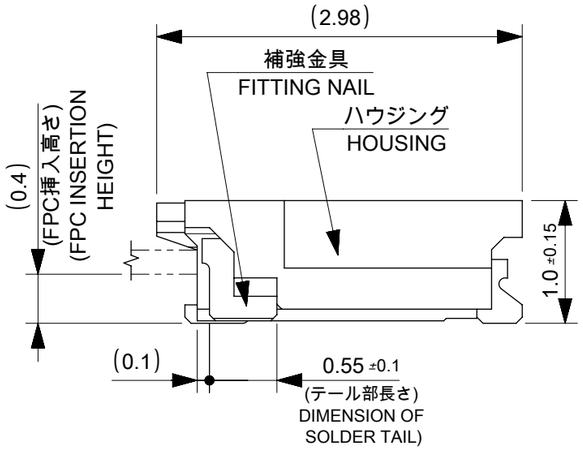

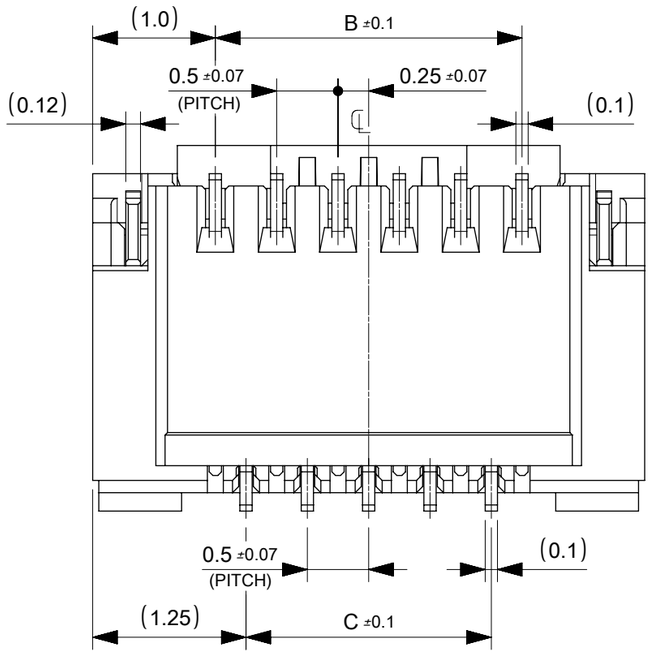

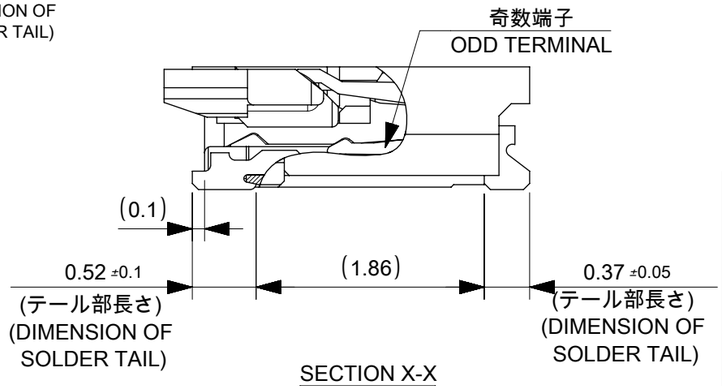

SECTION X-X

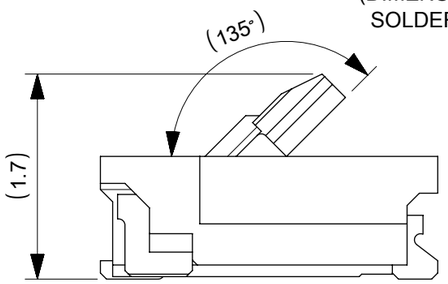

アクチュエータ開放位置
ACTUATOR OPENING POSITION

注記 NOTES

1. 使用材料 MATERIALS
   ハウジング : 液晶ポリマー(UL94V-0 、ベージュ)
   アクチュエータ : ポリアミド(UL94HB 、黒色)
   端子 : リン青銅
   補強金具 : リン青銅
   HOUSING : LCP (BEIGE)
   ACTUATOR : PA (BLACK)
   TERMINAL : PHOSPHOR BRONZE
   FITTING NAIL : PHOSPHOR BRONZE
2. メッキ仕様 PLATING
   端子 TERMINAL
   接点部：金メッキ0.1 μm以上
   テール部：金メッキ
   下地：ニッケルメッキ1.0 μm以上
   CONTACT AREA : Gold PLATING 0.1μm MINIMUM
   TAIL AREA : Gold PLATING
   UNDER PLATING : Nickel PLATING 1.0μm MINIMUM
   金具 FITTING NAIL
   表面：スズメッキ 1.0 μm以上
   下地：ニッケルメッキ1.0 μm以上
   ALL OVER : Tin PLATING 1.0μm MINIMUM
   UNDER PLATING : Nickel PLATING 1.0μm MINIMUM
3. 端子、補強金具のコプラナリティーは0.1以下とする
   COPLANALITY OF SOLDER TAILS AND FITTING NAILS : 0.1MAX.
4. 一般公差：± 0.3
   GENERAL TOLERANCES: ±0.3
5. アクチュエータの図示箇所にゲート逃げの凹みがつきます
   （極数により、レイアウトが異なります）
   THERE ARE DENT SHAPES AT ACTUATOR FOR MOLDING GATE
   （LAYOUT DIFFER ACCORDING TO CIRCUIT NUMBER）
6. 塩素系・臭素系難燃剤非使用
   CHLORINATED AND BROMINATED FLAME RETARDANTS FREE

E	D	C	B	A	ORDER No.	MATERIAL No.	CIRCUIT =N
16.34	15.5	14.5	15	17	5020786162	5020786168	61
14.34	13.5	12.5	13	15	5020785362	5020785368	53
13.84	13	12	12.5	14.5	5020785162	5020785168	51
12.34	11.5	10.5	11	13	5020784562	5020784568	45
11.34	10.5	9.5	10	12	5020784162	5020784168	41
10.84	10	9	9.5	11.5	5020783962	5020783968	39
10.34	9.5	8.5	9	11	5020783762	5020783768	37
9.34	8.5	7.5	8	10	5020783362	5020783368	33
7.34	6.5	5.5	6	8	5020782562	5020782568	25
6.34	5.5	4.5	5	7	5020782162	5020782168	21
5.34	4.5	3.5	4	6	5020781762	5020781768	17
4.34	3.5	2.5	3	5	5020781362	5020781368	13

CONNECTOR SERIES No. 502078**68

THIS DRAWING CONTAINS INFORMATION THAT IS PROPRIETARY TO MOLEX ELECTRONIC TECHNOLOGIES, LLC AND SHOULD NOT BE USED WITHOUT WRITTEN PERMISSION

DIMENSION UNITS: mm
SCALE: 20:1
GENERAL TOLERANCES (UNLESS SPECIFIED)
ANGULAR TOL ± °
4 PLACES ±
3 PLACES ±
2 PLACES ±
1 PLACE ±
0 PLACES ±
DRAFT WHERE APPLICABLE MUST REMAIN WITHIN DIMENSIONS

CURRENT REV DESC:

EC NO: 852989
DRWN: VYSHNC 2025/06/12
CHK'D: MRAMAKRISHNA 2026/04/15
APPR: YNAITO 2026/04/15
INITIAL REVISION:
DRWN: RYANAIDANI 2016/11/24
APPR: MSASAO 2017/01/27

molex

0.25 PITCH FPC CONN E/O
HGT=1.0 BTM CONTACT TYPE

PRODUCT CUSTOMER DRAWING

DOCUMENT NUMBER	DOC TYPE	DOC PART	REVISION
5020781001	PSD	000	C

THIRD ANGLE PROJECTION | DRAWING: A3-SIZE | SERIES: 502078
MATERIAL NUMBER: SEE TABLE | CUSTOMER: GENERAL | SHEET NUMBER: 1 OF 2

DOCUMENT STATUS	P1	RELEASE DATE	2026/04/15 10:40:38

FORMAT: master-tb-prod-A3
REVISION: J1
DATE: 2021/05/01

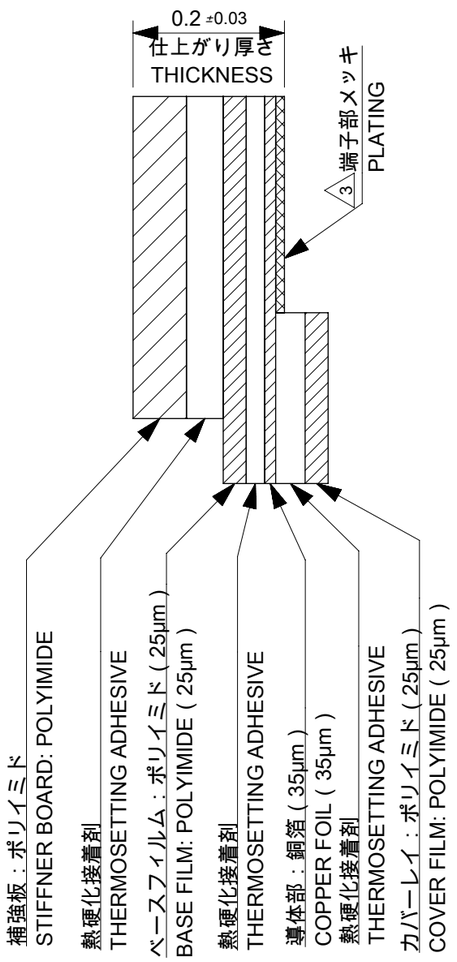

FPC 構成材料例
EXAMPLE OF FPC
COMPOSITION MATERIAL

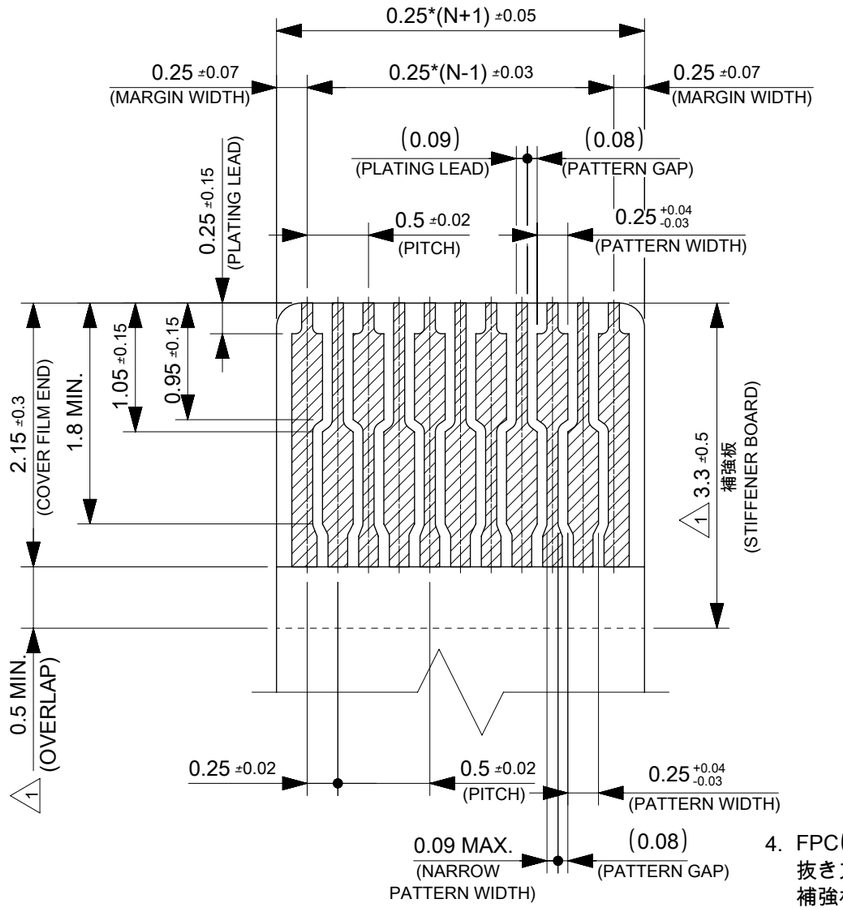

適合するFPC推奨寸法
APPLICABLE FPC
RECOMMENDED DIMENSION
(端子部仕上がり厚さ：0.2±0.03)
(THICKNESS: 0.2±0.03)

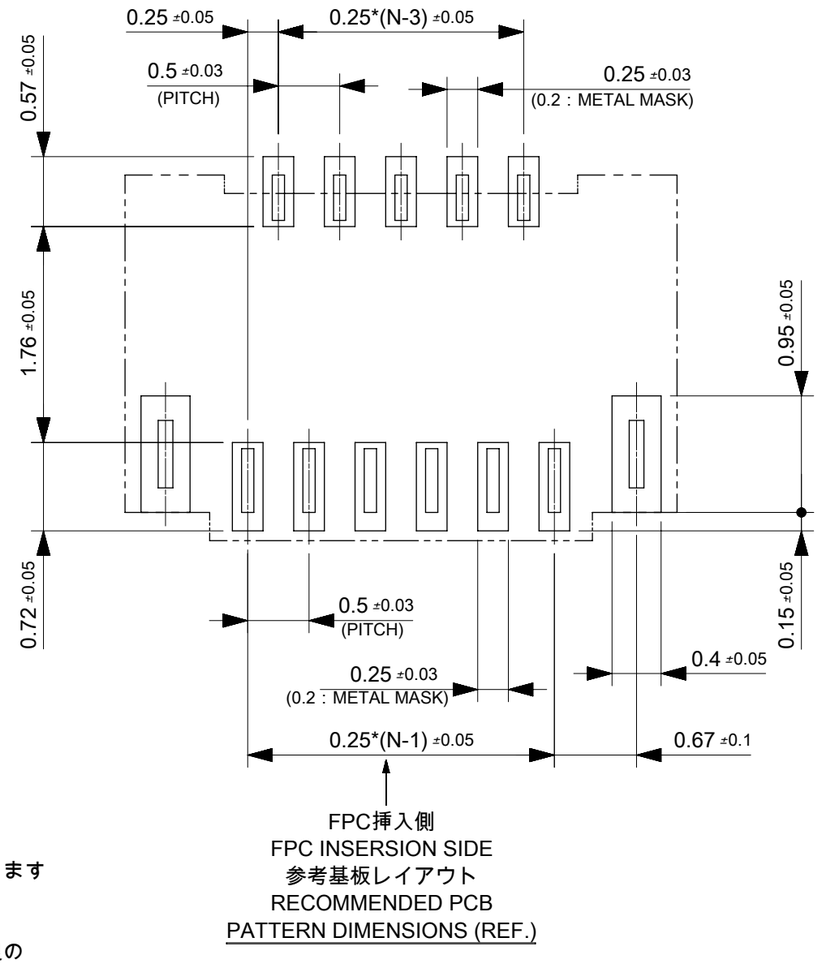

参考基板レイアウト
RECOMMENDED PCB
PATTERN DIMENSIONS (REF.)

4. FPCについて(ABOUT FPC)
抜き方向は、導体側から補強板側を推奨します
補強板材質は、ポリイミドを推奨します
接着剤は熱硬化接着剤を推奨します
なお、接着剤の接点部への付着は導通不良の
原因となりますので染み出しがないよう、お願いします。
FPCに規定された定格温度が FPC 単体前提である場合が御座います。
コネクタと組み合わせての実使用に置いて、接着層が劣化するなどの信頼性を満足できないケースを回避するため、
実機での評価/確認をお願い致します。
RECOMMENDED PUNCHER DIRECTION: FROM CONDUCTOR SIDE TO STIFFENER BORAD SIDE
RECOMMENDED MATERIAL: STIFFENER BOARD: POLYIMIDE
BONDING AGENT: THERMOSETTING AGENT
PLEASE PUT APPROPRIATE AMOUNT OF ADHESIVE ON THE CONTACT AREA BECAUSE THE EXTRA
ADHESIVE MAY CAUSE THE DEFECT IN ELECTRICAL CONTINUITY.
NOTE: WHEN ACTUALLY USING IT WITH CONNECTOR, PLEASE DO THE EVALUATION AND THE CONFIRMATION
WITH AN ACTUAL EQUIPMENT TO EVADE THE CASE WHERE RELIABILITY CANNOT BE FILLED
(THE ADHESIVE LINE OF FPC IS DETERIORATED ETC,)

注記 NOTES

1. 補強板長さが図面通り確保できない場合は、カバーレイと
補強板のオーバーラップ寸法を 0.5mm 以上としてください
WHEN STIFFENER BOARD DIMENSION CAN NOT
SECURE AS DRAWING, PLEASE GIVE THE OVERLAP
SIZE OF COVER FILM AND STIFFENER BOARD AS
0.5mm MINIMUM
2. 推奨ペースト厚 : 100μm
推奨マスク開口率 : 80%
RECOMMEND SCREEN THICKNESS : 100μm
RECOMMEND SCREEN OPEN RATIO : 80%
3. FPCパターンのメッキ仕様は
金メッキ： 0.1μm 以上
下地ニッケルメッキ： 2~6μm
FPC PATTERN PLATING
GOLD PLATING : 0.1μm MINIMUM
NICKEL UNDER PLATING : 2~6μm

THIS DRAWING CONTAINS INFORMATION THAT IS PROPRIETARY TO MOLEX ELECTRONIC TECHNOLOGIES, LLC AND SHOULD NOT BE USED WITHOUT WRITTEN PERMISSION

DIMENSION UNITS	mm
SCALE	20:1
GENERAL TOLERANCES (UNLESS SPECIFIED)	ANGULAR TOL ± °; 4 PLACES ±; 3 PLACES ±; 2 PLACES ±; 1 PLACE ±; 0 PLACES ±
DRAFT WHERE APPLICABLE MUST REMAIN WITHIN DIMENSIONS	
CURRENT REV DESC:	
EC NO:	852989
DRWN: VYSHNC	2025/06/12
CHK'D: MRAMAKRISHNA	2026/04/15
APPR: YNAITO	2026/04/15
INITIAL REVISION:	
DRWN: RYANAIDANI	2016/11/24
APPR: MSASAO	2017/01/27
THIRD ANGLE PROJECTION	
DRAWING	A3-SIZE
SERIES	502078

molex

0.25 PITCH FPC CONN E/O
HGT=1.0 BTM CONTACT TYPE

PRODUCT CUSTOMER DRAWING

DOCUMENT NUMBER	DOC TYPE	DOC PART	REVISION
5020781001	PSD	000	C

MATERIAL NUMBER	CUSTOMER	SHEET NUMBER
SEE SHEET 1	GENERAL	2 OF 2

DOCUMENT STATUS	P1	RELEASE DATE	2026/04/15 10:40:38

FORMAT: master-tb-prod-A3
REVISION: J1
DATE: 2021/05/01