Non-Synchronous PWM Boost Controller for LED Driver

Halogen Free

General Description

The FP7209 is boost topology switching regulator for LED driver. It provides built-in gate driver pin for driving external N-MOSFET. The non-inverting input of error amplifier connects to a 0.25V reference voltage. It has programmable soft start time and switching frequency set by external capacitor and resistor. There are four functions to protect system circuit like UVP, OVP, SCP and OCP. The LED current can be adjusted by an external signal connecting to the DIM pin. DIM pin accepts either a DC voltage or a PWM signal. The PWM signal filter components are contained within the chip. Current mode control and external compensation network make is easy and flexible to stabilize the system.

The FP7209 is available in the small footprint SOP-8L(EP) and TSSOP-14L(EP) packages to fit in space-saving PCB layout for application fields.

Features

- Start-up Voltage: 2.8V
- Wide Supply Voltage Operating Range: 5V to 24V
- Precision Feedback Reference Voltage: 0.25V (Max.)
- Analog and Digital Dimming Control
- Shutdown Current: 6μA (Max.)
- Programmable Switching Frequency: 100KHz~1000KHz
- Programmable Soft Start Function (SS)
- Input Under Voltage Protection (UVP)
- Output Over Voltage Protection (OVP)
- LED Short Circuit Protection (SCP)
- Switching MOSFET Over Current Protection (OCP)
- Over Temperature Protection (OTP)
- Package: SOP-8L(EP), TSSOP-14L(EP)

Applications

- LED Module
- Display Backlight
- Car Lighting
- Portable LED Lighting

This datasheet contains new product information. Advanced Analog Technology reserves the rights to modify the product specification without notice. No liability is assumed as a result of the use of this product. No rights under any patent accompany the sales of the product.

Typical Application Circuit

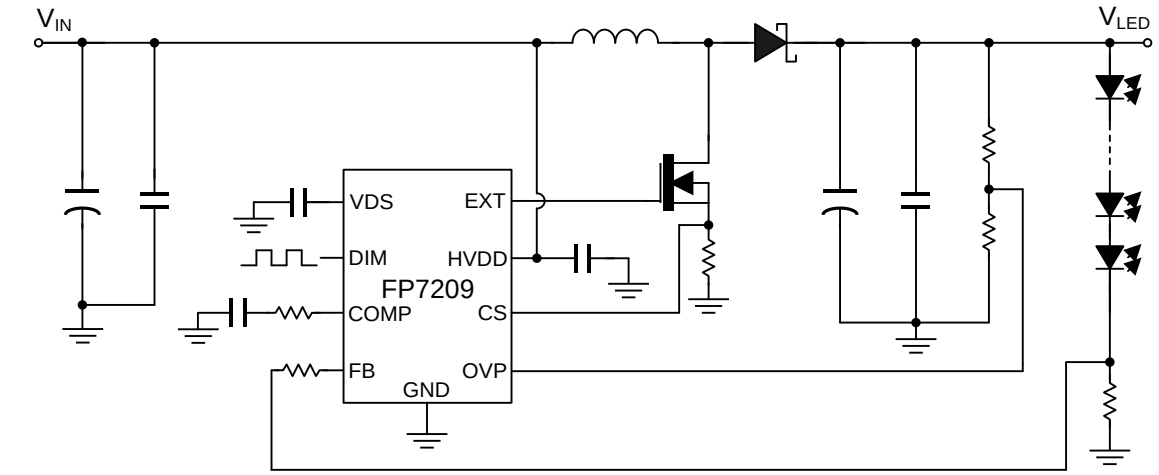

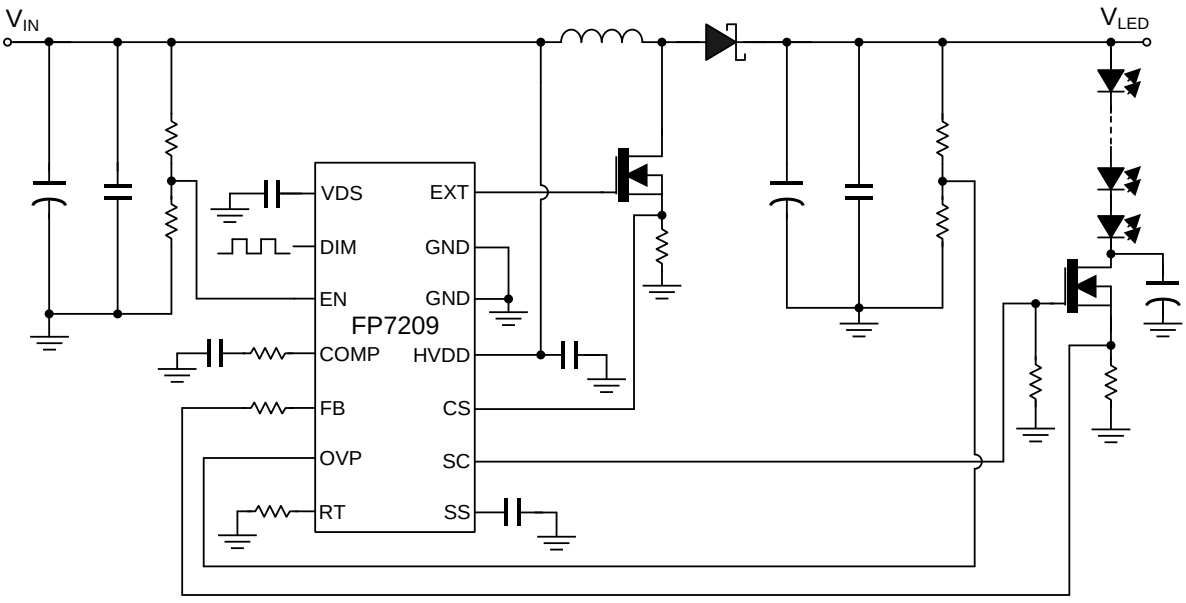

This datasheet contains new product information. Advanced Analog Technology reserves the rights to modify the product specification without notice.No liability is assumed as a result of the use of this product. No rights under any patent accompany the sales of the product.

Function Block Diagram

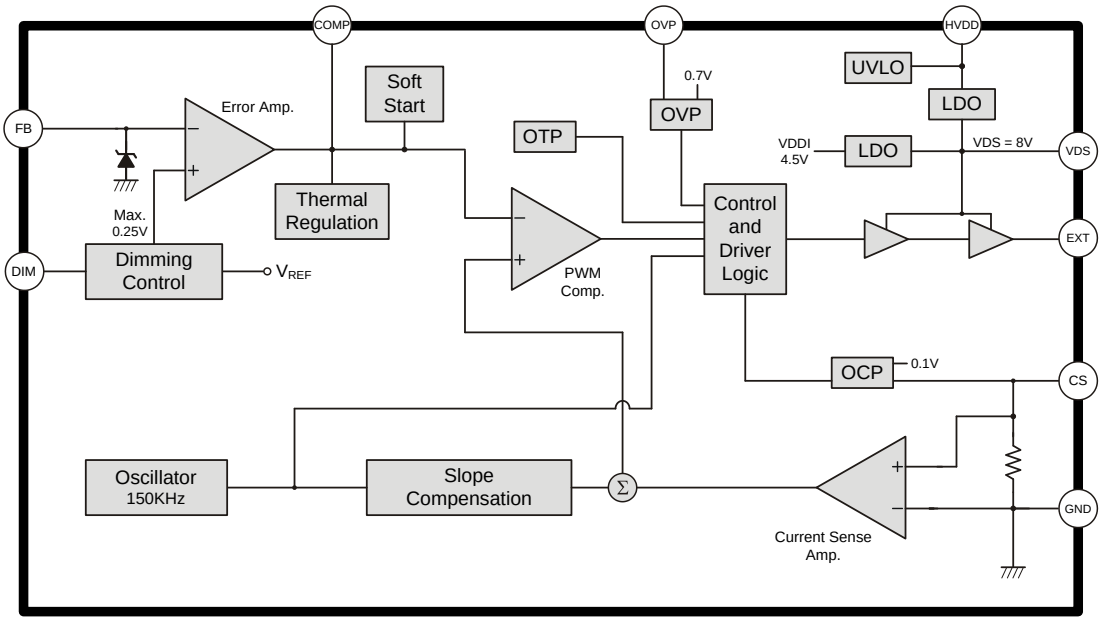

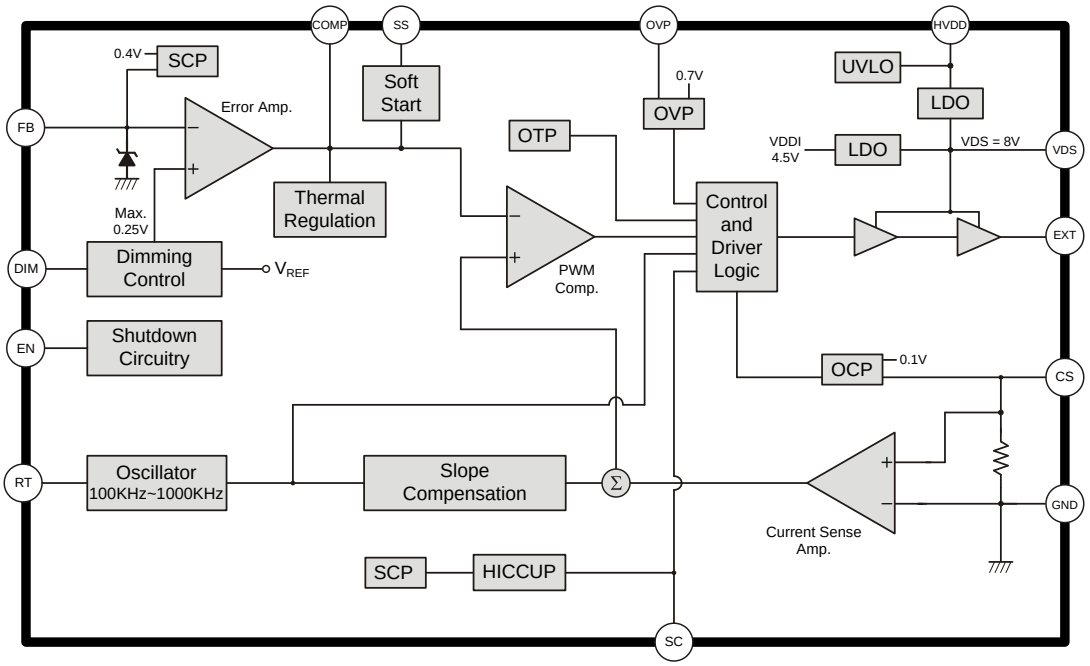

This datasheet contains new product information. Advanced Analog Technology reserves the rights to modify the product specification without notice.No liability is assumed as a result of the use of this product. No rights under any patent accompany the sales of the product.

Pin Descriptions

SOP-8L(EP)

Top View

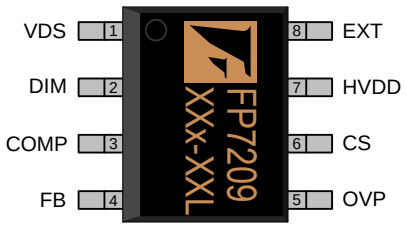

Bottom View

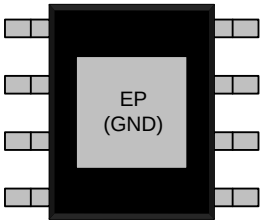

Name	No.	I / O	Description
VDS	1	P	Power Supply for Internal Control Circuits and Gate Drivers
DIM	2	I	Analog and Digital Dimming Control
COMP	3	O	Compensation
FB	4	I	Error Amplifier Inverting Input
OVP	5	I	Over Voltage Protection
CS	6	I	MOSFET Switch Current Sense
HVDD	7	P	IC Power Supply
EXT	8	O	Gate Driver Output
GND	9(EP)	P	IC Ground (Exposed PAD) – Must Connect to Ground

TSSOP-14L(EP)

Top View

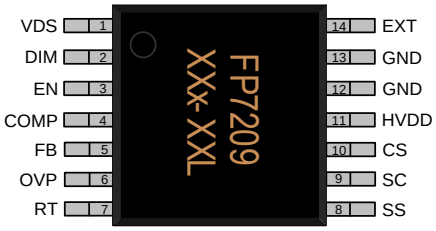

Bottom View

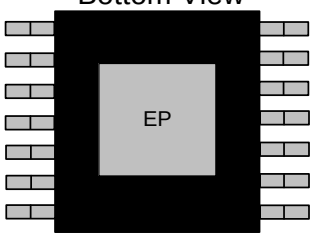

Name	No.	I / O	Description
VDS	1	P	Power Supply for Internal Control Circuits and Gate Drivers
DIM	2	I	Analog and Digital Dimming Control
EN	3	I	Enable Control
COMP	4	O	Compensation
FB	5	I	Error Amplifier Inverting Input
OVP	6	I	Over Voltage Protection
RT	7	I	Frequency Programming
SS	8	I	Soft Start Programming
SC	9	O	LED Short Circuit Control
CS	10	I	MOSFET Switch Current Sense
HVDD	11	P	IC Power Supply
GND	12	P	IC Ground
GND	13	P	IC Ground
EXT	14	O	Gate Driver Output
EP	15	-	Exposed PAD Connect to Ground

This datasheet contains new product information. Advanced Analog Technology reserves the rights to modify the product specification without notice.No liability is assumed as a result of the use of this product. No rights under any patent accompany the sales of the product.

Marking Information

SOP-8L(EP)

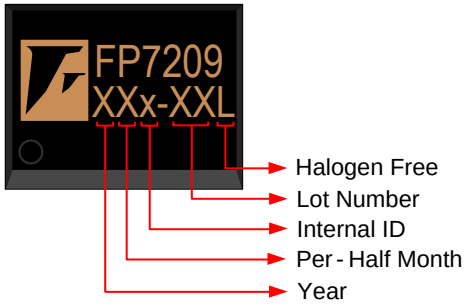

TSSOP-14L(EP)

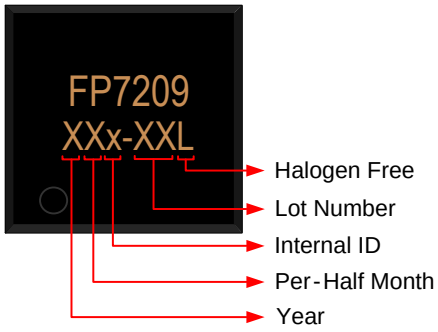

Halogen Free: Halogen free product indicator

Lot Number: Wafer lot number's last two digits

For Example → Lot : 123456 → XXx-56L

Internal ID: Internal Identification Code

Per-Half Month: Production period indicator in half month time unit

For Example : A → First Half Month of January
B → Second Half Month of January
C → First Half Month of February
D → Second Half Month of February

Year: Production year's last digit

This datasheet contains new product information. Advanced Analog Technology reserves the rights to modify the product specification without notice.No liability is assumed as a result of the use of this product. No rights under any patent accompany the sales of the product.

Ordering Information

Part Number	Operating Temperature	Package	MOQ	Description
FP7209XR-G1	-40°C ~ +85°C	SOP-8L(EP)	2500EA	Tape & Reel
FP7209mR-G1	-40°C ~ +85°C	TSSOP-14L(EP)	2500EA	Tape & Reel

Absolute Maximum Ratings

Parameter	Symbol	Conditions	Min.	Typ.	Max.	Unit
Supply Voltage	HVDD	-	-0.3	-	26	V
VDS,SC,EXT Voltage	-	-	-0.3	-	16	V
Others Pin Voltage	-	-	-0.3	-	6	V
Thermal Resistance (Junction to Ambient)	θ_{JA}	SOP-8L(EP)	-	-	+60	°C / W
		TSSOP-14L(EP)	-	-	+55	°C / W
Thermal Resistance (Junction to Case)	θ_{JC}	SOP-8L(EP)	-	-	+10	°C / W
		TSSOP-14L(EP)	-	-	+9	°C / W
Junction Temperature	T_J	-	-	-	+150	°C
Operating Temperature	T_{OP}	-	-40	-	+85	°C
Storage Temperature	T_{ST}	-	-65	-	+150	°C
Lead Temperature	-	(soldering, 10 sec)	-	-	+260	°C

IR Re-flow Soldering Curve

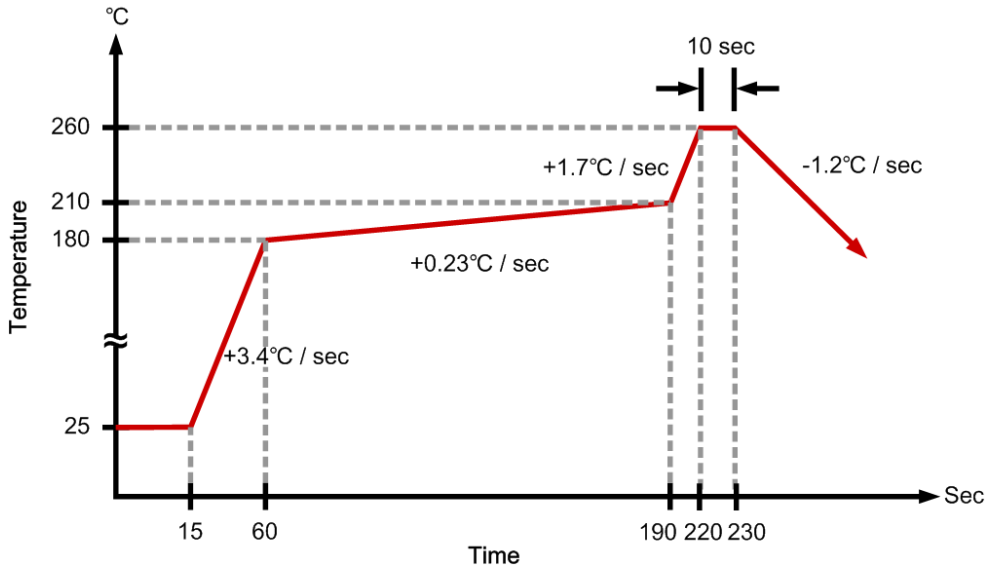

This datasheet contains new product information. Advanced Analog Technology reserves the rights to modify the product specification without notice.No liability is assumed as a result of the use of this product. No rights under any patent accompany the sales of the product.

Recommended Operating Conditions

Parameter	Symbol	Conditions	Min.	Typ.	Max.	Unit
Supply Voltage	HVDD	-	5	-	24	V
Operating Temperature Range	T_A	Ambient Temperature	-40	-	+85	°C

DC Electrical Characteristics (HVDD=12V, T_A=25°C, unless otherwise specified)

Parameter	Symbol	Conditions	Min.	Typ.	Max.	Unit
System Supply Input						
Start-up Voltage	HV_{DD}		2.8			V
Input Supply Range	HV_{DD}		5		24	V
Under Voltage Lockout	V_{UVLO}			2.6		V
UVLO Hysteresis				0.2		V
Average Current	I_{CC}	FB=0V, Switching		2		mA
Quiescent Current	I_{CC}	FB=0.3V, No Switching		800		µA
Shutdown Current	I_{CC}	V_{EN}=0V or V_{DIM}=0V			6	µA
Input Supply Voltage	V_{DS}	HV_{DD}=12V, I_{DS}=0A	7.5	8.0	8.5	V
Oscillator						
Operation Frequency	f_{OSC}	RT=NC	120	150	180	KH_Z
		RT=51KΩ	320	370	420	KH_Z
Maximum Duty Ratio	%	FB=0V		90		%
Soft Start						
Soft-Start bias Current	I_{SS}	V_{ss}=0V		3.5		µA
DIM Voltage						
DIM Start-up Voltage	V_{st_up}	V_{EN}>1.5V, Switching		0.275		V
DIM Shutdown Voltage	V_{DIM}	V_{EN}>1.5V, I_{CC}<6µA	0.05			V
Reference Voltage						
Feedback Voltage	V_{FB}	DIM=2.7V	0.2425	0.250	0.2575	V
		DIM=3V	0.2425	0.250	0.2575	V
		DIM=5V	0.2425	0.250	0.2575	V
Enable Control						
Enable Voltage	V_{EN}		1.42	1.50	1.58	V
Shutdown Voltage	V_{EN}			1.3		V
UVEN Hysteresis				0.2		V
External Transistor Connection current						
EXT Pull-UP Resistance	R_{EXTH}	V_{DS}=8V	0.6	0.9	1.2	Ω
EXT Pull-Down Resistance	R_{EXTL}	V_{DS}=8V	0.6	0.9	1.2	Ω
Over Voltage Protection						
OVP Threshold	V_{OVP}		0.65	0.70	0.75	V

This datasheet contains new product information. Advanced Analog Technology reserves the rights to modify the product specification without notice.No liability is assumed as a result of the use of this product. No rights under any patent accompany the sales of the product.

Parameter	Symbol	Conditions	Min.	Typ.	Max.	Unit
LED Short Circuit Protection						
SCP Threshold	V_{FB}		0.36	0.40	0.44	V
SC Restart Time	t_{SCR}			700		µs
Current Sense Voltage						
Sense Voltage	V_{CS}		85	100	115	mV
Thermal Shutdown						
Thermal Shutdown Threshold	T_{TS}			+150		°C
Thermal Shutdown Threshold Hysteresis	T_{TSH}			30		°C

This datasheet contains new product information. Advanced Analog Technology reserves the rights to modify the product specification without notice.No liability is assumed as a result of the use of this product. No rights under any patent accompany the sales of the product.

Typical Operating Characteristics

(V_{IN}=12V, T_A=25°C, unless otherwise specified)

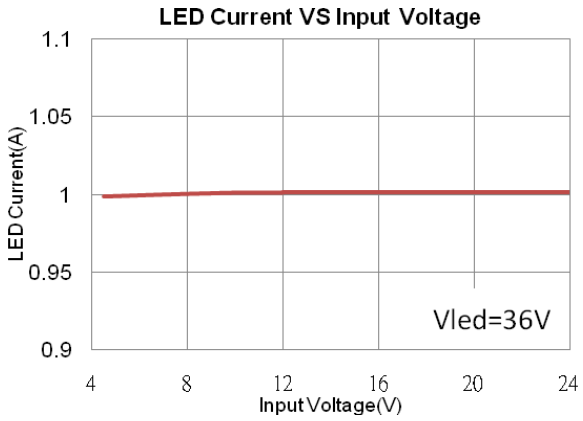

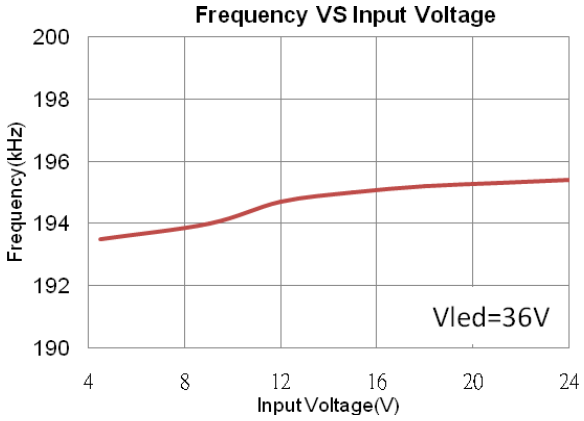

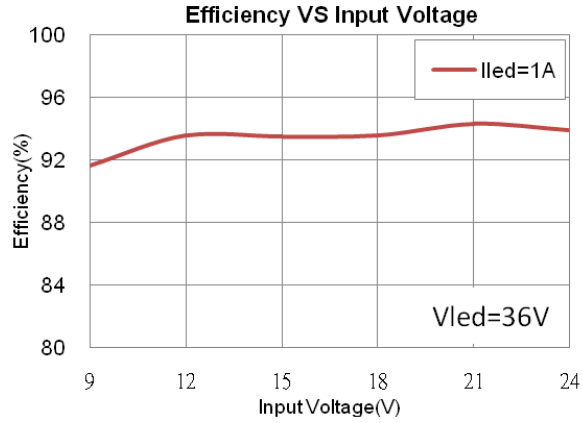

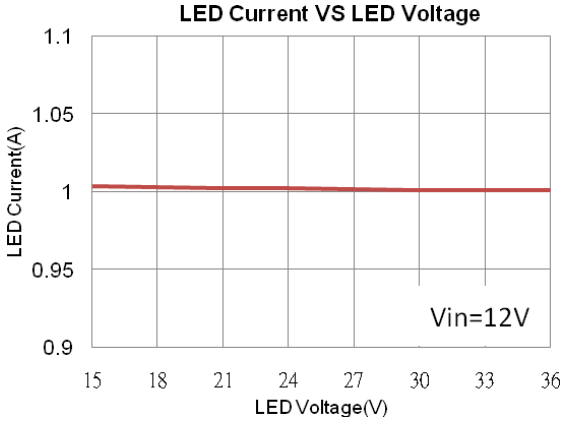

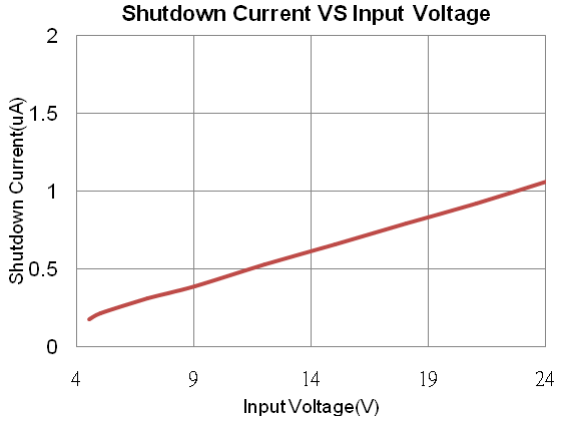

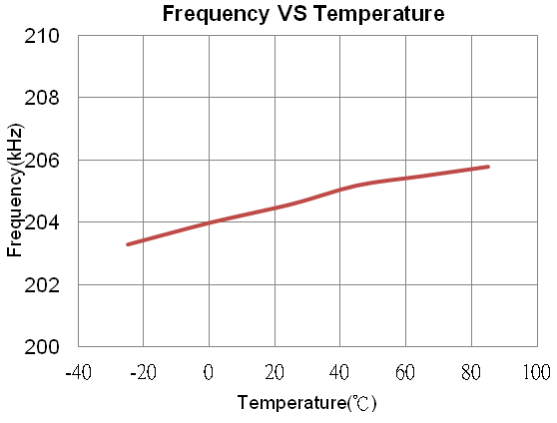

This datasheet contains new product information. Advanced Analog Technology reserves the rights to modify the product specification without notice.No liability is assumed as a result of the use of this product. No rights under any patent accompany the sales of the product.

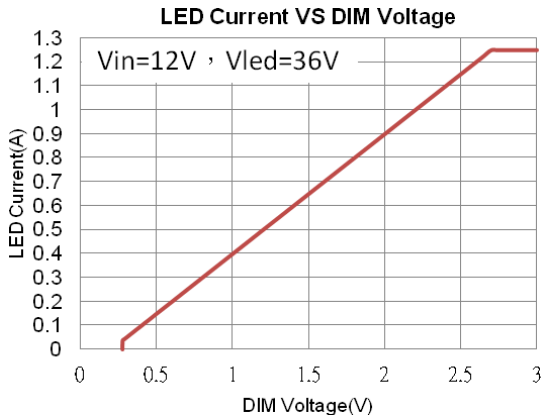

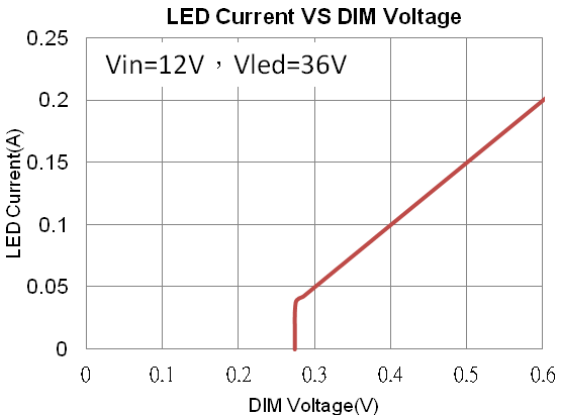

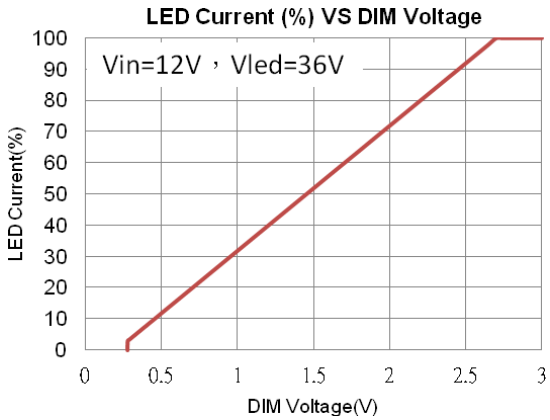

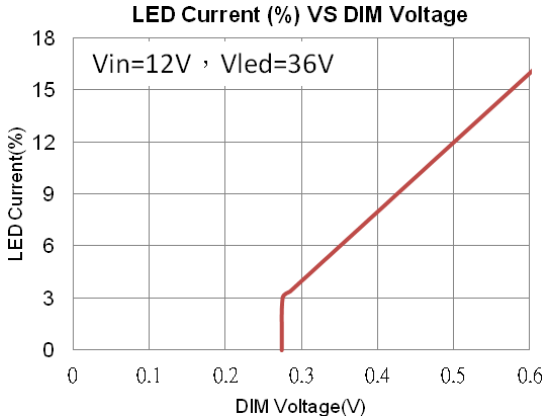

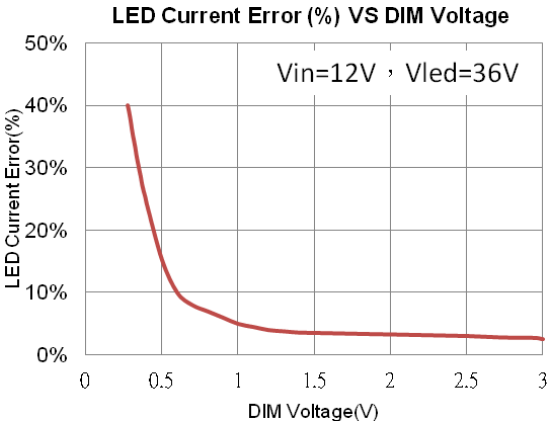

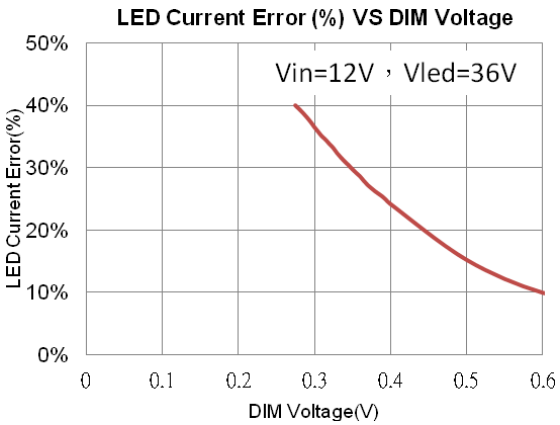

This datasheet contains new product information. Advanced Analog Technology reserves the rights to modify the product specification without notice.No liability is assumed as a result of the use of this product. No rights under any patent accompany the sales of the product.

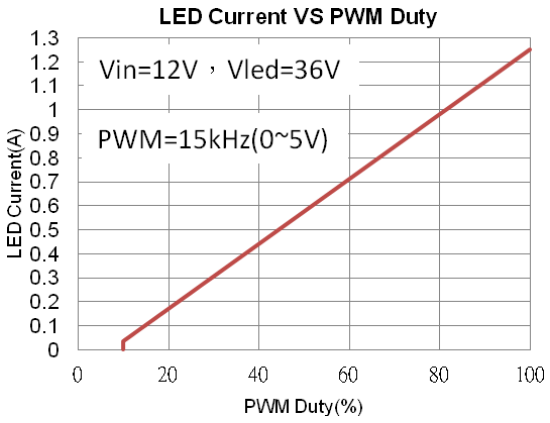

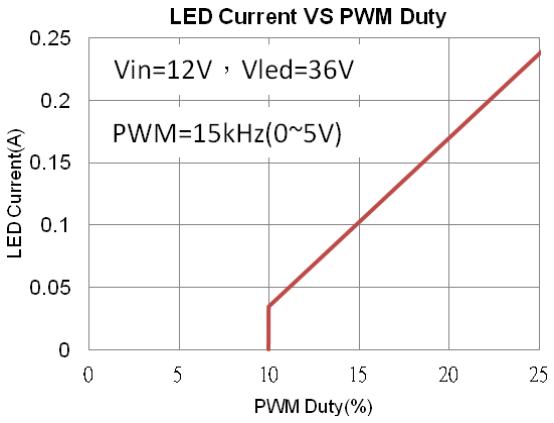

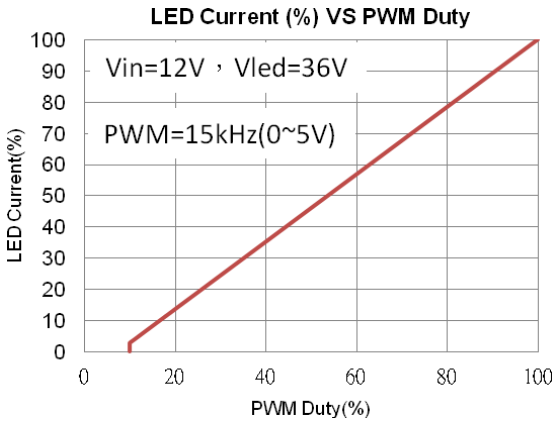

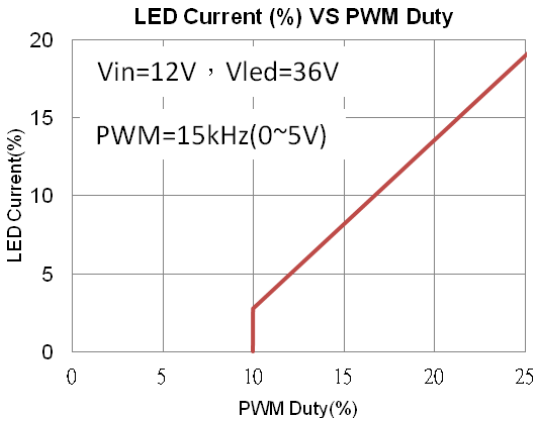

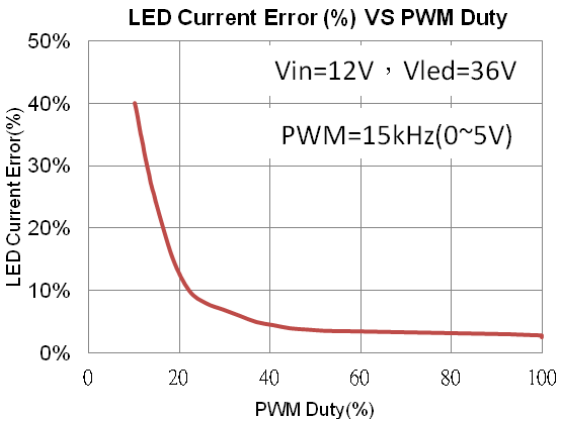

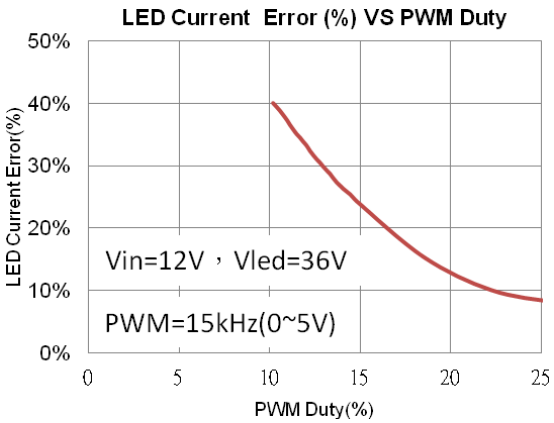

This datasheet contains new product information. Advanced Analog Technology reserves the rights to modify the product specification without notice.No liability is assumed as a result of the use of this product. No rights under any patent accompany the sales of the product.

Power ON From DIM

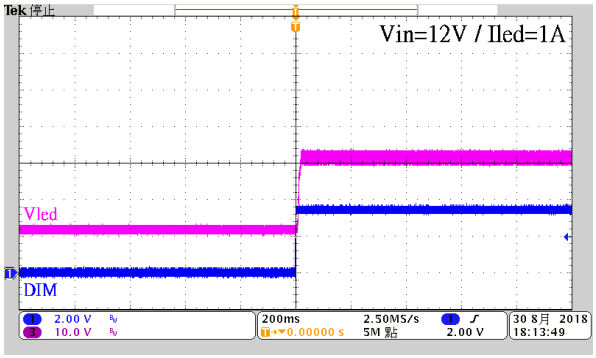

Power OFF From DIM

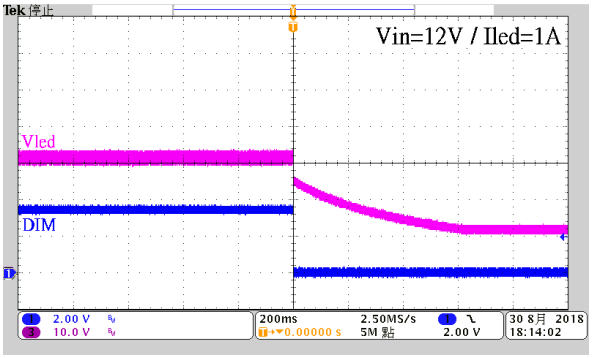

PWM Dimming From DIM

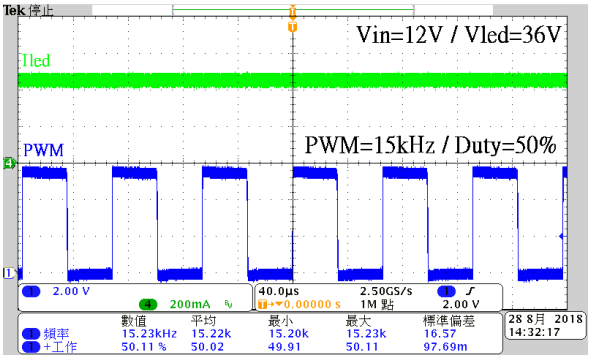

LED Open

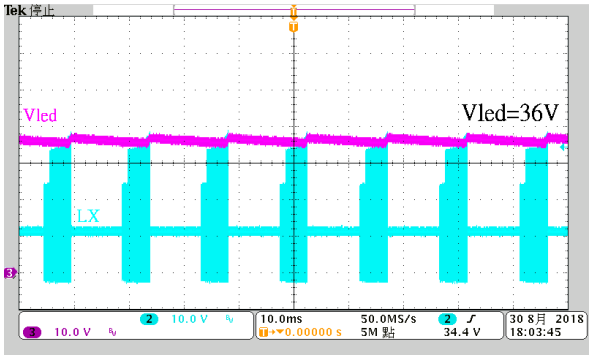

LED Short

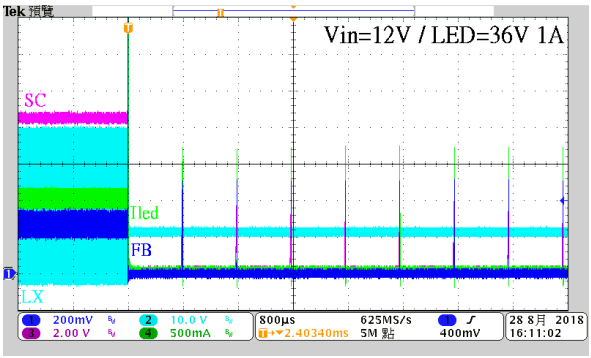

This datasheet contains new product information. Advanced Analog Technology reserves the rights to modify the product specification without notice.No liability is assumed as a result of the use of this product. No rights under any patent accompany the sales of the product.

Function Description

Operation

The FP7209 is current mode boost controller for LED driver, which provides fast transient response; external compensation network is easy and flexible to stabilize the system. FP7209 features a constant frequency, peak current mode control with slope compensation. The internal resistive divider provides 0.25V reference for the error amplifier, low reference voltage can reduce the power dissipation in the current sense resistor. To control DIM pin can achieve PWM and analog dimming of LED current.

Current Sense Control

External switching MOSFET is turned on inductor current flows across the current sense resistor to generate V_{CS}. V_{CS} provides part of current mode control loop. Internal leading-edge blanking is provided to prevent premature turn off the switching MOSFET in each switching cycle.

Current Limit Setting Resistor (R_{CS})

R_{CS} is connected between CS pin and ground, its calculation formula is as below. Where 0.085V is minimum threshold voltage of current sense, ILp is peak inductor current, and the factor 1.3 provides a 30% margin for tolerances.

$$R_{cs}(\Omega) = \frac{0.085V}{ILp(A) \times 1.3}$$

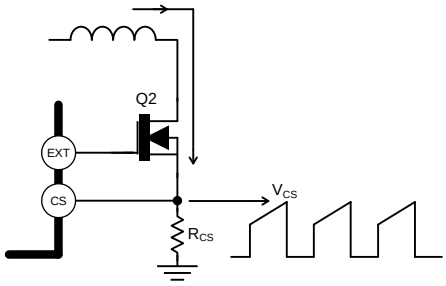

According to following equations calculate the peak inductor current ILp. Where ILavg is the average inductor current, ILpp is the peak-to-peak inductor current, Vout is the LED voltage, Iout(max) is the LED maximum current, Eff is the efficiency, Fs is the switching frequency, and the L is inductance.

$$ILp = ILavg + \frac{ILpp}{2}$$

$$ILavg = \frac{Vout \times Iout(max)}{Vin \times Eff}$$

This datasheet contains new product information. Advanced Analog Technology reserves the rights to modify the product specification without notice.No liability is assumed as a result of the use of this product. No rights under any patent accompany the sales of the product.

$$ILpp = \left\langle \frac{Vin}{Vout} \right\rangle^2 \times \left\langle \frac{Vout - Vin}{Fs \times Iout(max)} \right\rangle \times \left\langle \frac{Eff}{L} \right\rangle \times ILavg$$

Soft Start Function

Soft start time is programmable to connect capacitor between SS pin to ground. After the IC is enabled, the output of error amplifier is clamped by the internal soft-start function, which causes PWM pulse width increasing slowly and thus reducing input surge current during power on. The soft start bias current is 3.5μA.

Oscillator

The oscillator frequency can be set from 100KHz to 1000KHz by external resistance. Acceptable resistance values range from 220KΩ to 17KΩ. The frequency is 150KHz when the resistance is unconnected. The relationship between the timing resistance RT and frequency is shown in Figure1. The oscillator frequency can be calculated using formula below.

$$RT(K\Omega) = \frac{17000}{f_{OSC}(KHz) - 25}$$

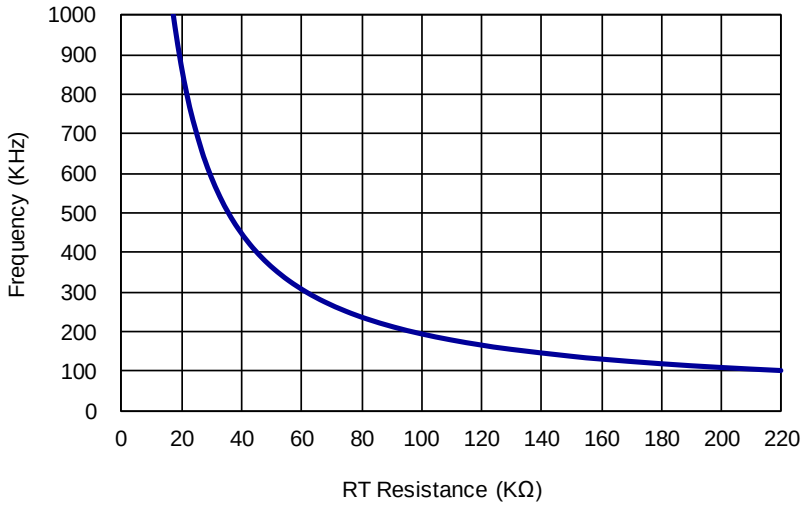

Figure 1. Frequency vs. RT Resistance

Enable Mode / Shutdown Mode

Input voltage connects to EN pin through a resistive divider to set UVLO threshold. FP7209 is enabled when EN voltage greater than 1.5V. The EN voltage is lower than 1.3V to shutdown it. In shutdown mode, to turn off circuitry includes EXT signal, VDS voltage, SC signal, and supply current of HVDD reduces less than 6μA. The EN hysteresis voltage is 0.2V. FP7209 also goes into shutdown

This datasheet contains new product information. Advanced Analog Technology reserves the rights to modify the product specification without notice.No liability is assumed as a result of the use of this product. No rights under any patent accompany the sales of the product.

mode when DIM voltage is lower than 0.05V. HVDD voltage may be lower than 5V, it can't use a resistive divider to set UVLO threshold. For instance, input voltage is from 3V to 4.2V, HVDD pin connects to output 12V, when UVLO is triggered to shut down FP7209, HVDD and output are approximately input voltage. If the applications don't need to set UVLO, the EN connects to input voltage through resistance 200KΩ, and EN internal clamping circuit limit V_{EN} is under 5.5V.

DC Dimming Control

The DC voltage is connected to DIM pin change the voltage to adjust feedback voltage (V_{FB}). The valid range of DIM voltage is from 0.275V to 2.7V then V_{FB} is adjusted from 7.5mV to 250mV (LED Current 3%~100%). The DIM has clamping circuit to limit internal maximum voltage in 2.7V. V_{FB} is still 0.25V even if DIM voltage exceeds 2.7V. The LED current (I_{LED}) is calculated using formula as below.

$$V_{FB} = \frac{V_{DIM} - 0.2V}{10} \quad , \quad I_{LED} = \frac{V_{FB}}{R_S}$$

PWM Dimming Control

The PWM signal is connected to DIM pin changes PWM duty cycle to adjust feedback voltage (V_{FB}). The valid range of PWM duty from 10.2% to 100% then V_{FB} is adjusted from 7.5mV to 250mV (LED Current 3%~100%). The DIM has clamping circuit to limit internal maximum voltage in 2.7V. If dimming PWM voltage exceeds 2.7V, V_{PWM} uses 2.7V to calculate the V_{FB}. The PWM frequency is recommended above 15KHz. The LED current (I_{LED}) is calculated using formula as below.

$$V_{FB} = \frac{V_{PWM} \times Duty - 0.2V}{10} \quad , \quad I_{LED} = \frac{V_{FB}}{R_S}$$

FB Voltage Setting

The DIM connects to input voltage through resistance 200kΩ when applications don't need to dimming control. The FB voltage fixes in 0.25V. The DIM pin can't float in normal operation.

Over Voltage Protection

Use a resistive divider between LED+ and OVP pin to set overvoltage threshold limit. The EXT signal is always turned off when OVP is greater than 0.7V. OVP is lower than 0.7V then EXT signal is turned on immediately, the hysteresis voltage doesn't exist. The voltage (V_{OVP}) can be calculated using following formula.

This datasheet contains new product information. Advanced Analog Technology reserves the rights to modify the product specification without notice.No liability is assumed as a result of the use of this product. No rights under any patent accompany the sales of the product.

$$V_{OVP} = 0.7V \times \left\langle 1 + \frac{R11}{R12} \right\rangle$$

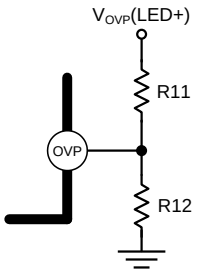

LED Short Protection

If LED string is shorted, this causes high peak current flows across to current sense resistor Rs. The Rs is connected between FB pin and ground. When FB exceeds 0.4V for more than 1μs, SC pulls down to turn off MOSFET Q3 and rest for 700μs. EXT signal is also turned off. FP7209 goes into the hiccup mode. Short path of LED is removed then IC recovers from hiccup mode. The SC of hiccup waveform is shown as below. When LED string is shorted, Q3's drain point produces high surge voltage. C14 electrolytic capacitor connects from Q3's drain to ground to suppress surge voltage, it can avoid Q3 damage. Electrolytic capacitor 1μF is recommended, and circuitry is as bleow.

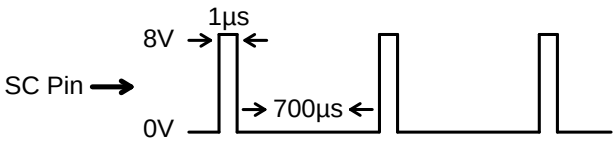

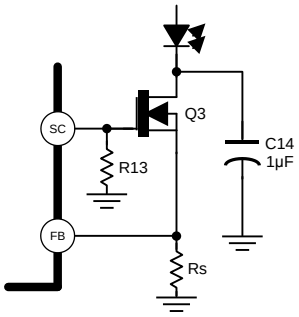

Thermal Shutdown Protection

The IC will shut down automatically when the internal junction temperature exceeds +150°C. The device can restart until the junction temperature drops below +120°C approximately.

This datasheet contains new product information. Advanced Analog Technology reserves the rights to modify the product specification without notice.No liability is assumed as a result of the use of this product. No rights under any patent accompany the sales of the product.

Application Information

Inductor Selection

The Inductance value is decided based on different condition. 4.7µH to 68uH inductance value is recommended for general application circuit. There are three important inductor specifications, DC resistance, saturation current and core loss. Low DC resistance has better power efficiency. The inductance is calculated using formula. Where Vout is LED string voltage, Fs is switching frequency, Iout is LED maximum current, Eff is boost efficiency and r is the ratio of the inductor peak-to-peak ripple current to the average DC inductor current at full load current. r is recommended between 0.3 and 0.5.

$$L = \left\langle \frac{Vin}{Vout} \right\rangle^2 \times \left\langle \frac{Vout - Vin}{Fs \times Iout(max)} \right\rangle \times \left\langle \frac{Eff}{r} \right\rangle$$

Capacitor Selection

The output capacitor is required to maintain the DC voltage during switching. Low ESR capacitors are preferred to reduce the output voltage ripple. Ceramic capacitor of X5R and X7R are recommended, which have low equivalent series resistance (ESR) and wider operation temperature range.

Diode Selection

Schottky diodes with fast recovery times and low forward voltages are recommended. Ensure the diode average and peak current rating exceed the average output current and peak inductor current. In addition, the diode's reverse breakdown voltage must exceed the output voltage.

LED Current Programming

The LED current is set by a resistor from the FB pin to ground. The LED current is:

$$I_{LED} = \frac{V_{FB}}{R_S}$$

Layout Considerations

1. The power traces, consisting of the GND trace, the Q2 MOS drain to R_{CS} trace, V_{IN} and V_{OUT} trace should be kept short, direct and wide.
2. Layout switching node Q2 MOS drain, inductor and schottky diode connection traces wide and short to reduce EMI.

This datasheet contains new product information. Advanced Analog Technology reserves the rights to modify the product specification without notice.No liability is assumed as a result of the use of this product. No rights under any patent accompany the sales of the product.

3. Place C6 nearby HVDD as closely as possible to maintain input voltage steady and filter noise.
4. The sense resistor R_S must be connected between FB and GND pin as closely as possible.
5. FB is a sensitive node. Please keep it away from switching node, Q2 MOS drain.
6. R11 and R12 must be connected close to OVP and GND pin.
7. R_{CS} must be connected close to CS and GND pin.
8. Output capacitor C7, C8 should be connected close and together directly to the ground of R_{CS}.
9. The GND of the R_{CS}, C1, C2, C7 and C8 should be connected close and together directly to a ground plane.

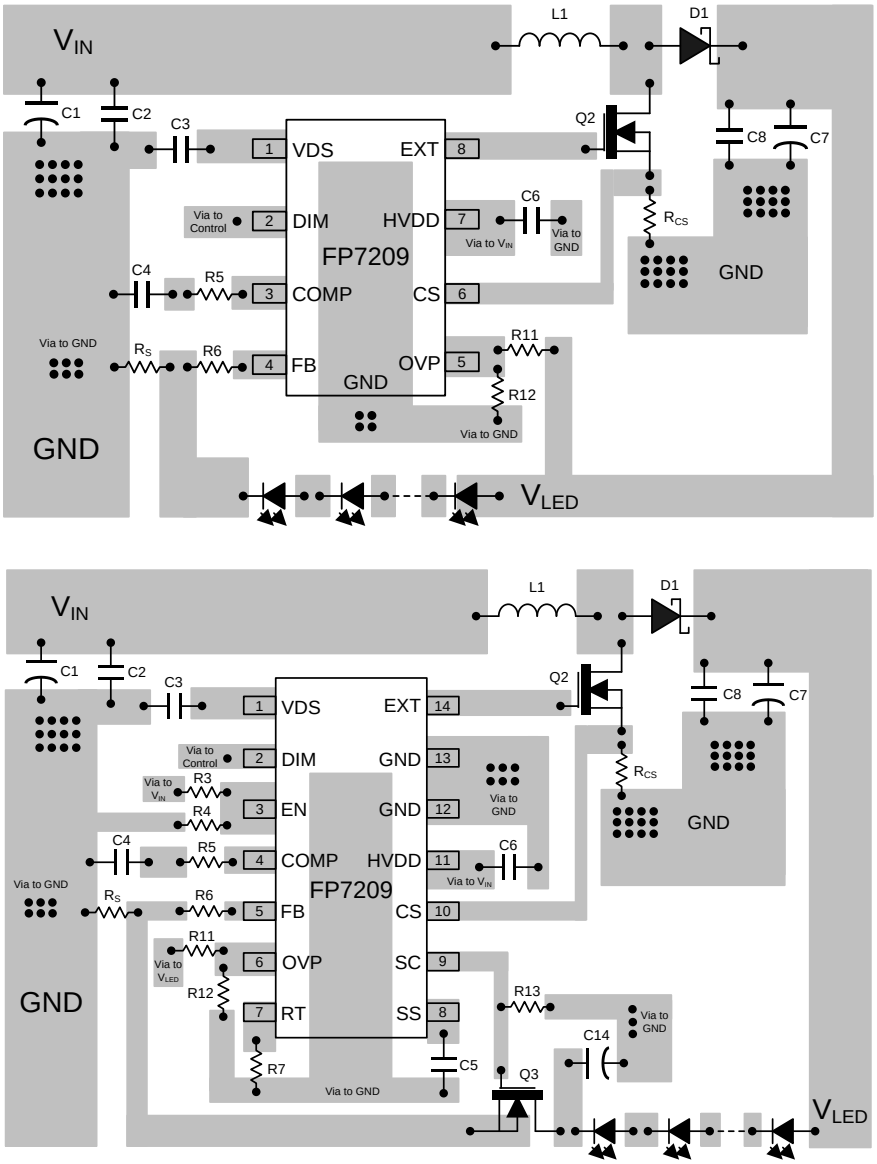

Suggested Layout

This datasheet contains new product information. Advanced Analog Technology reserves the rights to modify the product specification without notice.No liability is assumed as a result of the use of this product. No rights under any patent accompany the sales of the product.

Typical Application

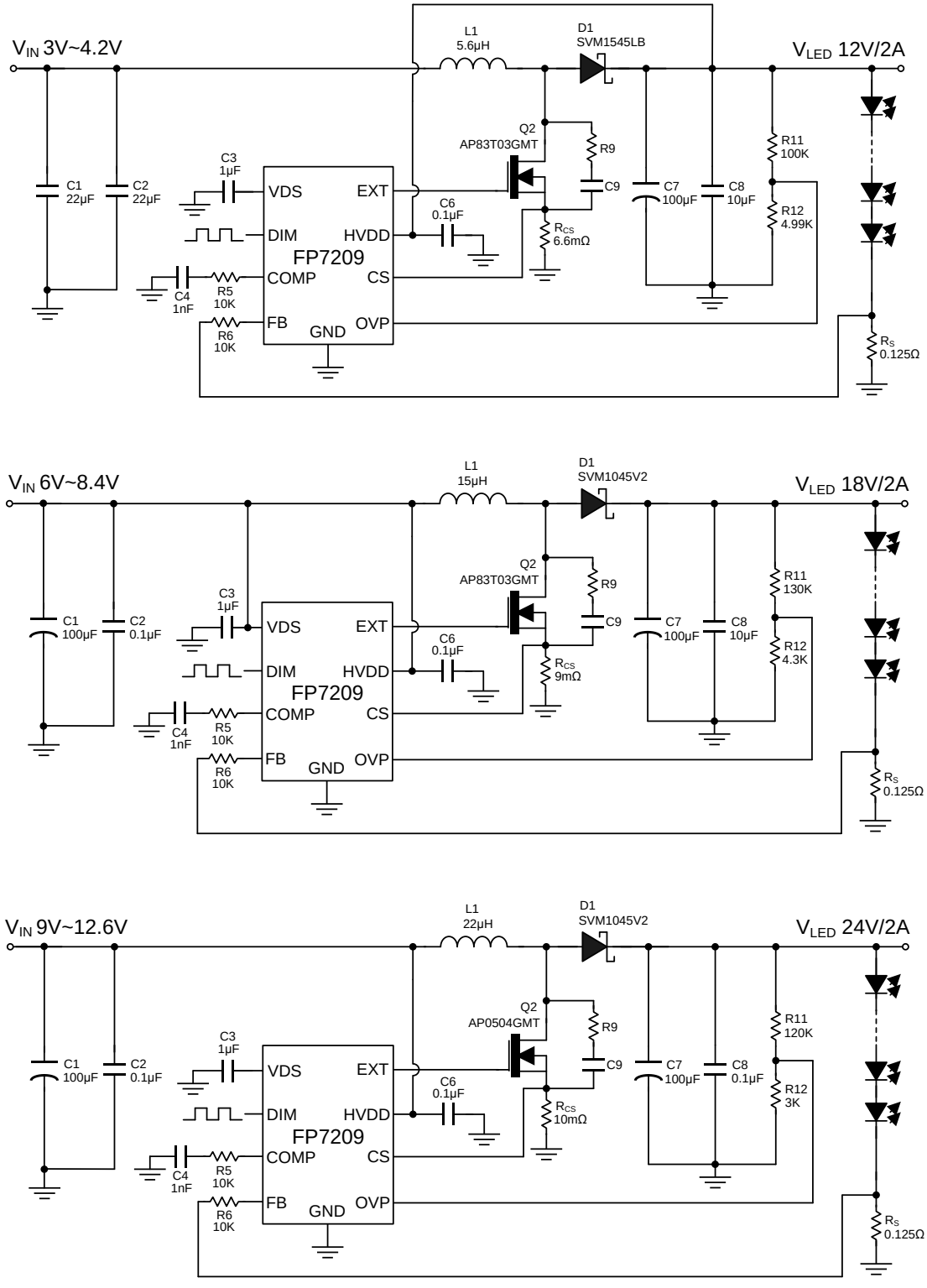

This datasheet contains new product information. Advanced Analog Technology reserves the rights to modify the product specification without notice.No liability is assumed as a result of the use of this product. No rights under any patent accompany the sales of the product.

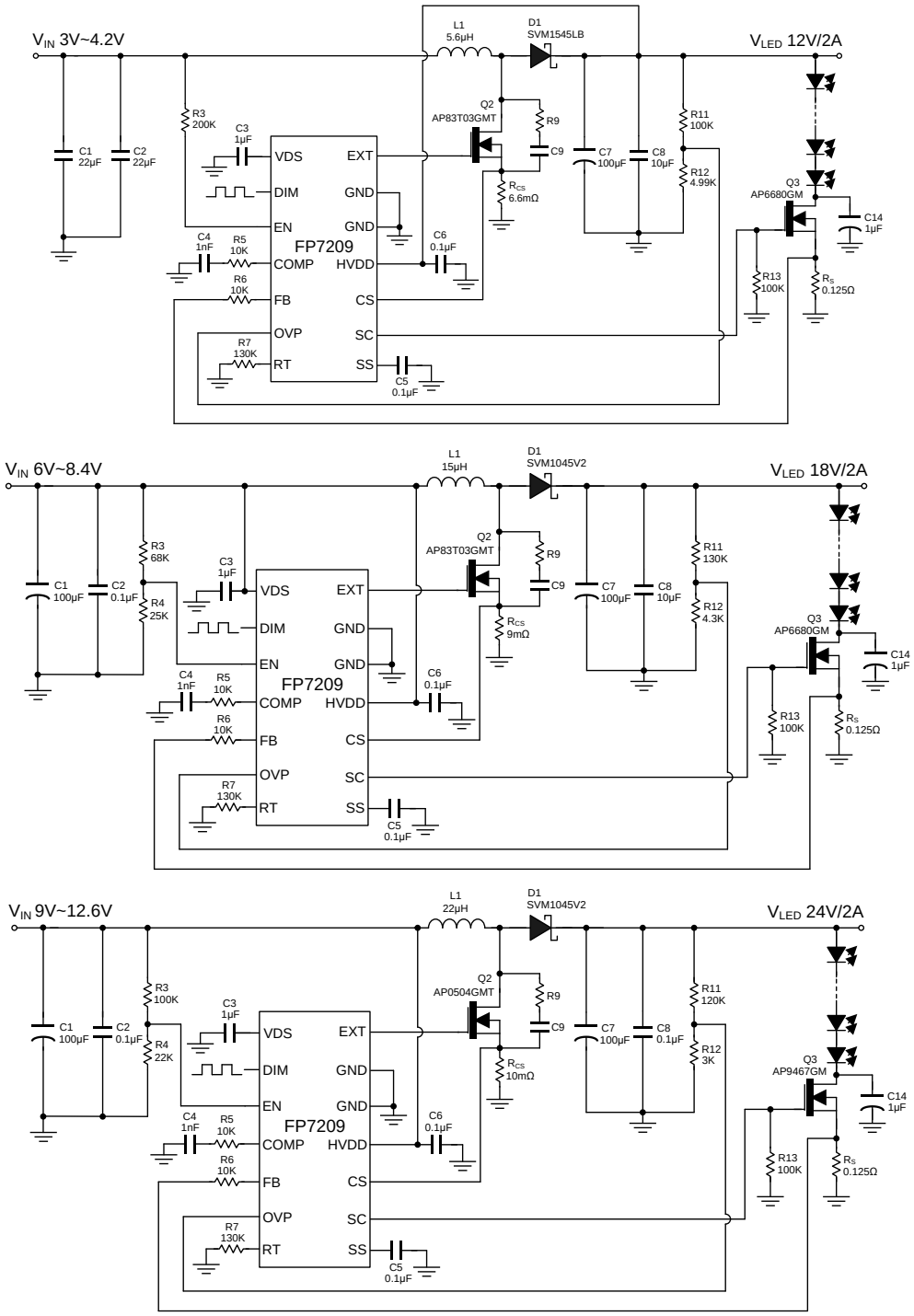

Note:

1. The X5R and X7R of ceramic capacitors are recommended to choose.
2. R9 and C9 are added for reducing EMI (Electromagnetic Interference).
3. Vin is from 3V to 4.2V, it can't use a resistive divider R3/R4 to set UVLO threshold.
4. Don't control FB pin to adjust LED current when V_{IN} is less than 5V. Dimming controls DIM pin the initial PWM duty cycle is over 13% (LED Current 6%) if V_{IN} is less than 5V.

This datasheet contains new product information. Advanced Analog Technology reserves the rights to modify the product specification without notice.No liability is assumed as a result of the use of this product. No rights under any patent accompany the sales of the product.

Package Outline

SOP-8L (EP)

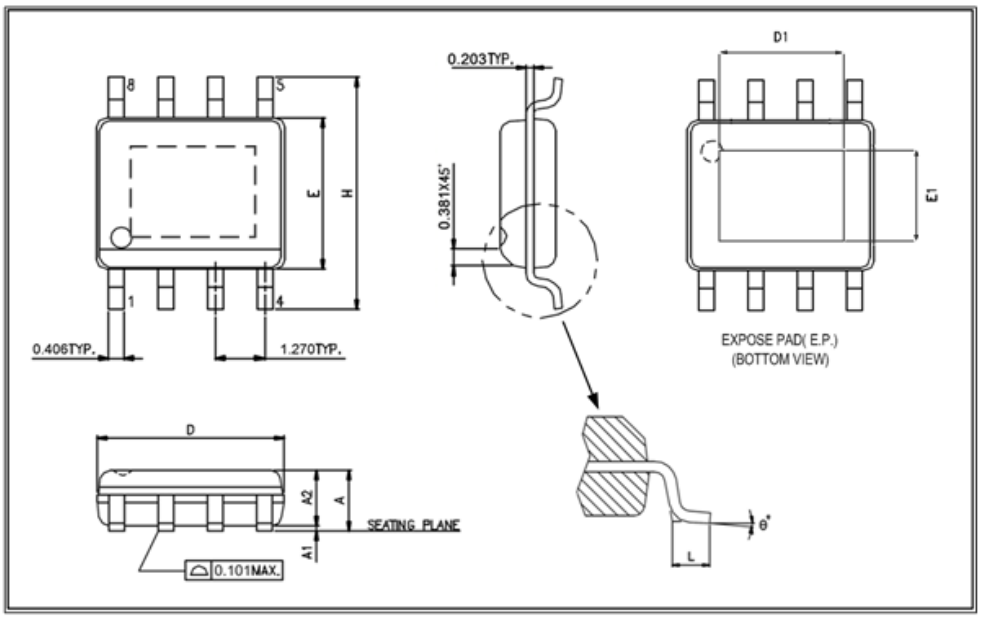

UNIT: mm

Symbols	Min. (mm)	Max. (mm)
A	1.30	1.70
A1	0	0.15
A2	1.25	1.55
D	4.70	5.10
E	3.80	4.00
H	5.80	6.20
L	0.40	1.27

Exposed PAD Dimensions:

Symbols	Min. (mm)	Max. (mm)
D1	2.60	3.45
E1	1.90	2.56

Note:

1. Package dimensions are in compliance with JEDEC outline: MS-012 AA.
2. Dimension ”D” does not include molding flash, protrusions or gate burrs.
3. Dimension “E” does not include inter-lead flash or protrusions.

This datasheet contains new product information. Advanced Analog Technology reserves the rights to modify the product specification without notice.No liability is assumed as a result of the use of this product. No rights under any patent accompany the sales of the product.

TSSOP-14L(EP)

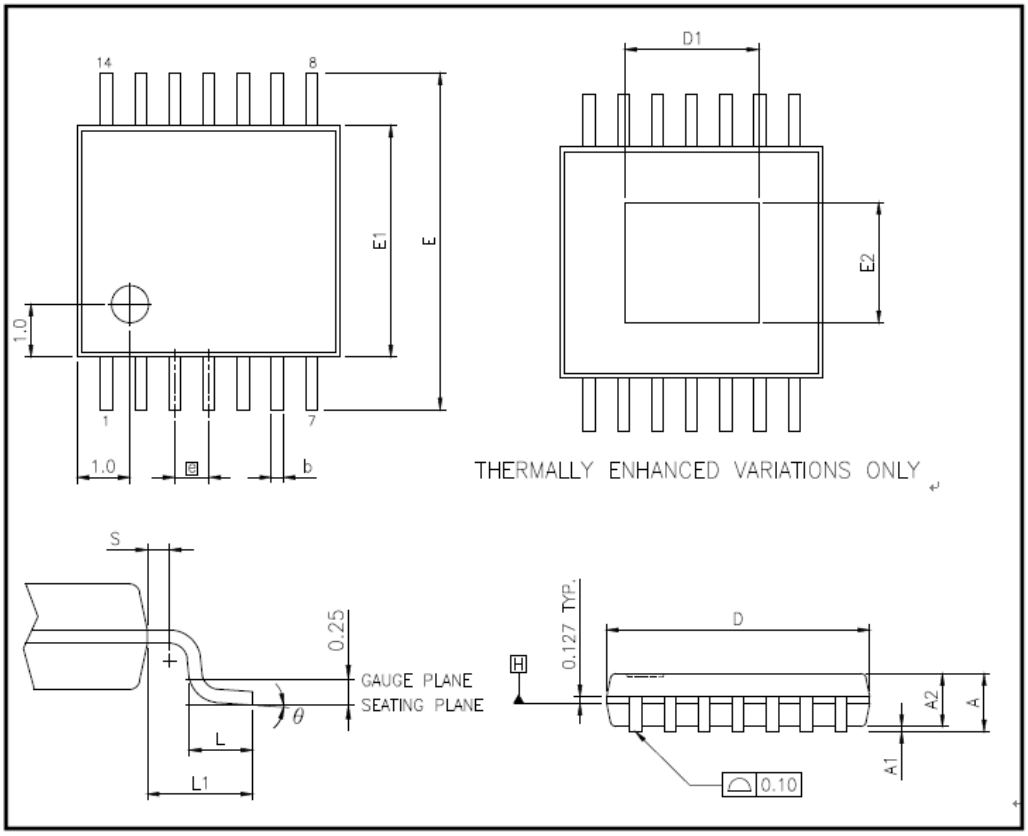

UNIT: mm

Symbols	Min. (mm)	Nom.(mm)	Max. (mm)
A	-	-	1.20
A1	0.00	-	0.15
A2	0.80	1.00	1.05
b	0.19	-	0.30
D	4.90	5.00	5.10
E1	4.30	4.40	4.50
E	6.40 BSC		
e	0.65 BSC		
L1	1.00 REF		
L	0.50	0.60	0.75
S	0.20	-	-
θ	0°	-	8°

This datasheet contains new product information. Advanced Analog Technology reserves the rights to modify the product specification without notice.No liability is assumed as a result of the use of this product. No rights under any patent accompany the sales of the product.

Exposed PAD Dimensions:

Symbols	Min. (mm)	Max. (mm)
E2	2.55	3.15
D1	2.64	3.25

Note:

1. All dimensions are in millimeters.
2. Dimension ”D” does not include mold flash, protrusions or gate burrs. Mold flash,protrusions or gate burrs shall not exceed 0.15 pre side.
3. Dimension ”E1” does not include interlead flash or protrusion. Interlead flash or protrusion shall not exceed 0.25 pre side.
4. Dimension ”b” does not include interlead dambar protrusion. Allowable dambar protrusion shall be 0.08mm total in excess of the ”b” dimension at maximum material condition. Dambar cannot be located on the lower radius of the foot. Minimum space between protrusion and adjacent lead is 0.07mm.
5. Dimension ”D” and ”E1” to be determined at datum plane.

This datasheet contains new product information. Advanced Analog Technology reserves the rights to modify the product specification without notice.No liability is assumed as a result of the use of this product. No rights under any patent accompany the sales of the product.