282A, 30V N-CHANNEL MOSFET

DESCRIPTION

SVG030R7NL5 is an N-channel enhancement mode power MOS field effect transistor which is produced using Silan's LVMOS technology. The improved process and cell structure have been especially tailored to minimize on-state resistance, provide superior switching performance.

This device is widely used in power management for UPS and Inverter Systems.

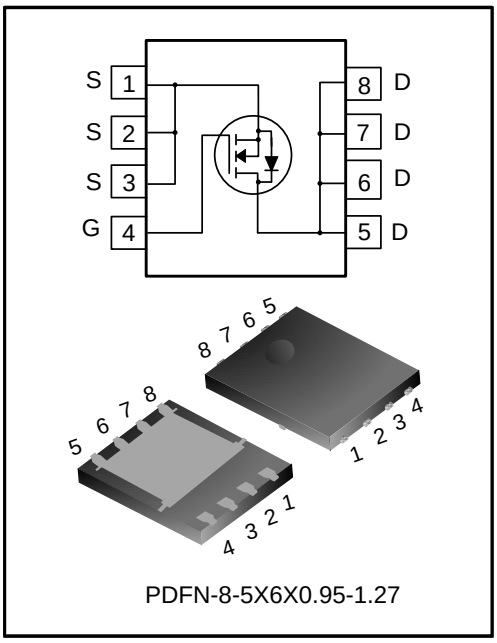

PDFN-8-5X6X0.95-1.27

FEATURES

- 282A, 30V, $R_{DS(on)(typ.)}$=0.55mΩ@V_{GS}=10V
- Low gate charge
- Low Crss
- Fast switching
- Extreme dv/dt rated
- 100% avalanche tested
- Pb-free lead plating
- RoHS compliant

KEY PERFORMANCE PARAMETERS

Characteristics	Ratings	Unit
V_{DS}	30	V
$V_{GS(th)}$	1.3~2.3	V
$R_{DS(on),max.}$	0.7	mΩ
I_D	282	A
$Q_{g.typ.}$	122	nC

ORDERING INFORMATION

Part No.	Package	Marking	Hazardous Substance Control	Packing Type
SVG030R7NL5TR	PDFN-8-5X6X0.95-1.27	030R7NL5	Halogen free	Tape&Reel

ABSOLUTE MAXIMUM RATINGS (UNLESS OTHERWISE NOTED, T_J=25°C)

Characteristics	Symbol	Test conditions	Ratings			Unit
			Min.	Typ.	Max.	
Drain-source Voltage	V_{DS}	--	30	--	--	V
Gate-source Voltage	V_{GS}	--	-20	--	20	V
Drain Current (Note 1)	I_D	T_C=25°C	--	--	282	A
		T_C=100°C	--	--	178	
Drain Current Pulsed (Note 2)	I_{DM}	T_C=25°C	--	--	1128	A
Power Dissipation (Note 3)	P_D	T_C=25°C	--	--	139	W
Single Pulsed Avalanche Energy	E_{AS}	L=0.1mH, V_{DD}=24V, R_G=25Ω, starting temperature T_J=25°C	--	--	135	mJ
Single Pulsed Current	I_{AS}	--	--	--	52	A
Operation Junction Temperature Range	T_J	--	-55	--	150	°C
Storage Temperature Range	T_{stg}	--	-55	--	150	°C

THERMAL CHARACTERISTICS

Characteristics	Symbol	Test conditions	Ratings			Unit
			Min.	Typ.	Max.	
Thermal Resistance, Junction-case, Bottom	$R_{\theta JC}$	--	--	--	0.9	°C/W
Thermal Resistance, Junction-ambient	$R_{\theta JA}$	--	--	--	50	°C/W
Soldering Temperature(SMD)	T_{sold}	Reflow soldering:10±1sec, 3times	--	--	260	°C

ELECTRICAL CHARACTERISTICS (UNLESS OTHERWISE NOTED, T_J=25°C)

Static characteristics

Characteristics	Symbol	Test conditions	Ratings			Unit
			Min.	Typ.	Max.	
Drain-source Breakdown Voltage	BV_{DSS}	V_{GS}=0V, I_D=250μA	30	--	--	V
Drain-source Leakage Current	I_{DSS}	V_{DS}=30V, V_{GS}=0V, T_J=25°C	--	--	1.0	μA
		V_{DS}=30V, V_{GS}=0V, T_J=125°C	--	2.5	--	
Gate-source Leakage Current	I_{GSS}	V_{GS}=±20V, V_{DS}=0V	--	--	±100	nA
Gate Threshold Voltage	$V_{GS(th)}$	V_{GS}=V_{DS}, I_D=250μA	1.3	--	2.3	V
Static Drain-source On State Resistance	$R_{DS(on)}$	V_{GS}=10V, I_D=30A	--	0.55	0.7	mΩ
Gate Resistance	R_g	f=1MHz	--	1.6	--	Ω

Dynamic characteristics

Characteristics	Symbol	Test conditions	Ratings			Unit
			Min.	Typ.	Max.	
Input Capacitance	C_{iss}	f=1MHz, V_{GS}=0V, V_{DS}=15V	--	9045	--	pF
Output Capacitance	C_{oss}		--	5394	--	
Reverse Transfer Capacitance	C_{rss}		--	294	--	
Turn-on Delay Time	$t_{d(on)}$	V_{DD}=20V, V_{GS}=10V, R_G=3.0Ω, I_D=20A (Notes 4, 5)	--	26	--	ns
Turn-on Rise Time	t_r		--	70	--	
Turn-off Delay Time	$t_{d(off)}$		--	105	--	
Turn-off Fall Time	t_f		--	31	--	
Total Gate Charge	Q_g	V_{DD}=15V, V_{GS}=10V, I_D=45A (Notes 4, 5)	--	122	--	nC
Gate-source Charge	Q_{gs}		--	37	--	
Gate-drain Charge	Q_{gd}		--	7.7	--	
Gate-plateau Voltage	$V_{plateau}$		--	4.0	--	V

Reverse diode characteristics

Characteristics	Symbol	Test conditions	Ratings			Unit
			Min.	Typ.	Max.	
Continuous Diode Forward Current	I_S	Integral reverse P-N junction diode in the MOSFET	--	--	282	A
Diode Pulse Current	$I_{S,pulse}$		--	--	1128	
Diode Forward Voltage	V_{SD}	I_S=60A, V_{GS}=0V	--	--	1.4	V
Reverse Recovery Time	T_{rr}	I_S=13.5A, V_{GS}=0V, V_R=30V, dI_F/dt=100A/μs (Note 4)	--	101	--	ns
Reverse Recovery Charge	Q_{rr}		--	174	--	nC

Notes:

1. The rated value only refers to the maximum absolute value at the case temperature of 25°C in the specification. If the case temperature is higher than 25°C, it should be derated according to the actual environmental conditions;
2. Pulse time 5μs, pulse width is limited by the maximum junction temperature;
3. The dissipation power will change with temperature, derating above 25°C: 1.11W/°C;
4. Pulse Test: Pulse width ≤300μs, Duty cycle≤2%;
5. Essentially independent of operating temperature.

TYPICAL CHARACTERISTICS

Figure 1. On-Region Characteristics

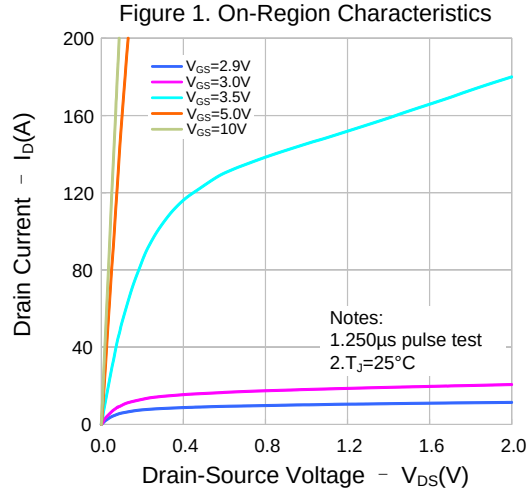

Figure 2. Transfer Characteristics

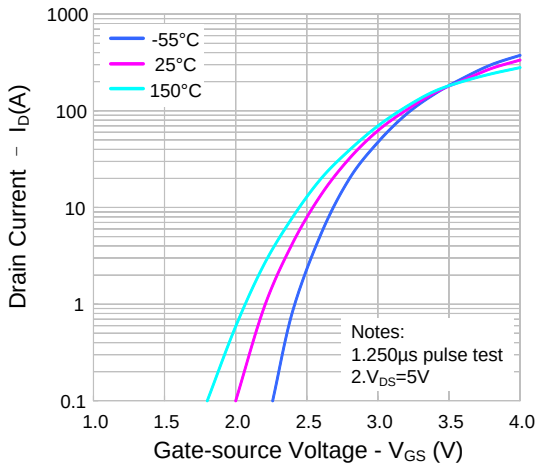

Figure 3. On-resistance vs. Drain Current

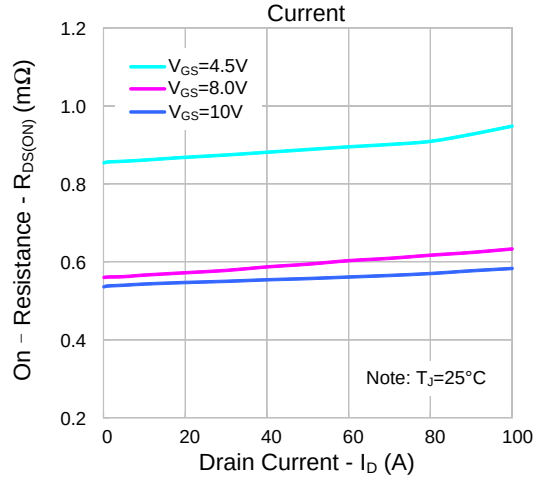

Figure 4. On-resistance vs. Gate-source Voltage

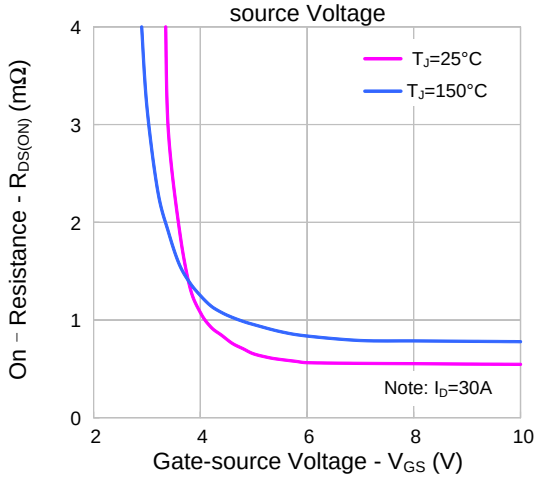

Figure 5. Turn-on Voltage vs. Temperature characteristics

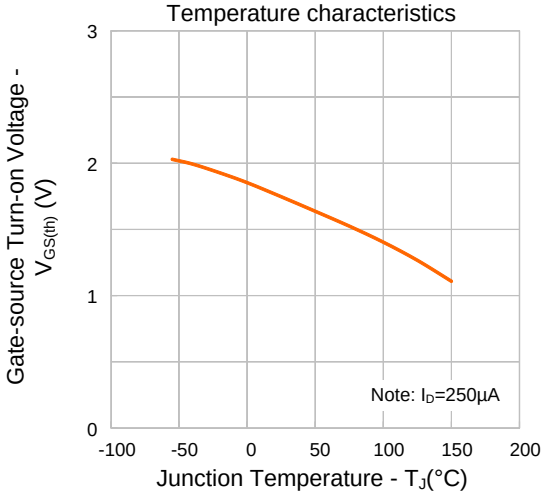

Figure 6. Body Diode Forward Voltage Variation vs. Source Current and Temperature

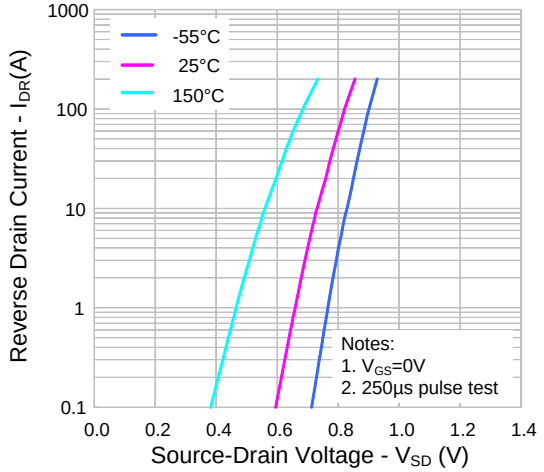

TYPICAL CHARACTERISTICS (CONTINUED)

Figure 7. Capacitance Characteristics

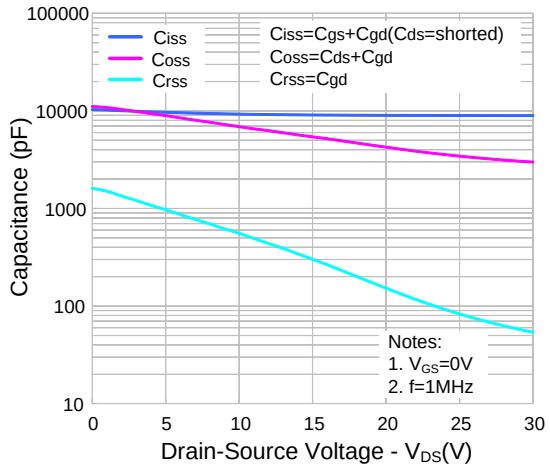

Figure 8. Gate Charge

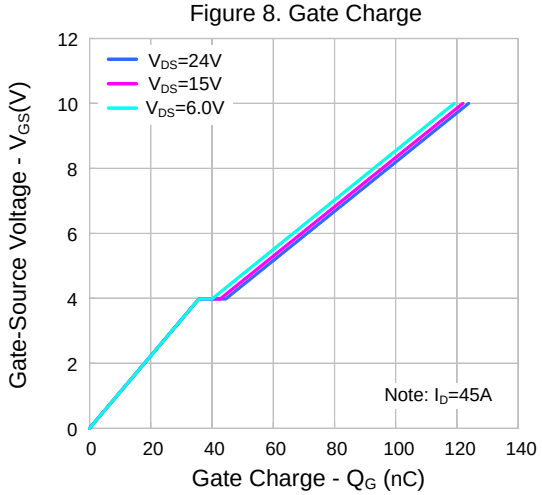

Figure 9. Breakdown Voltage Variation vs. Temperature

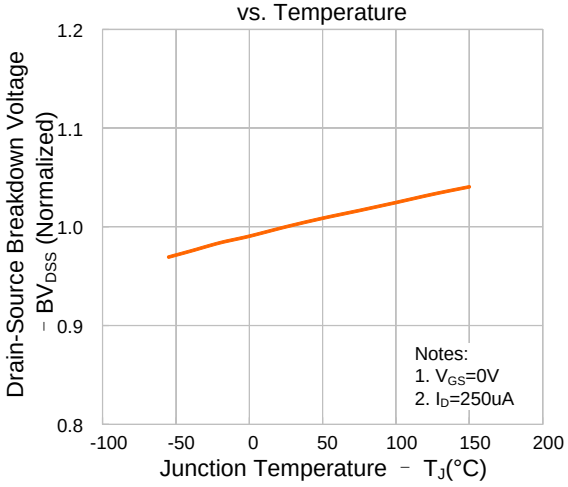

Figure 10. On-resistance Variation vs. Temperature

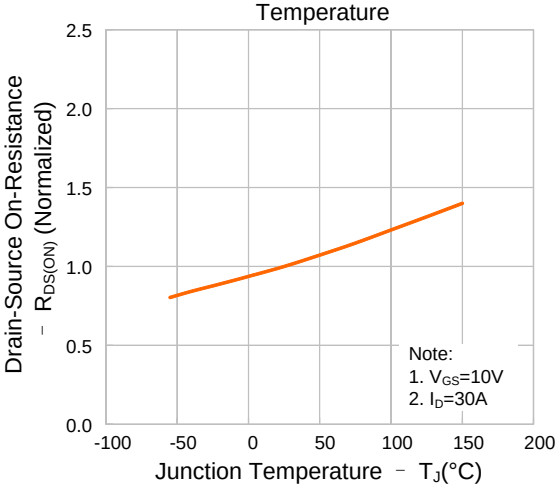

Figure 11. Max. Safe Operating Area

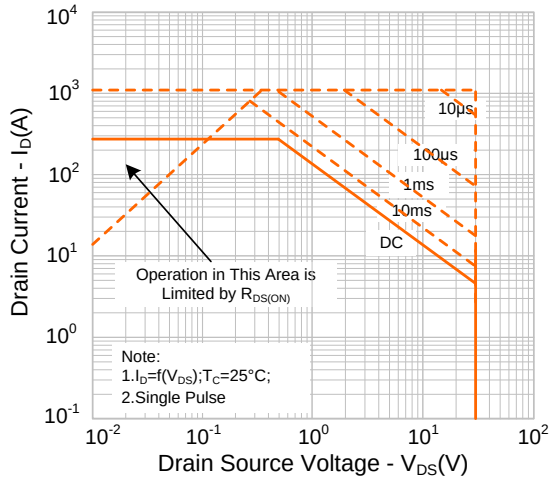

Figure 12. Power Dissipation vs. Case Temperature

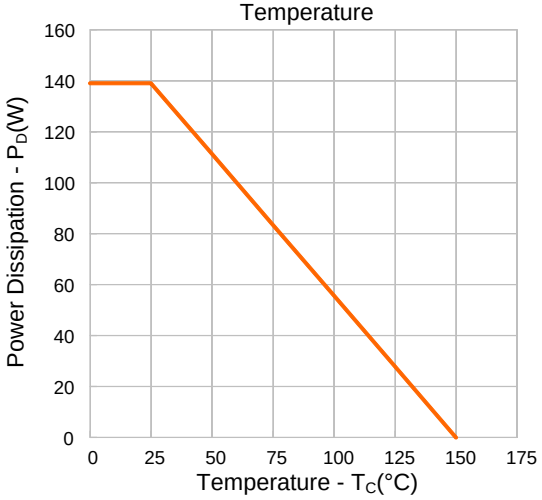

TYPICAL CHARACTERISTICS (CONTINUED)

Figure13. Drain Current vs. Case Temperature

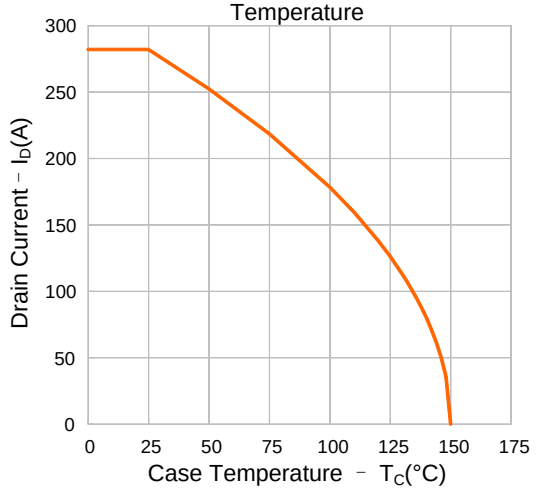

Figure 14. Transient Thermal Impedance vs. On-pulse Duration

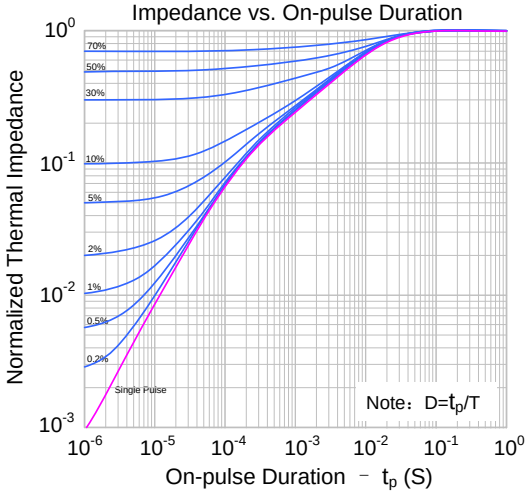

TYPICAL TEST CIRCUIT

Gate Charge Test Circuit & Waveform

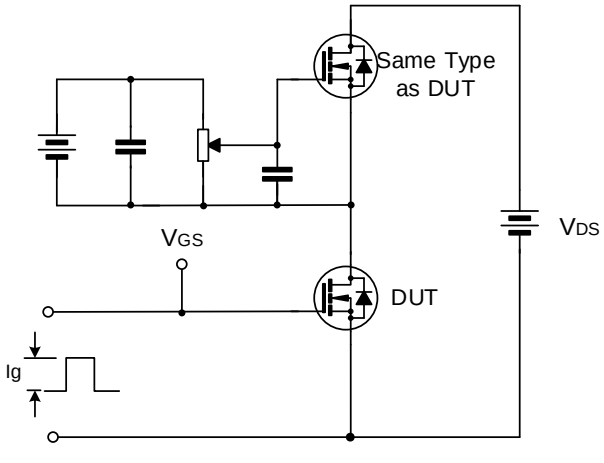

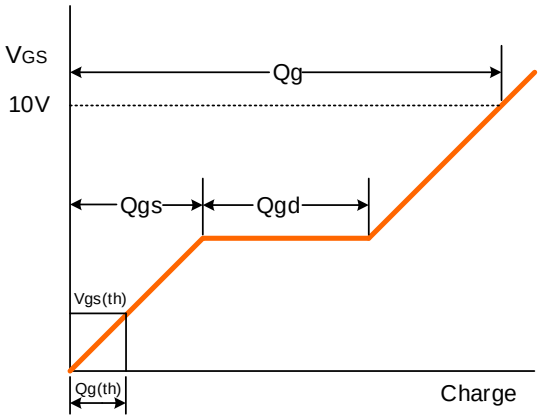

Resistive Switching Test Circuit & Waveform

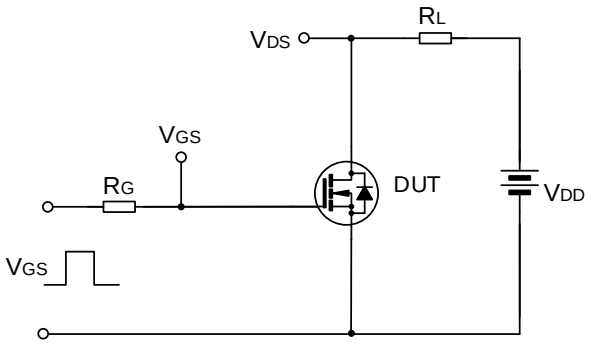

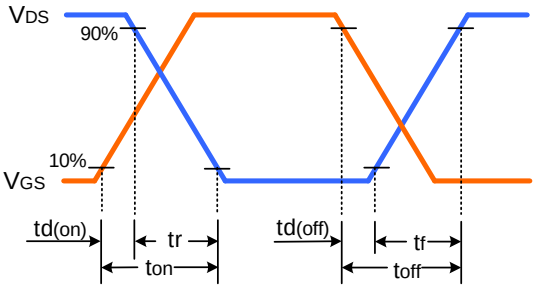

Unclamped Inductive Switching Test Circuit & Waveform

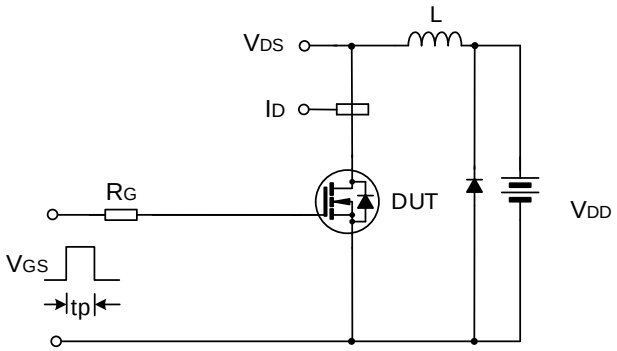

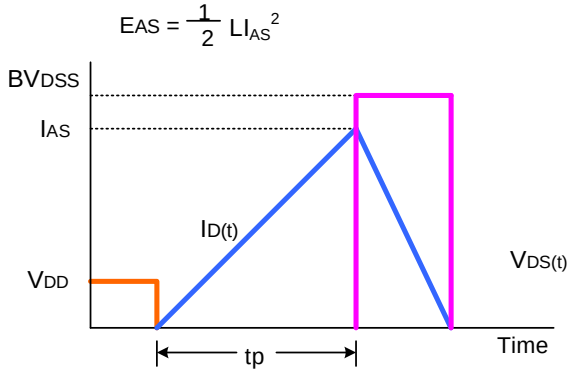

PACKAGE OUTLINE

PDFN-8-5X6X0.95-1.27 **UNIT: mm**

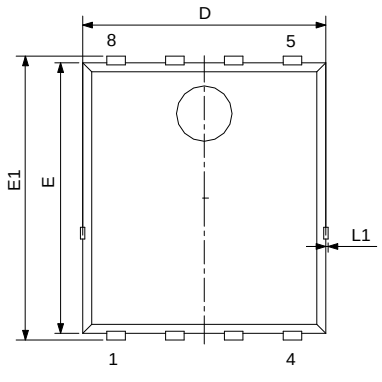

Top View



Side View

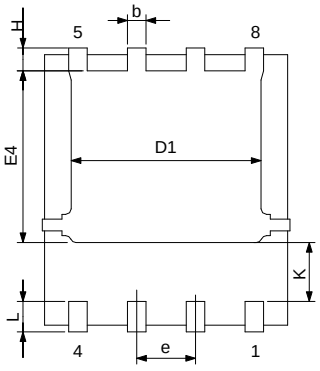

Bottom View

SYMBOL	MILLIMETER		
	MIN	NOM	MAX
A	0.90	—	1.20
c	0.154	0.25	0.354
D	4.80	—	5.40
E	5.66	—	6.06
D1	3.76	—	4.30
E1	5.90	—	6.35
b	0.30	—	0.55
K	1.10	1.30	1.50
e	1.07	1.27	1.37
E4	3.34	—	3.92
L	0.30	0.60	0.71
L1	—	—	0.12
H	0.40	—	0.71



MOS DEVICES OPERATE NOTES:

Electrostatic charges may exist in many things. Please take following preventive measures to prevent effectively the MOS electric circuit as a result of the damage which is caused by discharge:

- The operator must put on wrist strap which should be earthed to against electrostatic.
- Equipment cases should be earthed.
- All tools used during assembly, including soldering tools and solder baths, must be earthed.
- MOS devices should be packed in antistatic/conductive containers for transportation.

Important notice :

1. Silan reserves the right to make changes of this instruction without notice.
2. Customers should obtain the latest relevant information when purchasing and should verify whether such information is latest and complete. Please read this instruction and application manual and related materials carefully before using products, including the circuit operation precautions, etc.
3. The products belong to consumer electronic products. Silan does not give any warranties as to the suitability of the Silan's product for any specific use. The design intent, design definition and design of the product are not intended for application (the application stated in this instruction includes use, etc.) in transportation equipment, medical equipment, life-saving equipment, aerospace equipment, , non-civil equipment or non-civil use, etc. (the equipment stated in this instruction includes systems, devices, etc., all referred to as equipment).The product should not be used in any equipment or system whose manufacture, use or sale is prohibited under any applicable laws or regulations ("unintended use"). If the product is used for unintended use, therefore the full risks of such products application are borne by the customer and Silan assumes no liability for the product used for the unintended use. If the customer intends to use the Silan's product in a application where malfunction or failure can be reasonably be expected to result in personal injury, or serious property, or environment damage, the customer shall make adequate assessment, testing and verification, and Silan shall not be liable for such applications.
4. The application of the product described in this instruction, the application manual of the product and related materials is for illustrative purposes only, and Silan makes no warranty that such application can be used directly without further testing, verification or modification. Silan is not responsible for any assistance in product application or customers' product design. Customer shall be responsible for the application of Silan's products and the design, manufacture and use of customers' products using Silan's products (in this document, "use products", "apply Silan's products", "product application" and "customers' products using Silan's products" are synonymous). It is the sole responsibility of the customer to take the following actions: 1) Verify and determine whether Silan's products are suitable for the customers' applications and customers' products; 2) All applicable standards of the customers' industry shall be complied with and fully tested and verified when applying Silan's product or using Silan's product to develop and design customers' products; 3) Although Silan is constantly committed to improve product's quality and reliability, semiconductor products have possibility to malfunction or fail in various application environments. Customers are responsible for complying with safety standards and for providing adequate designs and safeguards for customers' products using Silan's product to minimize risks and avoid situations in which a malfunction or failure could cause bodily injury or damage to property; 4) When using the products, please do not exceed the maximum rating of the products, Stress above one or more limiting values will cause damage to the product and the equipment or affect the reliability to the equipment (customers' product); 5) Ensure customers' product using Silan's product are designed, manufactured and used in full compliance with all applicable standards, safety standards and other requirements of the customers' industry. The parameters stated in this instruction may and do vary in different applications, actual performance may vary over time, and customers must use the products within their effective static storage period (within one year from the delivery date of Silan). Customer should confirm the effective static storage period of the product if purchasing from a third party. Silan does not assume any responsibility if the product has exceeded the static storage period when it is used.
5. Do not disassemble, reverse-engineer, alter, modify, decompile or copy product, without Silan's prior written consent.
6. Please identify Silan's trademark when purchasing our product. Please contact us if there is any question. Our products are not sold through TAOBAO or any other third-party e-commerce platforms. If customers purchase from such platforms, please contact us in writing before purchasing to confirm whether the product is authentic and original from Silan.
7. Please use and apply product in compliance with all applicable laws and regulations, including but not limited to trade control regulations etc. The product is civil electronic product, please do not use it in non-civil fields.
8. Product promotion is endless, our company will wholeheartedly provide customers with better products!
9. Website: http: //www.silan.com.cn

Part No.:	SVG030R7NL5	Document Type:	Datasheet
Copyright:	HANGZHOU SILAN MICROELECTRONICS CO.,LTD	Website:	http: //www.silan.com.cn

Rev.: 1.2

Revision History:

1. Delete the wave soldering condition
2. Update the typical test circuit
3. Update the important notice

Rev.: 1.1

Revision History:

1. Update characteristics
2. Modify figure 7 and figure 11
3. Add figure 13 and figure 14

Rev.: 1.0

Revision History:

1. First release