TLC6C598-Q1 Power Logic 8-Bit Shift Register LED Driver

1 Features

- Qualified for Automotive Applications
- AEC-Q100 Qualified With the Following Results:
  - Device Temperature Grade 1: –40°C to 125°C Ambient Operating Temperature Range
  - Device HBM ESD Classification Level H2
  - Device CDM ESD Classification Level C3B
- Wide Vcc From 3 V to 5.5 V
- Output Maximum Rating of.40 V
- Eight Power DMOS Transistor Outputs of 50-mA Continuous Current With V_{CC} = 5 V
- Thermal Shutdown Protection
- Enhanced Cascading for Multiple Stages
- All Registers Cleared With Single Input
- Low Power Consumption
- Slow Switching Time (t_r and t_f), Which Helps Significantly With Reducing EMI
- 16-Pin TSSOP-PW Package
- 16-Pin SOIC-D Package

2 Applications

- Instrumentation Cluster
- Tell-Tale Lamps
- LED Illumination and Control

Typical Application Schematic

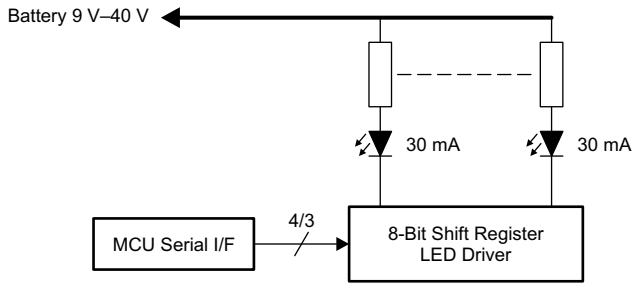

3 Description

The TLC6C598-Q1 is a monolithic, medium-voltage, low-current power 8-bit shift register designed for use in systems that require relatively moderate load power, such as LEDs.

This device contains an 8-bit serial-in, parallel-out shift register that feeds an 8-bit D-type storage register. Data transfers through both the shift and storage registers on the rising edge of the shift-register clock (SRCK) and the register clock (RCK), respectively. The storage register transfers data to the output buffer when shift register clear ($\overline{CLR}$) is high. A low on $\overline{CLR}$ clears all registers in the device. Holding the output enable ($\overline{G}$) high, holds all data in the output buffers low, and all drain outputs are off. Holding $\overline{G}$ low makes data from the storage register transparent to the output buffers. When data in the output buffers is low, the DMOS transistor outputs are off. When data is high, the DMOS transistor outputs have sink-current capability. The serial output (SER OUT) clocks out of the device on the falling edge of SRCK to provide additional hold time for cascaded applications. This provides improved performance for applications where clock signals may be skewed, devices are not located near one another, or the system must tolerate electromagnetic interference. The device contains built-in thermal shutdown protection.

Outputs are low-side, open-drain DMOS transistors with output ratings of 40 V and 50 mA continuous sink-current capabilities when Vcc = 5 V. The current limit decreases as the junction temperature increases for additional device protection. The device also provides up to 2000 V of ESD protection when tested using the human-body model and 200 V when using the machine model.

The TLC6C598-Q1 characterization is for for operation over the operating ambient temperature range of −40°C to 125°C.

Device Information(1)

PART NUMBER	PACKAGE	BODY SIZE (NOM)
TLC6C598-Q1	SOIC (16)	9.90 mm x 3.91 mm
	TSSOP (16)	5.00 mm x 4.40 mm

(1) For all available packages, see the orderable addendum at the end of the datasheet.

An IMPORTANT NOTICE at the end of this data sheet addresses availability, warranty, changes, use in safety-critical applications, intellectual property matters and other important disclaimers. PRODUCTION DATA.

Table of Contents

1 Features ... 1
2 Applications ... 1
3 Description ... 1
4 Revision History ... 2
5 Pin Configuration and Functions ... 3
6 Specifications ... 4
6.1 Absolute Maximum Ratings ... 4
6.2 ESD Ratings ... 4
6.3 Recommended Operating Conditions ... 4
6.4 Thermal Information ... 4
6.5 Electrical Characteristics ... 5
6.6 Timing Requirements ... 5
6.7 Switching Characteristics ... 6
6.8 Timing Waveforms ... 7
6.9 Typical Characteristics ... 8
7 Parameter Measurement Information ... 9
8 Detailed Description ... 11
8.1 Overview ... 11
8.2 Functional Block Diagram ... 11
8.3 Feature Description ... 12
8.4 Device Functional Modes ... 12
9 Application and Implementation ... 13
9.1 Application Information ... 13
9.2 Typical Application ... 13
10 Power Supply Recommendations ... 16
11 Layout ... 16
11.1 Layout Guidelines ... 16
11.2 Layout Example ... 16
12 Device and Documentation Support ... 17
12.1 Receiving Notification of Documentation Updates 17
12.2 Community Resources ... 17
12.3 Trademarks ... 17
12.4 Electrostatic Discharge Caution ... 17
12.5 Glossary ... 17
13 Mechanical, Packaging, and Orderable Information ... 17
13.1 Package Option Addendum ... 18

4 Revision History

NOTE: Page numbers for previous revisions may differ from page numbers in the current version.

Changes from Revision C (October 2015) to Revision D **Page**

- Added *Receiving Notification of Documentation Updates* section ... 17
- Added new orderable part number to *Package Option Addendum* ... 18

Changes from Revision B (March 2013) to Revision C **Page**

- Added *Pin Configuration and Functions* section, *ESD Ratings* table, *Feature Description* section, *Device Functional Modes*, *Application and Implementation* section, *Power Supply Recommendations* section, *Layout* section, *Device and Documentation Support* section, and *Mechanical, Packaging, and Orderable Information* section ... 1

Copyright © 2012–2016, Texas Instruments Incorporated

5 Pin Configuration and Functions

PW Package
16-Pin TSSOP
Top View

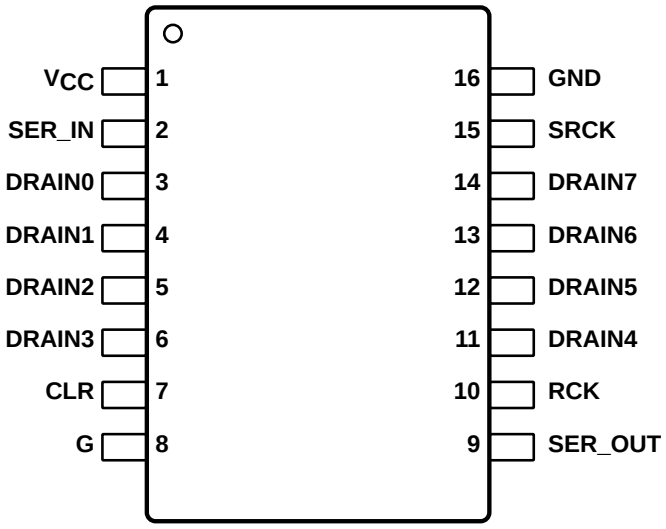

D Package
16-Pin SOIC
Top View

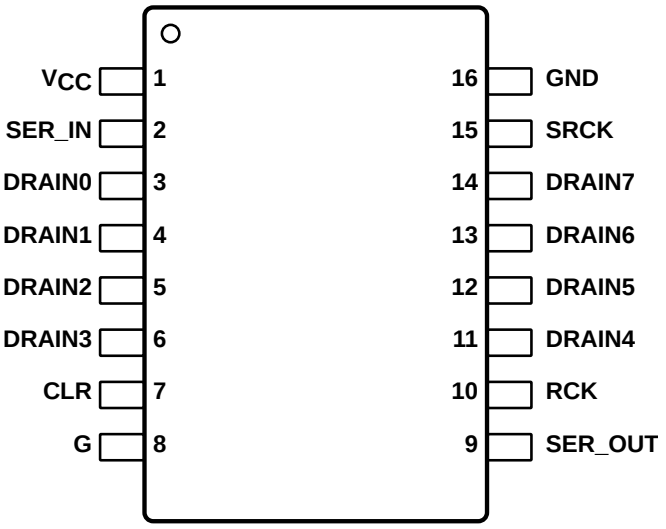

Pin Functions

PIN		I/O	DESCRIPTION
NAME	NO.		
$\overline{CLR}$	7	I	Shift register clear, active-low. The storage register transfers data to the output buffer when $\overline{CLR}$ is high. Driving $\overline{CLR}$ low clears all the registers in the device.
DRAIN0	3	O	Open-drain output, LED current-sink channel, connect to LED cathode
DRAIN1	4	O	Open-drain output, LED current-sink channel, connect to LED cathode
DRAIN2	5	O	Open-drain output, LED current-sink channel, connect to LED cathode
DRAIN3	6	O	Open-drain output, LED current-sink channel, connect to LED cathode
DRAIN4	11	O	Open-drain output, LED current-sink channel, connect to LED cathode
DRAIN5	12	O	Open-drain output, LED current-sink channel, connect to LED cathode
DRAIN6	13	O	Open-drain output, LED current-sink channel, connect to LED cathode
DRAIN7	14	O	Open-drain output, LED current-sink channel, connect to LED cathode
$\overline{G}$	8	I	Output enable, active-low. LED-channel enable and disable input pin. Having $\overline{G}$ low enables all drain channels according to the output-latch register content. When high, all channels are off.
GND	16	—	Power ground, the ground reference pin for the device. This pin must connect to the ground plane on the PCB.
RCK	10	I	Register clock. The data in each shift register stage transfers to the storage register at the rising edge of RCK.
SER IN	2	I	Serial data input. Data on SER IN loads into the internal register on each rising edge of SRCK.
SER OUT	9	O	Serial data output of the 8-bit serial shift register. The purpose of this pin is to cascade several devices on the serial bus.
SRCK	15	I	Serial clock input. On each rising SRCK edge, data transfers from SER IN to the internal serial shift registers.
V_{CC}	1	I	Power supply pin for the device. TI recommends adding a 0.1-μF ceramic capacitor close to the pin.

Copyright © 2012–2016, Texas Instruments Incorporated

6 Specifications

6.1 Absolute Maximum Ratings

over operating free-air temperature range (unless otherwise noted)(1)

		MIN	MAX	UNIT
V_{CC}	Logic supply voltage	–0.3	8	V
V_I	Logic input-voltage range	–0.3	8	V
V_{DS}	Power DMOS drain-to-source voltage	–0.3	42	V
	Continuous total dissipation	See *Thermal Information*		
T_A	Operating ambient temperature	–40	125	°C
T_J	Operating junction temperature range	–40	150	°C
T_{stg}	Storage temperature range	–55	165	°C

(1) Stresses beyond those listed under *Absolute Maximum Ratings* may cause permanent damage to the device. These are stress ratings only, and do not imply functional operation of the device at these or any other conditions beyond those indicated under *Recommended Operating Conditions*. Exposure to absolute-maximum-rated conditions for extended periods may affect device reliability.

6.2 ESD Ratings

				VALUE	UNIT
$V_{(ESD)}$	Electrostatic discharge	Human body model (HBM), per AEC Q100-002(1)		±2000	V
		Charged device model (CDM), per AEC Q100-011	All pins	±750	
			Corner pins (1, 8, 9, and 16)	±750	

(1) AEC Q100-002 indicates HBM stressing is done in accordance with the ANSI/ESDA/JEDEC JS-001 specification.

6.3 Recommended Operating Conditions

		MIN	MAX	UNIT
V_{CC}	Supply voltage	3	5.5	V
V_{IH}	High-level input voltage	2.4		V
V_{IL}	Low-level input voltage		0.7	V
T_A	Operating ambient temperature	–40	125	°C

6.4 Thermal Information

THERMAL METRIC(1)		TLC6C598-Q1		UNIT
		PW (TSSOP)	D (SOIC)	
		16 PINS	16 PINS	
$R_{\theta JA}$	Junction-to-ambient thermal resistance	129.4	100	°C/W
$R_{\theta JC(top)}$	Junction-to-case (top) thermal resistance	55.4	45	°C/W
$R_{\theta JB}$	Junction-to-board thermal resistance	65.8	40	°C/W
ψ_{JT}	Junction-to-top characterization parameter	9.9	10	°C/W
ψ_{JB}	Junction-to-board characterization parameter	65.2	40	°C/W
$R_{\theta JC(bot)}$	Junction-to-case (bottom) thermal resistance	NA	NA	°C/W

(1) For more information about traditional and new thermal metrics, see the *Semiconductor and IC Package Thermal Metrics* application report (SPRA953).

Copyright © 2012–2016, Texas Instruments Incorporated

6.5 Electrical Characteristics

V_{CC} = 5 V, T_C = 25°C (unless otherwise noted)

PARAMETER		TEST CONDITIONS		MIN	TYP	MAX	UNIT
	DRAIN0 to DRAIN7. Drain-to-source voltage					40	V
V_{OH}	High-level output voltage, SER OUT	I_{OH} = –20 µA	V_{CC} = 5 V	4.9	4.99		V
		I_{OH} = −4 mA		4.5	4.69		V
V_{OL}	Low-level output voltage, SER OUT	I_{OH} = 20 µA	V_{CC} = 5 V		0.001	0.01	V
		I_{OH} = 4 mA			0.25	0.4	V
I_{IH}	High-level input current	V_{CC} = 5 V, V_I = V_{CC}			0.2		µA
I_{IL}	Low-level input current	V_{CC} = 5 V, V_I = 0			–0.2		µA
I_{CC}	Logic supply current	V_{CC} = 5 V, no clock signal	All outputs off		0.1	1	µA
			All outputs on		88	160	
$I_{CC(FRQ)}$	Logic supply current at frequency	f_{SRCK} = 5 MHz, C_L = 30 pF	All outputs on		200		µA
I_{DSX}	Off-state drain current	V_{DS} = 30 V	V_{CC} = 5 V			0.1	µA
		V_{DS} = 30 V, T_C = 125°C	V_{CC} = 5 V		0.15	0.3	
$r_{DS(on)}$	Static drain-source on-state resistance	I_D = 20 mA, V_{CC} = 5 V, T_A = 25°C, Single channel ON		6	7.41	8.6	Ω
		I_D = 20 mA, V_{CC} = 5 V, T_A = 25°C, All channels ON		6.7	8.3	9.6	
		I_D = 20 mA, V_{CC} = 3.3 V, T_A = 25°C, Single channel ON		7.9	9.34	11.2	
		I_D = 20 mA, V_{CC} = 3.3 V, T_A = 25°C, All channels ON		8.7	10.25	12.3	
		I_D = 20 mA, V_{CC} = 5 V, T_A = 125°C, Single channel ON		9.1	11.13	12.9	
		I_D = 20 mA, V_{CC} = 5 V, T_A = 125°C, All channels ON		10.3	12.28	14.5	
		I_D = 20 mA, V_{CC} = 3.3 V, T_A = 125°C, Single channel ON		11.6	13.69	16.4	
		I_D = 20 mA, V_{CC} = 3.3 V, T_A = 125°C, All channels ON		12.8	14.89	18.2	
$T_{SHUTDOWN}$	Thermal shutdown trip point			150	175	200	ºC
T_{hys}	Hysteresis				15		ºC

6.6 Timing Requirements

		MIN	NOM	MAX	UNIT
t_{su}	Setup time, SER IN high before SRCK↑	15			ns
t_h	Hold time, SER IN high after SRCK↑	15			ns
t_w	SER IN pulse duration	40			ns

Copyright © 2012–2016, Texas Instruments Incorporated

6.7 Switching Characteristics

V_{CC} = 5 V, T_J = 25°C

PARAMETER		TEST CONDITIONS	MIN	TYP	MAX	UNIT
t_{PLH}	Propagation delay time, low-to-high-level output from $\overline{G}$	C_L = 30 pF, I_D = 48 mA		220		ns
t_{PHL}	Propagation delay time, high-to-low-level output from $\overline{G}$			75		ns
t_r	Rise time, drain output			210		ns
t_f	Fall time, drain output			128		ns
t_{pd}	Propagation delay time, SRCK↓ to SER OUT	C_L = 30 pF, I_D = 48 mA		49.4		ns
t_{or}	SER OUT rise time (10% to 90%)	C_L = 30 pF		20		ns
t_{of}	SER OUT fall time (90% to 10%)	C_L = 30 pF		20		ns
$f_{(SRCK)}$	Serial clock frequency	C_L = 30 pF, I_D = 20 mA			10	MHz
t_{SRCK_WH}	SRCK pulse duration, high		30			ns
t_{SRCK_WL}	SRCK pulse duration, low		30			ns

Copyright © 2012–2016, Texas Instruments Incorporated

6.8 Timing Waveforms

Figure 1 shows the SER IN to SER OUT waveform. The output signal appears on the falling edge of the shift register clock (SRCK) because there is a phase inverter at SER OUT (see Figure 13). As a result, it takes seven and a half periods of SRCK for data to transfer from SER IN to SER OUT.

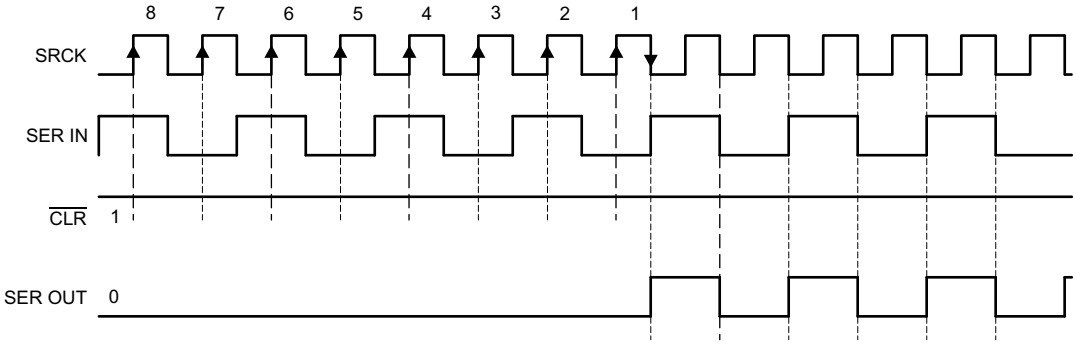

Figure 1. SER IN to SER OUT Waveform

Figure 2 shows the switching times and voltage waveforms. Tests for all these parameters took place using the test circuit shown in Figure 11.

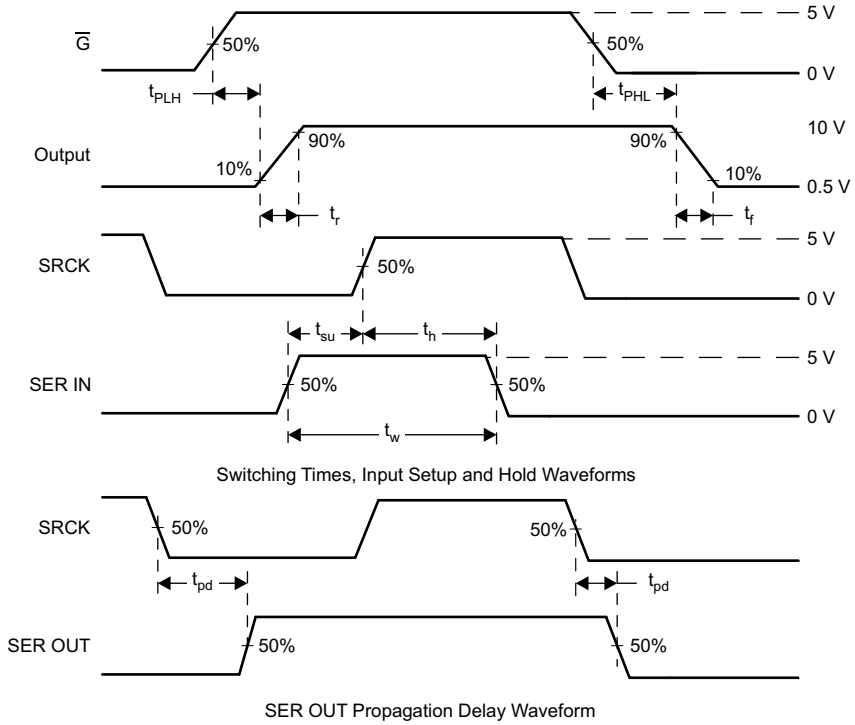

Figure 2. Switching Times and Voltage Waveforms

6.9 Typical Characteristics

Conditions for Figure 5 and Figure 6: Single channel on, conditions for Figure 7, Figure 8 and Figure 9: All channels on

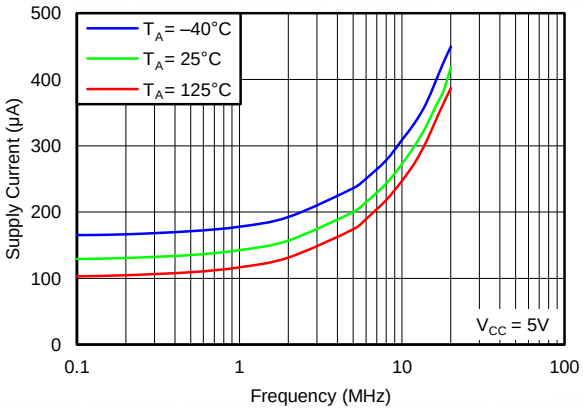

Figure 3. Supply Current vs Frequency

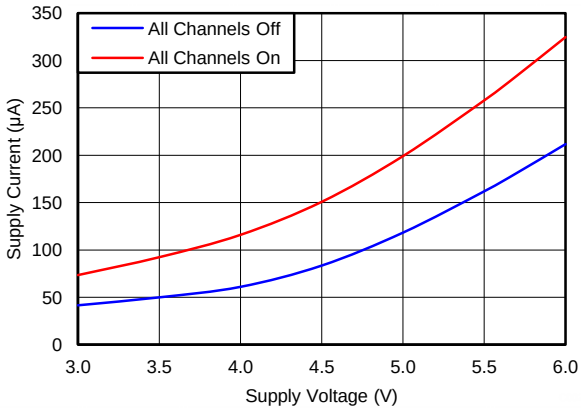

Figure 4. Supply Current vs Supply Voltage

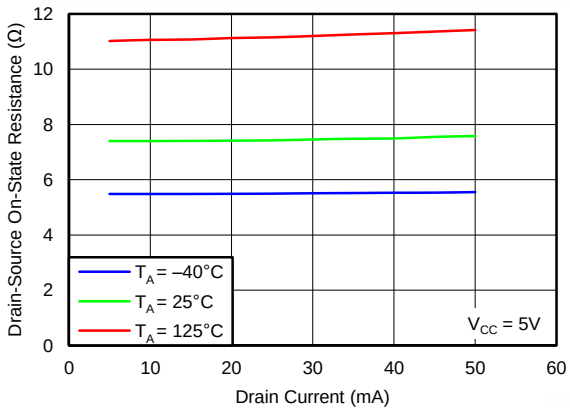

Figure 5. Drain-to-Source On-State Resistance vs Drain Current

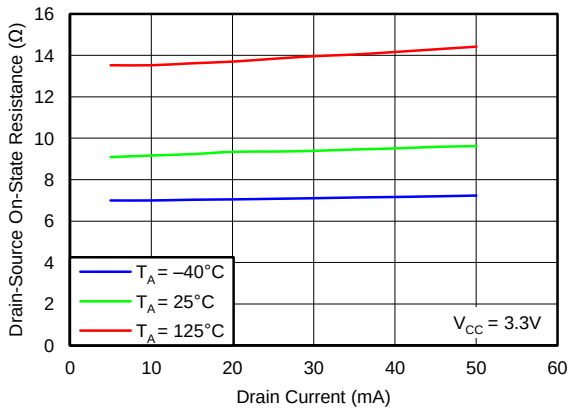

Figure 6. Drain-to-Source On-State Resistance vs Drain Current

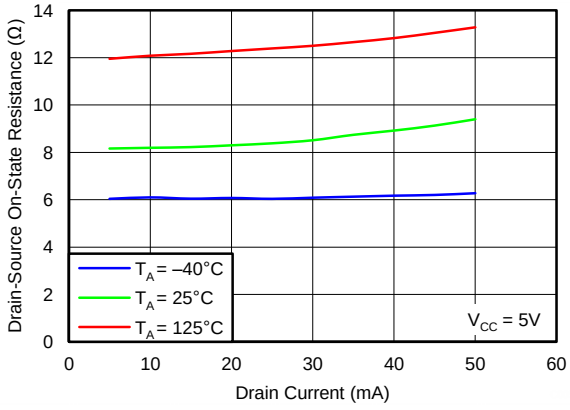

Figure 7. Drain-to-Source On-State Resistance vs Drain Current

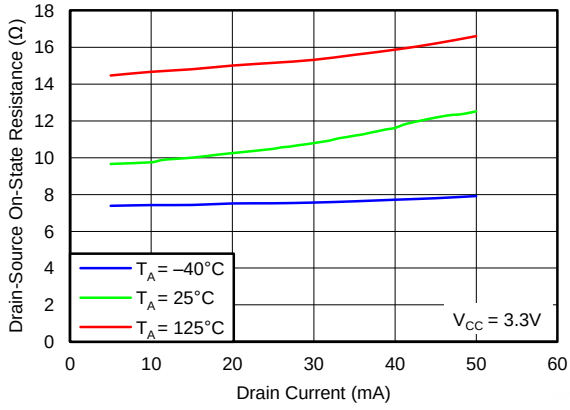

Figure 8. Drain-to-Source On-State Resistance vs Drain Current

Copyright © 2012–2016, Texas Instruments Incorporated

Typical Characteristics (continued)

Conditions for Figure 5 and Figure 6: Single channel on, conditions for Figure 7, Figure 8 and Figure 9: All channels on

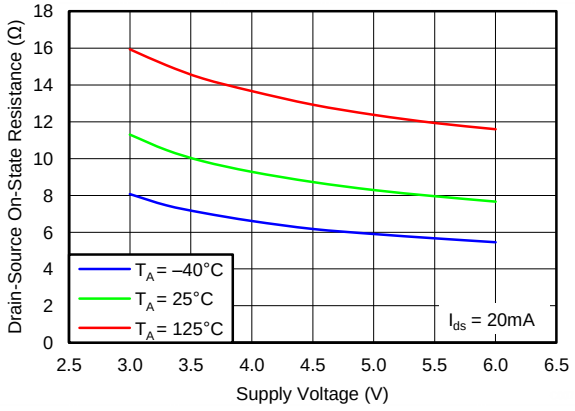

Figure 9. Drain-to-Source On-State Resistance vs Drain Current

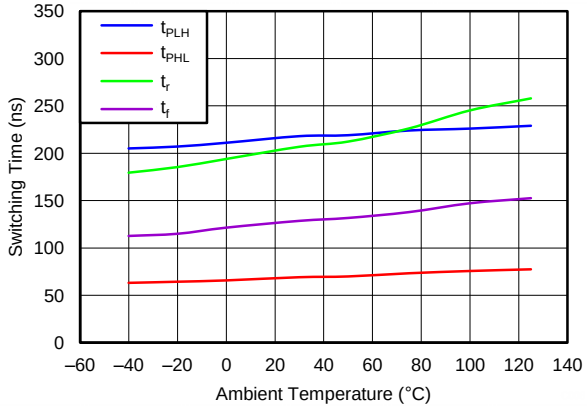

Figure 10. Switching Time vs Ambient Temperature

7 Parameter Measurement Information

Figure 11 and Figure 12 show the resistive-load test circuit and voltage waveforms. One can see from Figure 12 that with G held low and CLR held high, the status of each drain changes on the rising edge of the register clock, indicating the transfer of data to the output buffers at that time.

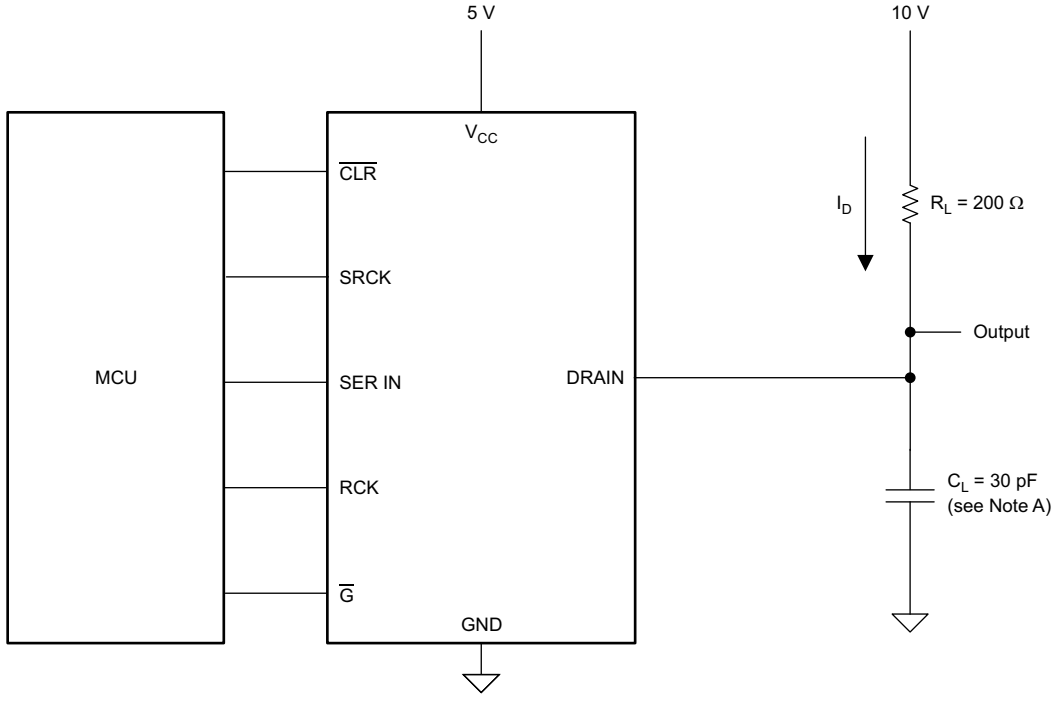

A. C_L includes probe and jig capacitance.

Figure 11. Resistive-Load Test Circuit

Parameter Measurement Information (continued)

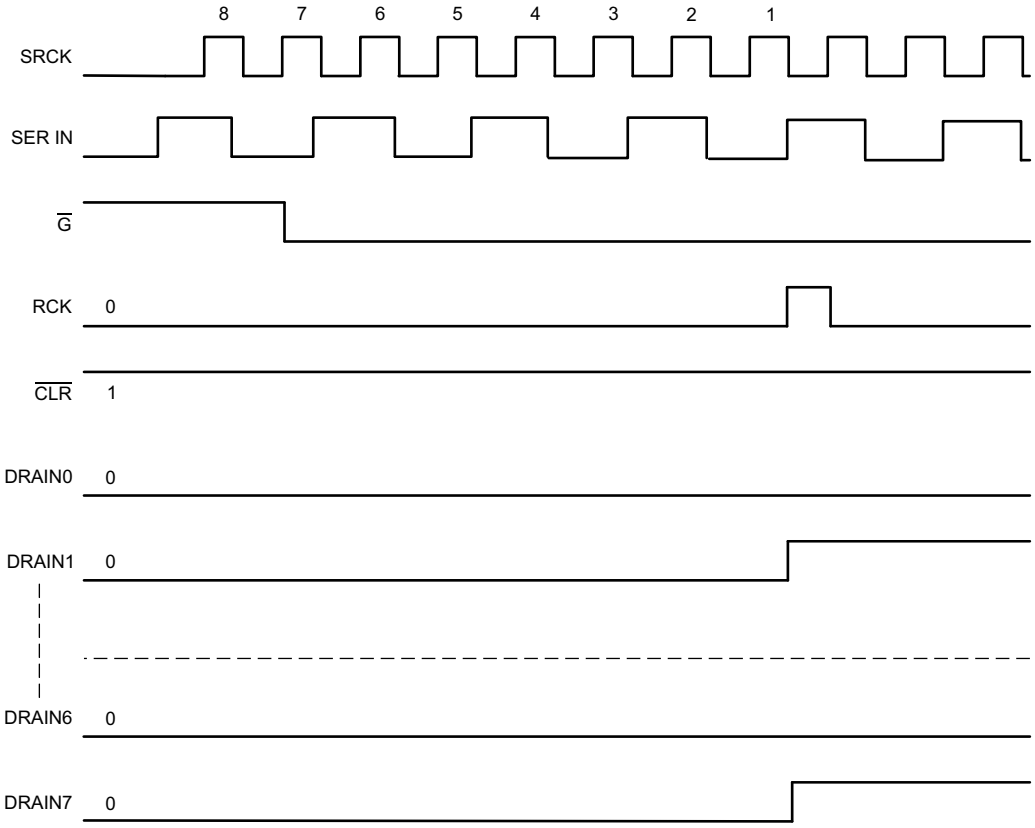

Figure 12. Voltage Waveforms

Copyright © 2012–2016, Texas Instruments Incorporated

8 Detailed Description

8.1 Overview

The TLC6C598-Q1 device is a monolithic, medium-voltage, low-current 8-bit shift register designed to drive relatively moderate load power such LEDs. The device contains an 8-bit serial-in, parallel-out shift register that feeds an 8-bit D-type storage register. Thermal shutdown protection is also built-into the device.

8.2 Functional Block Diagram

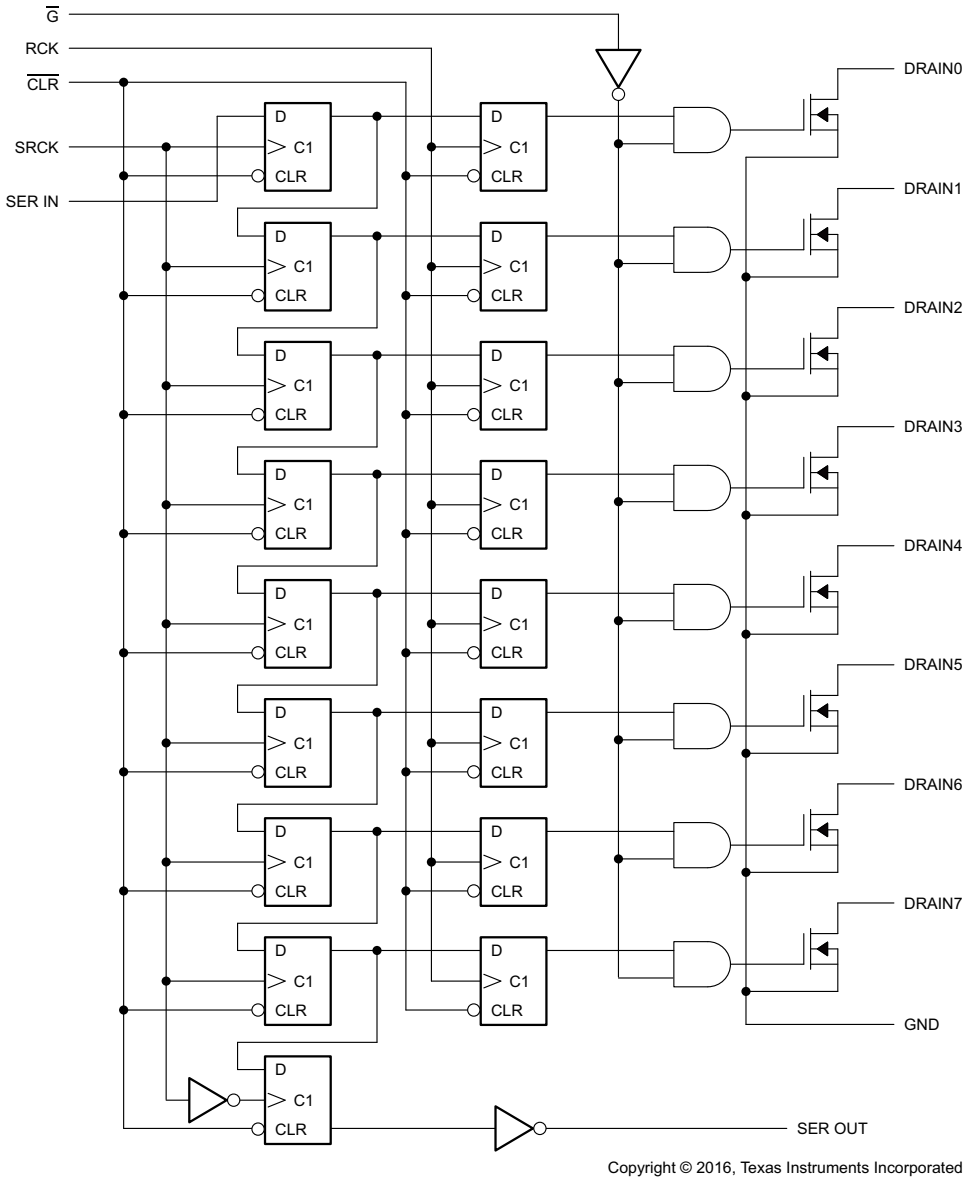

Figure 13. Logic Diagram (Positive) of TLC6C598-Q1

8.3 Feature Description

8.3.1 Thermal Shutdown

The device implements an internal thermal shutdown to protect itself if the junction temperature exceeds 175°C (typical). The thermal shutdown forces the device to have an open state when the junction temperature exceeds the thermal trip threshold. Once the junction temperature decreases below 160°C (typical), the device begins to operate again.

8.3.2 Serial-In Interface

The TLC6C598-Q1 device contains an 8-bit serial-in, parallel-out shift register that feeds an 8-bit D-type storage register. Data transfer through the shift and storage registers is on the rising edge of the shift register clock (SRCK) and the register clock (RCK), respectively. The storage register transfers data to the output buffer when shift register clear (CLR) is high.

8.3.3 Clear Registers

A logic low the CLR pin clears all registers in the device. TI suggests clearing the device during power up or initialization.

8.3.4 Output Channels

DRAIN0–DRAIN7. These pins can survive up to 40-V LED supply voltage. This is quite helpful during automotive load-dump conditions.

8.3.5 Register Clock

RCK is the storage-register clock. Data in the storage register appears at the output whenever the output enable ($\overline{G}$) input signal is high.

8.3.6 Cascade Through SER OUT

By connecting the SER OUT pin to the SER IN input of the next device on the serial bus to cascade, the data transfers to the next device on the falling edge of SRCK. This can improve the cascade application reliability, as it can avoid the issue that the second device receives SRCK and data input at the same rising edge of SRCK.

8.3.7 Output Control

Holding the output enable (pin G) high holds all data in the output buffers low, and all drain outputs are off. Holding G low makes data from the storage register transparent to the output buffers. When data in the output buffers is low, the DMOS transistor outputs are off. When data is high, the DMOS transistor outputs are capable of sinking current. This pin also can be used for global PWM dimming.

8.4 Device Functional Modes

8.4.1 Operation With V_{CC} < 3 V

This device works normally within the range 3 V ≤ V_{CC} ≤ 5.5 V. When the operating voltage is lower than 3 V, correct behavior of the device, including communication interface and current capability, is not assured.

8.4.2 Operation With 5.5 V ≤ V_{CC} ≤ 8 V

The device works normally in this voltage range, but reliability issues may occur if the device works for a long time in this voltage range.

Copyright © 2012–2016, Texas Instruments Incorporated

9 Application and Implementation

NOTE

Information in the following applications sections is not part of the TI component specification, and TI does not warrant its accuracy or completeness. TI's customers are responsible for determining suitability of components for their purposes. Customers should validate and test their design implementation to confirm system functionality.

9.1 Application Information

The TLC6C598-Q1 device is a serial-in, parallel-out, power and logic, 8-bit shift register with low-side open-drain DMOS output ratings of 40-V and 50-mA continuous sink-current capabilities when V_{CC} = 5 V. The device is designed to drive resistive loads and is particularly well-suited as an interface between a microcontroller and LEDs or lamps. The device also provides up to 2000 V of ESD protection when tested using the human body model and 200 V when using the machine model

9.2 Typical Application

Figure 14 shows a typical cascade application circuit with two TLC6C598-Q1 chips configured in cascade topology. The MCU generates all the input signals.

Copyright © 2012–2016, Texas Instruments Incorporated

Typical Application (continued)

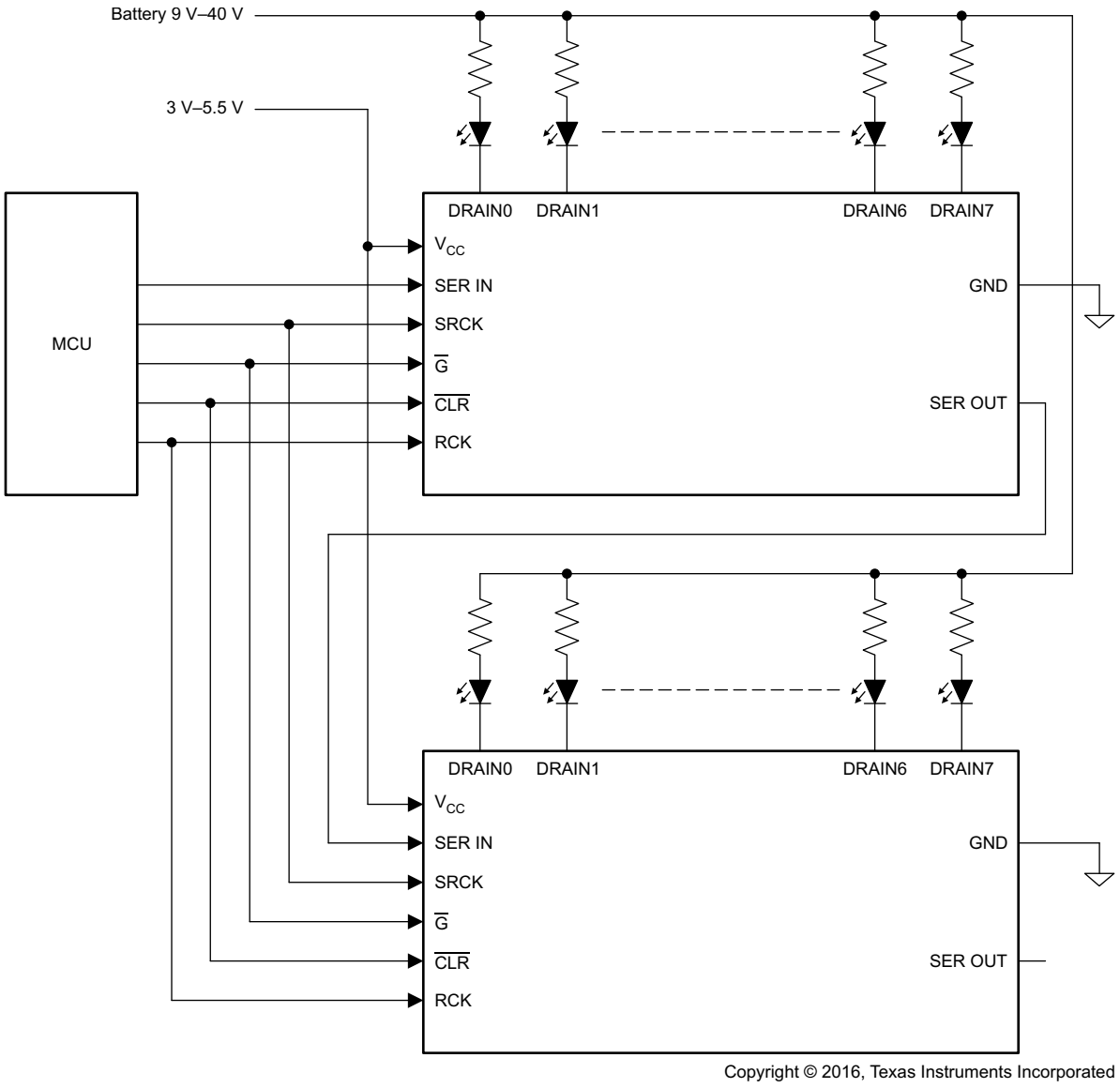

Copyright © 2016, Texas Instruments Incorporated

Figure 14. Typical Application Circuit

9.2.1 Design Requirements

DESIGN PARAMETER	EXAMPLE VALUE
$V_{Battery}$	9 V to 40 V
V_{CC_1}	3.3 V
I(D0), I(D1), I(D2), I(D3) , I(D4), I(D5), I(D6), I(D7)	30 mA
V_{CC_2}	5 V
I(D8), I(D9), I(D10), I(D11) , I(D12), I(D13), I(D14), I(D15)	50 mA

Copyright © 2012–2016, Texas Instruments Incorporated

9.2.2 Detailed Design Procedure

To begin the design process, the designer must decide on a few parameters, as follows:

- V_{supply}: LED supply voltage
- V_{Dx}: LED forward voltage
- I: LED current

With these parameters determined, the resistor in series with the LED can be calculated by using the following equation:

$$R_X = (V_{Supply} - V_{Dx}) / I \quad (1)$$

9.2.3 Application Curve

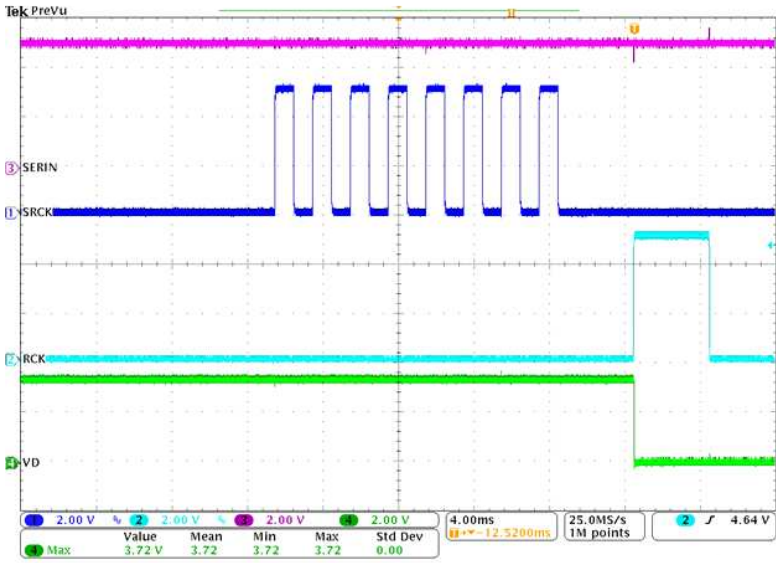

Figure 15. TLC6C598-Q1 Application Waveform

10 Power Supply Recommendations

The TLC6C598-Q1 device is designed to operate with an input voltage supply range from 3 V to 5.5 V. This input supply should be well regulated. TI recommends placing the ceramic bypass capacitors near the V_{CC} pin.

11 Layout

11.1 Layout Guidelines

There are no special layout requirement for the digital signal pins. The only requirement is placing the ceramic bypass capacitors near the corresponding pin.

Maximize the copper coverage on the PCB to increase the thermal conductivity of the board. The major heat-flow path from the package to the ambient is through the cooper on the PCB. Maximizing the copper coverage is extremely important when the design does not include heat sinks attached to the PCB on the other side of the package.

Add as many thermal vias as possible directly under the package ground pad to optimize the thermal conductivity of the board.

All thermal vias should be either plated shut or plugged and capped on both sides of the board to prevent solder voids. To ensure reliability and performance, the solder coverage should be at least 85%.

11.2 Layout Example

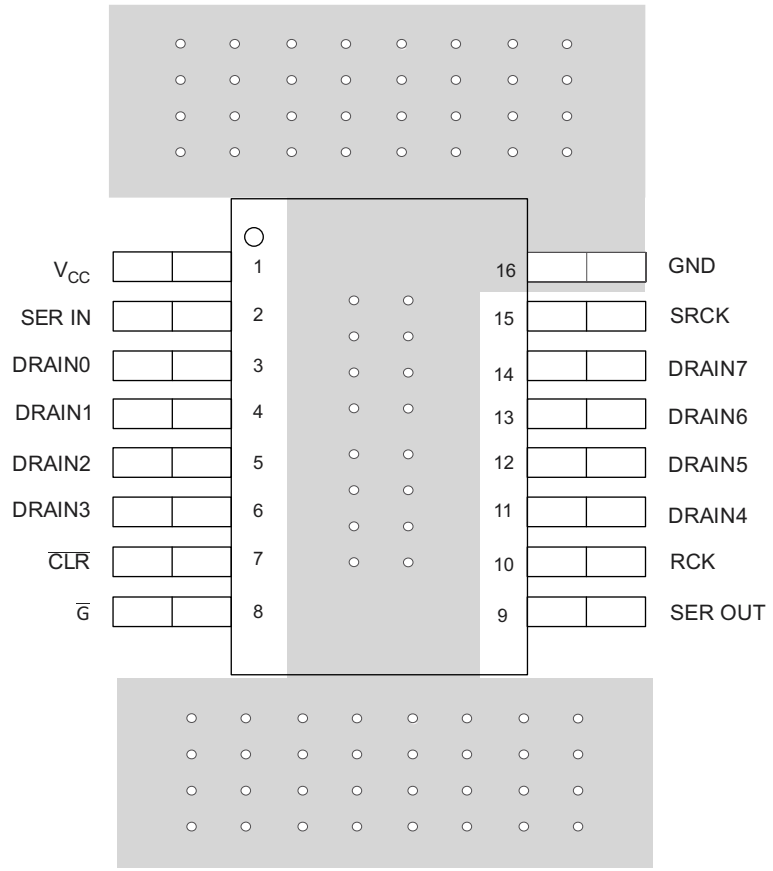

Figure 16. TLC6C598-Q1 Example Layout

Copyright © 2012–2016, Texas Instruments Incorporated

12 Device and Documentation Support

12.1 Receiving Notification of Documentation Updates

To receive notification of documentation updates, navigate to the device product folder on ti.com. In the upper right corner, click on *Alert me* to register and receive a weekly digest of any product information that has changed. For change details, review the revision history included in any revised document.

12.2 Community Resources

The following links connect to TI community resources. Linked contents are provided "AS IS" by the respective contributors. They do not constitute TI specifications and do not necessarily reflect TI's views; see TI's Terms of Use.

TI E2E™ Online Community ***TI's Engineer-to-Engineer (E2E) Community.*** Created to foster collaboration among engineers. At e2e.ti.com, you can ask questions, share knowledge, explore ideas and help solve problems with fellow engineers.

Design Support ***TI's Design Support*** Quickly find helpful E2E forums along with design support tools and contact information for technical support.

12.3 Trademarks

E2E is a trademark of Texas Instruments.
All other trademarks are the property of their respective owners.

12.4 Electrostatic Discharge Caution



These devices have limited built-in ESD protection. The leads should be shorted together or the device placed in conductive foam during storage or handling to prevent electrostatic damage to the MOS gates.

12.5 Glossary

SLYZ022 — *TI Glossary*.

This glossary lists and explains terms, acronyms, and definitions.

13 Mechanical, Packaging, and Orderable Information

The following pages include mechanical, packaging, and orderable information. This information is the most current data available for the designated devices. This data is subject to change without notice and revision of this document. For browser-based versions of this data sheet, refer to the left-hand navigation.

Copyright © 2012–2016, Texas Instruments Incorporated

13.1 Package Option Addendum

13.1.1 Packaging Information

Orderable Device	Status (1)	Package Type	Package Drawing	Pins	Package Qty	Eco Plan (2)	Lead/Ball Finish (3)	MSL Peak Temp (4)	Op Temp (°C)	Device Marking (5) (6)
TLC6C598QPWRQ1	ACTIVE	TSSOP	PW	16	2000	Green (RoHS & no Sb/Br)	CU NIPDAU	Level-3-260C-168 HR	-40 to 125	6C598
TLC6C598QDRQ1	ACTIVE	SOIC	D	16	2500	Green (RoHS & no Sb/Br)	CU NIPDAU	Level-3-260C-168 HR	-40 to 125	TLC6C598
TLC6C598CQDRQ1	ACTIVE	SOIC	D	16	2500	Green (RoHS & no Sb/Br)	CU NIPDAU	Level-3-260C-168 HR	-40 to 125	TLC6C598C

(1) The marketing status values are defined as follows:
ACTIVE: Product device recommended for new designs.
LIFEBUY: TI has announced that the device will be discontinued, and a lifetime-buy period is in effect.
NRND: Not recommended for new designs. Device is in production to support existing customers, but TI does not recommend using this part in a new design.
PRE_PROD Unannounced device, not in production, not available for mass market, nor on the web, samples not available.
PREVIEW: Device has been announced but is not in production. Samples may or may not be available.
OBSOLETE: TI has discontinued the production of the device.

(2) Eco Plan - The planned eco-friendly classification: Pb-Free (RoHS), Pb-Free (RoHS Exempt), or Green (RoHS & no Sb/Br) - please check http://www.ti.com/productcontent for the latest availability information and additional product content details.
TBD: The Pb-Free/Green conversion plan has not been defined.
Pb-Free (RoHS): TI's terms "Lead-Free" or "Pb-Free" mean semiconductor products that are compatible with the current RoHS requirements for all 6 substances, including the requirement that lead not exceed 0.1% by weight in homogeneous materials. Where designed to be soldered at high temperatures, TI Pb-Free products are suitable for use in specified lead-free processes.
Pb-Free (RoHS Exempt): This component has a RoHS exemption for either 1) lead-based flip-chip solder bumps used between the die and package, or 2) lead-based die adhesive used between the die and leadframe. The component is otherwise considered Pb-Free (RoHS compatible) as defined above.
Green (RoHS & no Sb/Br): TI defines "Green" to mean Pb-Free (RoHS compatible), and free of Bromine (Br) and Antimony (Sb) based flame retardants (Br or Sb do not exceed 0.1% by weight in homogeneous material)

(3) Lead/Ball Finish - Orderable Devices may have multiple material finish options. Finish options are separated by a vertical ruled line. Lead/Ball Finish values may wrap to two lines if the finish value exceeds the maximum column width.

(4) MSL, Peak Temp. -- The Moisture Sensitivity Level rating according to the JEDEC industry standard classifications, and peak solder temperature.

(5) There may be additional marking, which relates to the logo, the lot trace code information, or the environmental category on the device

(6) Multiple Device markings will be inside parentheses. Only on Device Marking contained in parentheses and separated by a "~" will appear on a device. If a line is indented then it is a continuation of the previous line and the two combined represent the entire Device Marking for that device.

Important Information and Disclaimer: The information provided on this page represents TI's knowledge and belief as of the date that it is provided. TI bases its knowledge and belief on information provided by third parties, and makes no representation or warranty as to the accuracy of such information. Efforts are underway to better integrate information from third parties. TI has taken and continues to take reasonable steps to provide representative and accurate information but may not have conducted destructive testing or chemical analysis on incoming materials and chemicals. TI and TI suppliers consider certain information to be proprietary, and thus CAS numbers and other limited information may not be available for release.

In no event shall TI's liability arising out of such information exceed the total purchase price of the TI part(s) at issue in this document sold by TI to Customer on an annual basis.

Copyright © 2012–2016, Texas Instruments Incorporated

13.1.2 Tape and Reel Information

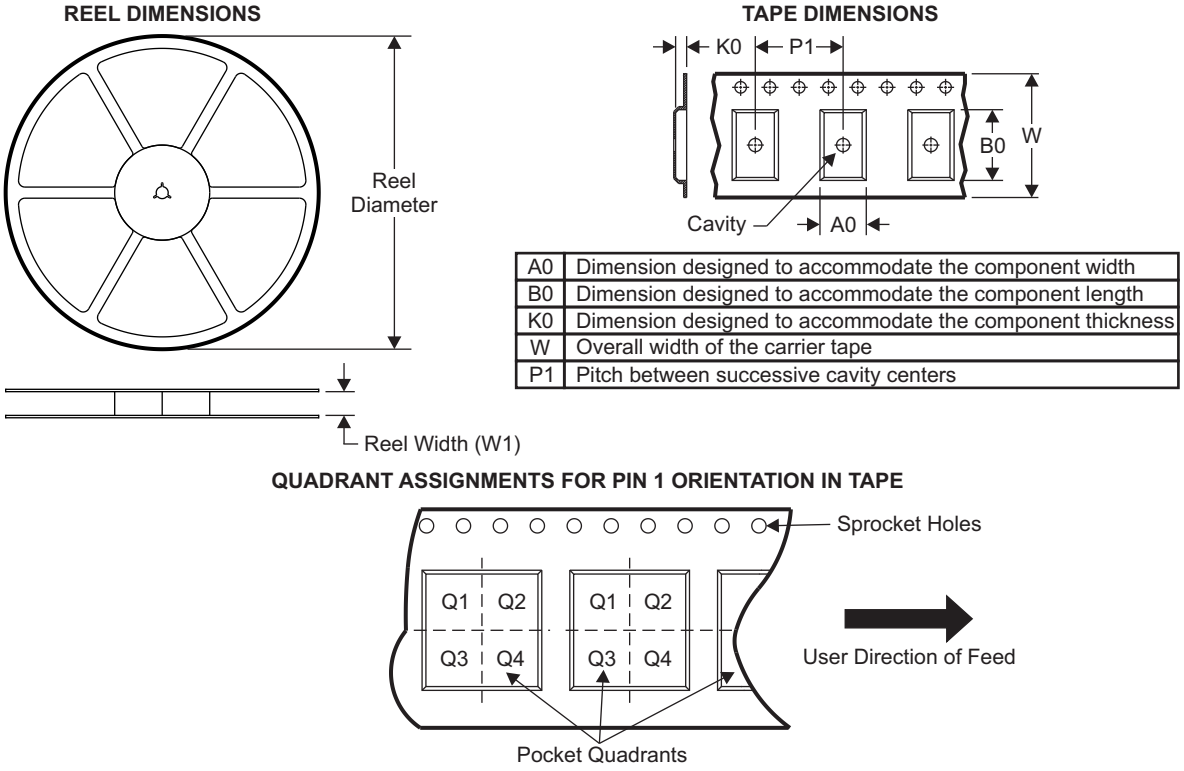

A0	Dimension designed to accommodate the component width
B0	Dimension designed to accommodate the component length
K0	Dimension designed to accommodate the component thickness
W	Overall width of the carrier tape
P1	Pitch between successive cavity centers

Device	Package Type	Package Drawing	Pins	SPQ	Reel Diameter (mm)	Reel Width W1 (mm)	A0 (mm)	B0 (mm)	K0 (mm)	P1 (mm)	W (mm)	Pin1 Quadrant
TLC6C598QPWRQ1	TSSOP	PW	16	2000	330	12.4	6.9	5.6	1.6	8	12	Q1
TLC6C598QDRQ1	SOIC	D	16	2500	330	16.4	6.5	10.3	2.1	8	16	Q1
TLC6C598CQDRQ1	SOIC	D	16	2500	330	16.4	6.5	10.3	2.1	8	16	Q1

Copyright © 2012–2016, Texas Instruments Incorporated

TAPE AND REEL BOX DIMENSIONS

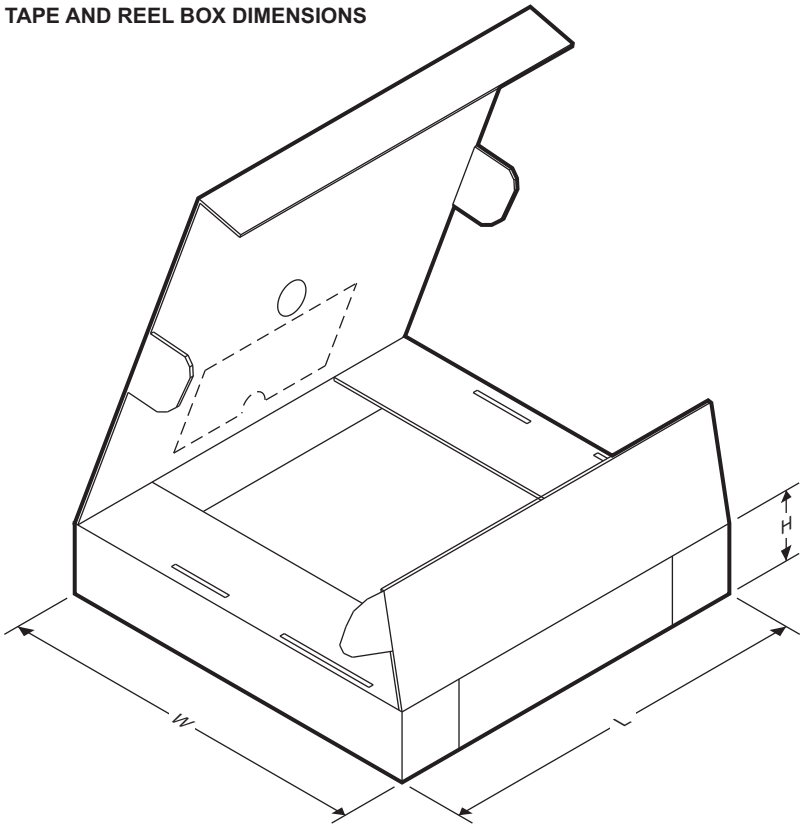

Device	Package Type	Package Drawing	Pins	SPQ	Length (mm)	Width (mm)	Height (mm)
TLC6C598QPWRQ1	TSSOP	PW	16	2000	367	367	38
TLC6C598QDRQ1	SOIC	D	16	2500	367	367	38
TLC6C598CQDRQ1	SOIC	D	16	2500	367	367	38

Copyright © 2012–2016, Texas Instruments Incorporated

D (R–PDSO–G16) PLASTIC SMALL OUTLINE

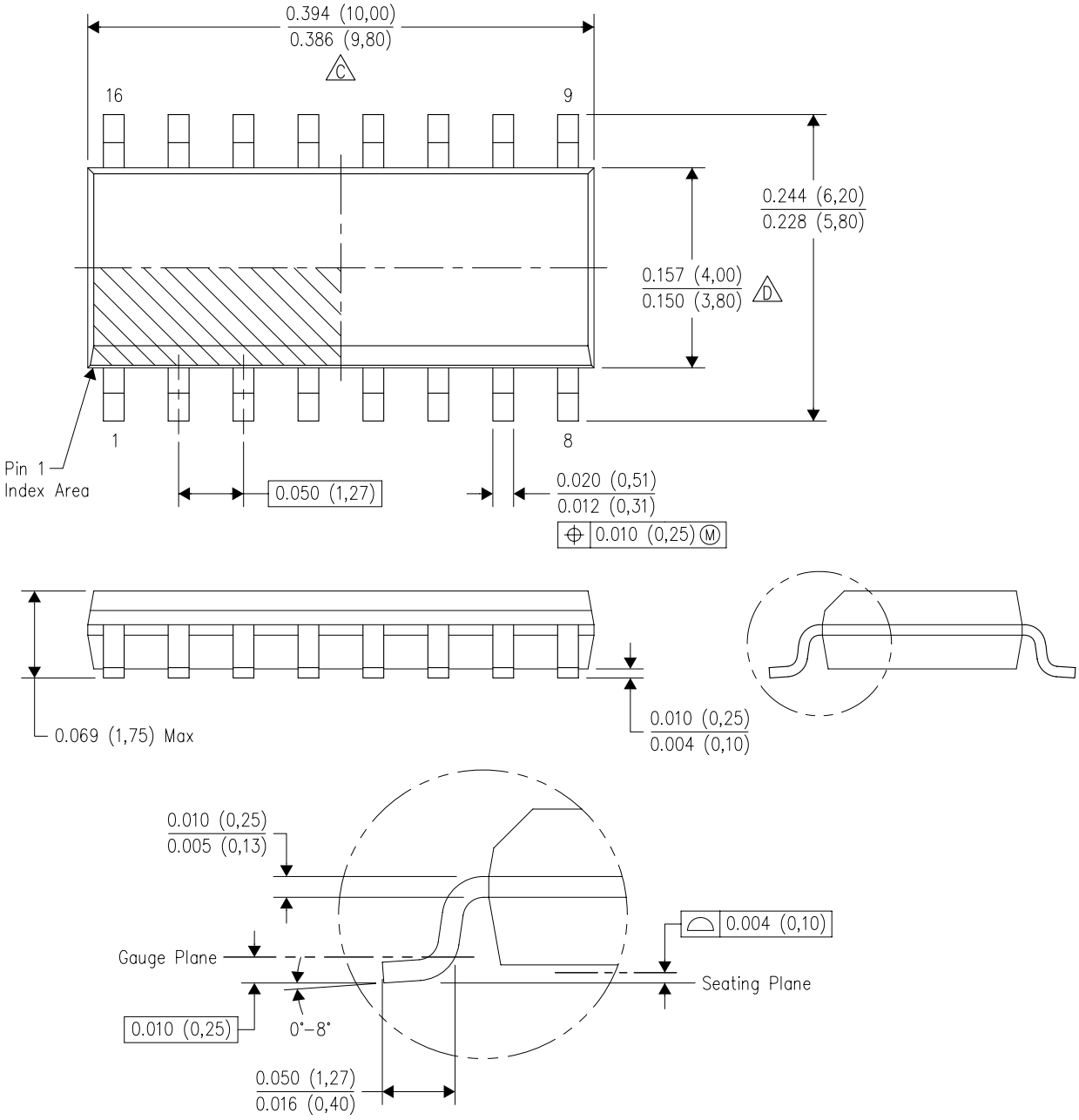

NOTES:
A. All linear dimensions are in inches (millimeters).
B. This drawing is subject to change without notice.
C. Body length does not include mold flash, protrusions, or gate burrs. Mold flash, protrusions, or gate burrs shall not exceed 0.006 (0,15) each side.
D. Body width does not include interlead flash. Interlead flash shall not exceed 0.017 (0,43) each side.
E. Reference JEDEC MS–012 variation AC.

PACKAGE OUTLINE

PW0016A

TSSOP - 1.2 mm max height

SMALL OUTLINE PACKAGE

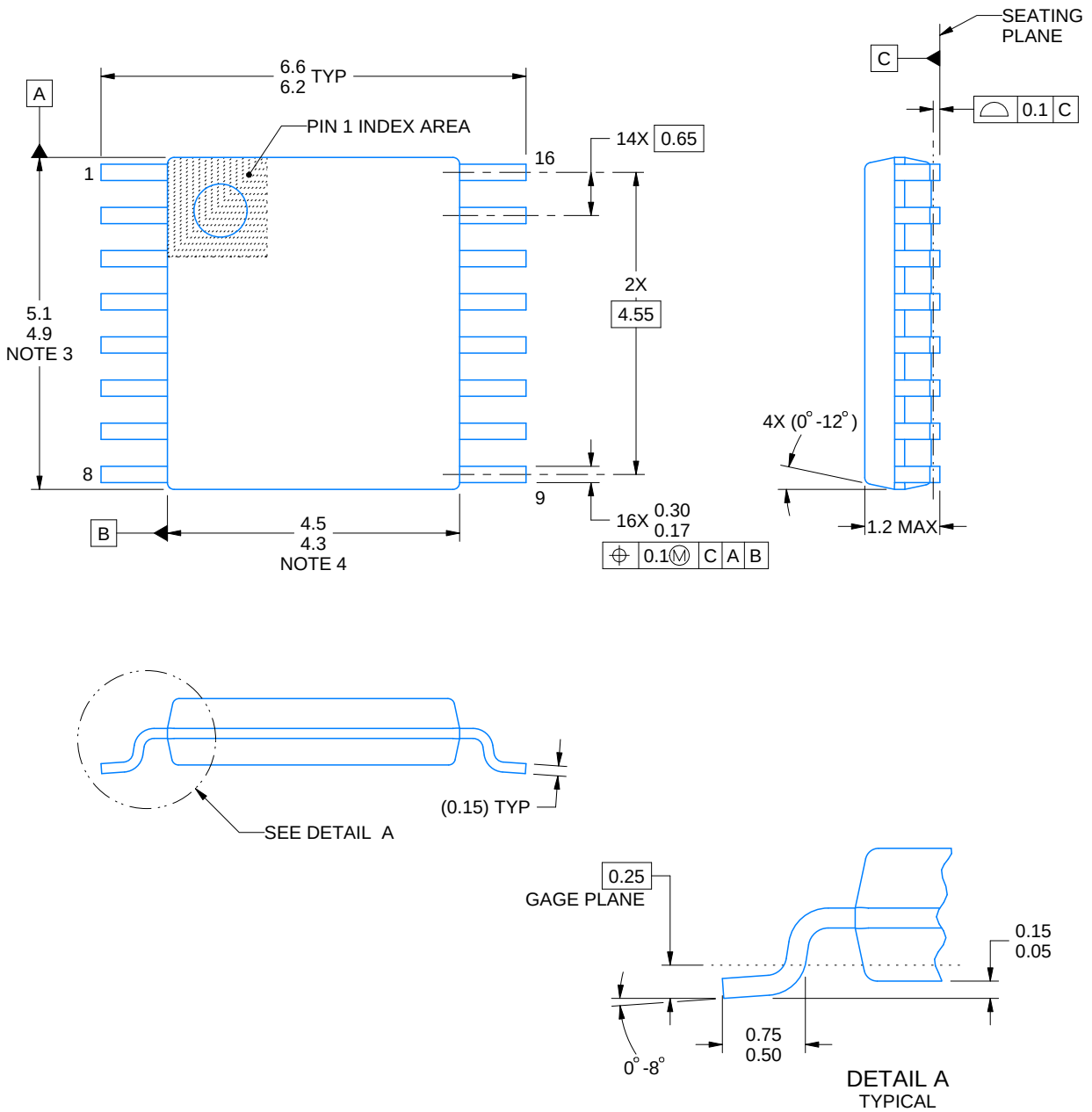

NOTES:

1. All linear dimensions are in millimeters. Any dimensions in parenthesis are for reference only. Dimensioning and tolerancing per ASME Y14.5M.
2. This drawing is subject to change without notice.
3. This dimension does not include mold flash, protrusions, or gate burrs. Mold flash, protrusions, or gate burrs shall not exceed 0.15 mm per side.
4. This dimension does not include interlead flash. Interlead flash shall not exceed 0.25 mm per side.
5. Reference JEDEC registration MO-153.

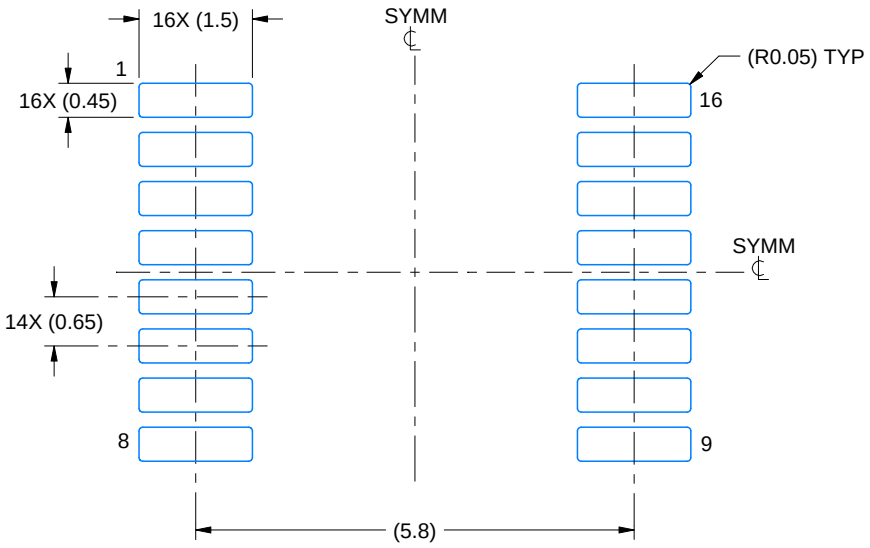

LAND PATTERN EXAMPLE
EXPOSED METAL SHOWN
SCALE: 10X



SOLDER MASK DETAILS

4220204/B 12/2023

NOTES: (continued)

6. Publication IPC-7351 may have alternate designs.
7. Solder mask tolerances between and around signal pads can vary based on board fabrication site.

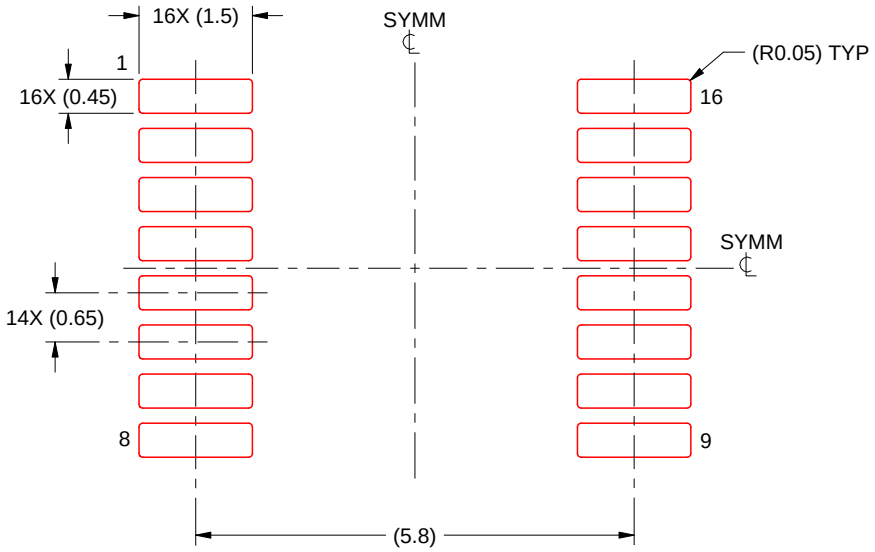

SOLDER PASTE EXAMPLE
BASED ON 0.125 mm THICK STENCIL
SCALE: 10X

4220204/B 12/2023

NOTES: (continued)

8. Laser cutting apertures with trapezoidal walls and rounded corners may offer better paste release. IPC-7525 may have alternate design recommendations.
9. Board assembly site may have different recommendations for stencil design.

IMPORTANT NOTICE AND DISCLAIMER

TI PROVIDES TECHNICAL AND RELIABILITY DATA (INCLUDING DATASHEETS), DESIGN RESOURCES (INCLUDING REFERENCE DESIGNS), APPLICATION OR OTHER DESIGN ADVICE, WEB TOOLS, SAFETY INFORMATION, AND OTHER RESOURCES “AS IS” AND WITH ALL FAULTS, AND DISCLAIMS ALL WARRANTIES, EXPRESS AND IMPLIED, INCLUDING WITHOUT LIMITATION ANY IMPLIED WARRANTIES OF MERCHANTABILITY, FITNESS FOR A PARTICULAR PURPOSE OR NON-INFRINGEMENT OF THIRD PARTY INTELLECTUAL PROPERTY RIGHTS.

These resources are intended for skilled developers designing with TI products. You are solely responsible for (1) selecting the appropriate TI products for your application, (2) designing, validating and testing your application, and (3) ensuring your application meets applicable standards, and any other safety, security, regulatory or other requirements.

These resources are subject to change without notice. TI grants you permission to use these resources only for development of an application that uses the TI products described in the resource. Other reproduction and display of these resources is prohibited. No license is granted to any other TI intellectual property right or to any third party intellectual property right. TI disclaims responsibility for, and you fully indemnify TI and its representatives against any claims, damages, costs, losses, and liabilities arising out of your use of these resources.

TI’s products are provided subject to TI’s Terms of Sale, TI’s General Quality Guidelines, or other applicable terms available either on ti.com or provided in conjunction with such TI products. TI’s provision of these resources does not expand or otherwise alter TI’s applicable warranties or warranty disclaimers for TI products. Unless TI explicitly designates a product as custom or customer-specified, TI products are standard, catalog, general purpose devices.

TI objects to and rejects any additional or different terms you may propose.

Copyright © 2026, Texas Instruments Incorporated

Last updated 10/2025