PGB2 0201 Series

Surface Mount Polymeric Electrostatic Discharge Suppressors

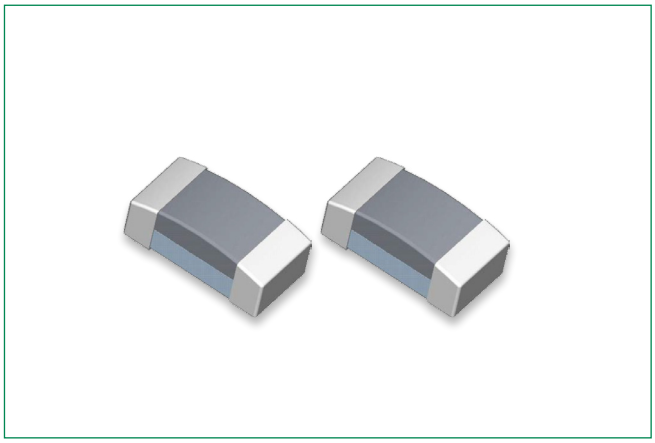

Equivalent Circuits

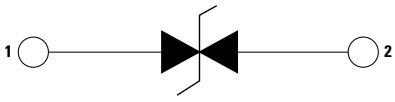

Product Characteristics

Part Number	Lines Protected	Component Package
PGB2010201KR	1	0201

Description

PULSE-GUARD® ESD Suppressors help protect sensitive electronic equipment against electrostatic discharge (ESD).

They use polymer composite materials to suppress fast- rising ESD transients (as specified in IEC 61000-4-2), while adding virtually no capacitance to the circuit.

They supplement the on-chip protection of integrated circuitry and are best suited for low-voltage, high-speed applications where low capacitance is important to ensure minimal interference of data signal integrity.

The new and ultra-small surface mount PGB2 0201 products offer a RoHS Compliant, Halogen Free, and 100% Lead Free circuit protection solution.

Features & Benefits

- Lead-free, Halogen-free, and RoHS compliant
- Ultra-low capacitance
- Low leakage current
- Fast response time
- One line of protection
- Bi-directional
- Withstands multiple ESD strikes
- Compatible with pick-and-place processes

Applications

- Antenna circuit
- Laptop / desktop computer
- Network hardware
- HDMI 1.3 / 1.4 / 2.0
- USB 3.2
- Computer peripherals
- Digital camera
- External storage
- Set-top box
- SATA and eSATA

Electrical Characteristics

Items	PGB 0201					Unit
Rated voltage (Max)	**6**	**12**	**15**	**24**	**30**	**V**
Leakage current			0.01			µA
Trigger voltage			300			V
Clamping voltage			20			V
Capacitance @1MHz			0.05			pF
IEC 61000-4-2 Direct Discharge			8			kV
IEC 61000-4-2 Air Discharge			15			kV
Response time (Max)			1			ns
ESD withstand pulses			1000			pulses

© 2023 Littelfuse, Inc.
Specifications are subject to change without notice.
Revised: GD. 03/24/23

PGB2 0201 Series

Surface Mount Polymeric Electrostatic Discharge Suppressors

Environmental Specifications

Item	Test Condition	Reference
Operating Temperature	-40 °C to 85 °C	
Bias Humidity	Rated voltage ,90%RH, 40 °C, 1000 hrs	MIL-STD-202 Method 103
Thermal Shock	-40 °C to 85 °C, 30 min. cycle, 5 cycles	JIS C 0025 (1998) Test Na
High Temperature Load Voltage	Rated voltage, 85 °C 1000 hrs	MIL-STD-202G Method 108
Solder Leach Resistance	260 °C 10s	MIL-STD-202G Method 210F

Part Number List

Part Number	Rated Voltage (Max)
PGB2010201KR-06NR	6 V
PGB2010201KR-12NR	12 V
PGB2010201KR-15NR	15 V
PGB2010201KR-24NR	24 V
PGB2010201KR-30NR	30 V

Soldering Parameters

Reflow Condition		Pb-free assembly
Pre Heat	**- Temperature Min ($T_{s(min)}$)**	150 °C
	- Temperature Max ($T_{s(max)}$)	200 °C
	- Time (Min to Max) (t_s)	60–180 seconds
Average Ramp-up Rate (Liquidus Temp (T_L) to peak)		5 °C / second max.
$T_{S(max)}$ to T_L - Ramp-up Rate		5 °C / second max.
Reflow	**- Temperature (T_L) (Liquidus)**	217 °C
	- Temperature (t_L)	60–150 seconds
Peak Temperature (T_P)		$250^{+0/-5}$ °C
Time within 5°C of actual peak Temperature (t_p)		20 – 40 seconds
Ramp-down Rate		5 °C / second max.
Time 25°C to peak Temperature (T_P)		8 minutes max.

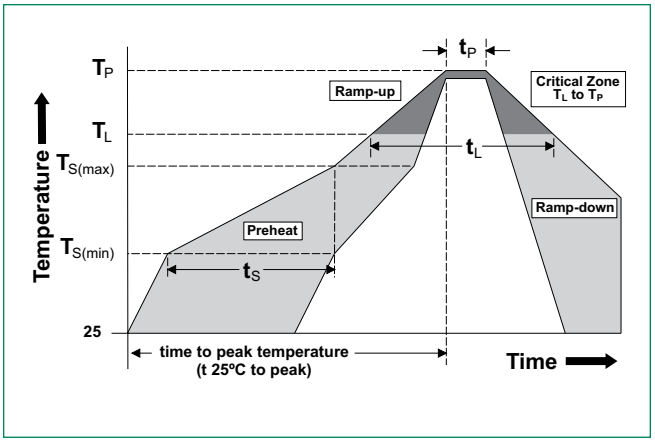

© 2023 Littelfuse, Inc.
Specifications are subject to change without notice.
Revised: GD. 03/24/23

PGB2 0201 Series

Surface Mount Polymeric Electrostatic Discharge Suppressors

Dimensions

Unit: mm

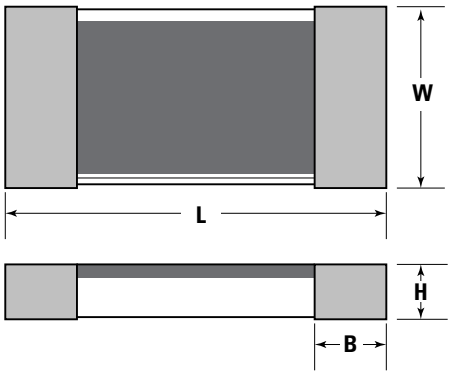

Chip Size	L	W	H	B
0201	0.62±0.05	0.32±0.03	0.3±0.05	0.165±0.05

Recommended Landing Pad

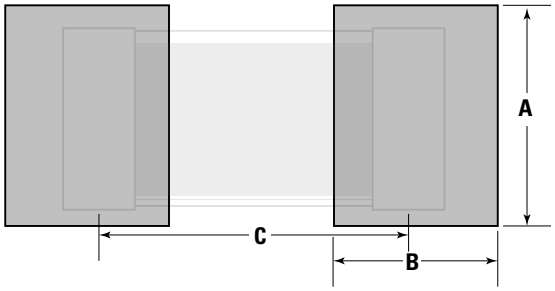

Marking	Unit (mm)
A	0.35±0.05
B	0.27±0.05
C	0.5±0.05

© 2023 Littelfuse, Inc.
Specifications are subject to change without notice.

Revised: GD. 03/24/23

PGB2 0201 Series

Surface Mount Polymeric Electrostatic Discharge Suppressors

Packaging, Tape and Reel Specifications

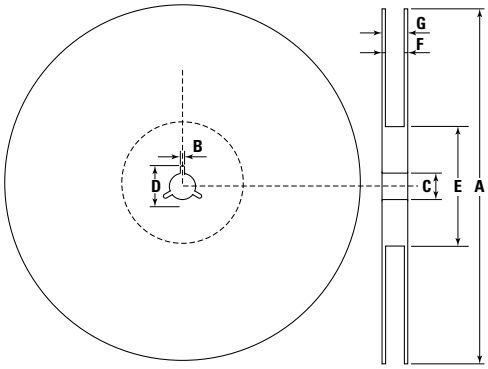

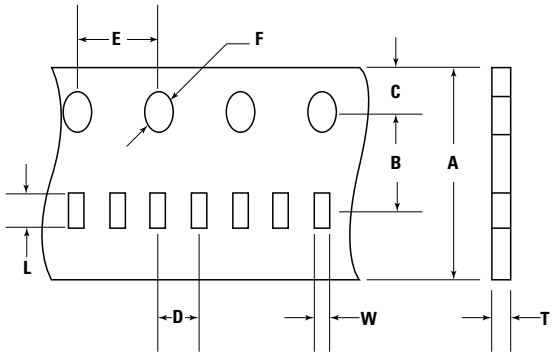

Marking	Unit (mm)
A	178.0±2.0
B	2.0±0.5
C	13.0±0.5
D	21.0±0.8
E	62.0±1.5
F	9.0±0.5
G	13.0±1.0

Marking	Unit (mm)
A	8.00±0.30
B	3.50±0.05
C	1.75±0.05
D	2.00±0.05
E	4.00±0.10
F	1.55±0.05
L	0.68±0.02
W	0.37±0.02
T	0.42±0.02

Part Number	Packaging Code	Quantity	Packaging Option	Packaging Specification
PGB2010201	KR	15000	Tape and Reel (7" reel)	Carrier Tape: 8 mm, paper Reel: 7" (178 mm) reel

Disclaimer Notice - Information furnished is believed to be accurate and reliable. However, users should independently evaluate the suitability of and test each product selected for their own applications. Littelfuse products are not designed for, and may not be used in, all applications. Read complete Disclaimer Notice at http://www.littelfuse.com/disclaimer-electronics.

© 2023 Littelfuse, Inc.
Specifications are subject to change without notice.
Revised: GD. 03/24/23